XTERRA FITNESS

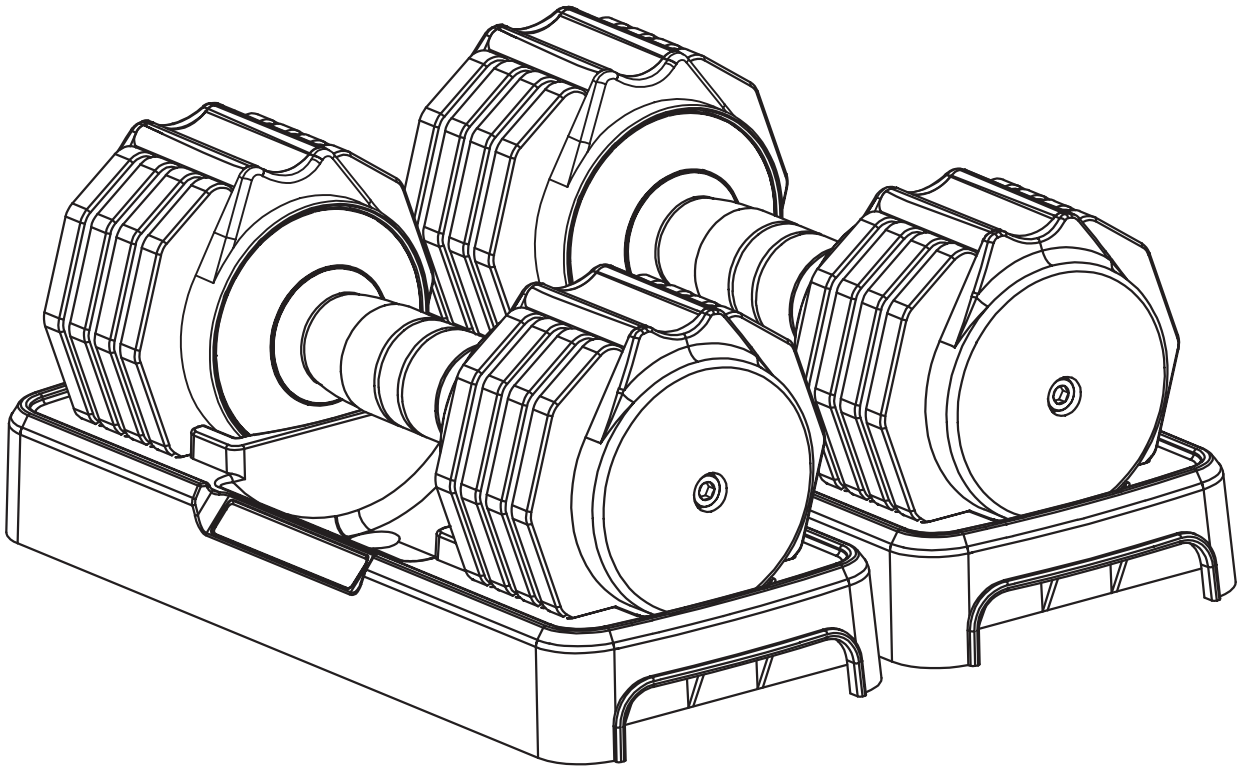

# **12.5 LB** Adjustable Dumbbell Pair
# OWNER'S MANUAL

PLEASE CAREFULLY READ THIS ENTIRE MANUAL BEFORE OPERATING YOUR NEW ADJUSTABLE DUMBBELL

# Table Of Contents


| | |
|---|---|
| Product Registration | **1** |
| Important Safety Instructions | **2** |
| Pack List | **3** |
| Instructions | **4** |
| Troubleshooting | **5** |
| Manufacturer’s Limited Warranty | **6** |
| Exploded View | **7** |
| Parts List | **8** |


**ATTENTION**

THIS ADJUSTABLE DUMBBELL IS INTENDED FOR **RESIDENTIAL USE ONLY** AND IS WARRANTED FOR THIS APPLICATION. ANY OTHER APPLICATION **VOIDS** THIS WARRANTY IN ITS ENTIRETY.

***Congratulations On Your New Adjustable Dumbbell Pair and Welcome to the XTERRA Fitness Family!***

Thank you for your purchase of this quality Adjustable Dumbbell Pair from **XTERRA Fitness**. Your new adjustable dumbbells has been manufactured by one of the leading fitness manufacturers in the world. **XTERRA Fitness** will do all we can to make your ownership experience as pleasant as possible for many years to come. If you have questions, or if parts are missing or damaged, or you require customer service, call (870)336-4286. Please have your model number and serial number handy when you call.

Please take a moment to record where you purchased your equipment, as well as the date of purchase for future reference. We appreciate your confidence in **XTERRA Fitness** and we will always remember that you are the reason that we are in business. Please complete your registration today and enjoy your new adjustable dumbbells.

Yours in Health,
**XTERRA Fitness**

Purchase Location _____

Purchase Date _____

# Product Registration

**Register Your Purchase**
Go to ***www.xterrafitness.com/warranty*** to register online.

# Important Safety Instructions

Read all instructions before using this appliance.

**WARNING** - To reduce the risk of injury to persons:

1. This exercise equipment is not intended for use by persons with reduced physical, sensory or mental capabilities, or lack of experience and knowledge.
2. Use this appliance only for its intended use as described in this manual. Do not use attachments not recommended by the manufacturer.
3. Never drop or insert any object into any opening.
4. The equipment is intended for household use.
5. Before beginning this or any exercise program, consult a physician. This is especially important for persons over the age of 35 or persons with pre-existing health conditions.
6. Keep hands away from all moving parts.
7. Do not attempt to use your equipment for any purpose other than for the purpose it is intended.
8. Wear proper shoes. High heels, dress shoes, sandals or bare feet are not suitable for use on your equipment. Quality athletic shoes are recommended to avoid leg fatigue.
9. Please use the adjustable dumbbells instructions step by step to avoid unnecessary damage to the product.
10. In the event of nausea, shortness of breath, dizziness, headache, chest distress, or any discomfort, stop exercising immediately.
11. In order to achieve significant exercise results and not to overburden the muscles, the exercise frequency should be administered within a reasonable range. Consult a personal trainer to learn correct posture, technique, methods, and frequency.
12. Inspect the equipment thoroughly before each use. Do not use the product with damaged or work components or parts.
13. If the equipment is found to be worn, loose, or rusted, it should be repaired or replaced in a timely manner to ensure that all components are always in good working condition.
14. Please keep pets and children away from equipment. Do not allow children to play near this equipment or use it for any purpose. The minimum age of use for this equipment is 18 years old. Everyone under the age of 18 must be under parental supervision at all times.
15. Do not press the safety lock or turn the weight selector dial when the dumbbell or handle is lifted from the dumbbell tray.
16. Do not drop the dumbbells freely to the ground as it will cause damage to the product. In some cases, dropping the dumbbell freely may potentially cause a personal injury or death.
17. Do not bump the product against any other object as it will damage the product and may potentially cause a personal injury.
18. Do not take the product apart or disassemble any parts. Tampering with the product may potentially cause a personal injury.
19. This product is very heavy. For the highest level of safety place the dumbbell trays and dumbbells on the floor.
20. Use caution while participating in other activities while using your adjustable dumbbell such as watching television, reading, etc. These distractions may cause you to lose balance, resulting in serious injury.



**WARNING:** This product can expose you to chemicals including Toluene and Acrylamide which are known to the State of California to cause cancer and birth defects or other reproductive harm.
For more information go to www.P65Warnings.ca.gov

Failure to follow all guidelines may compromise the effectiveness of the exercise experience, expose yourself (and possibly others) to injury, and reduce the longevity of the equipment.

**SAVE THESE INSTRUCTIONS - THINK SAFETY!**

**CAUTION!! Please be careful when unpacking the carton.**

# **12.5 LB** Adjustable Dumbbell Pack Checklist

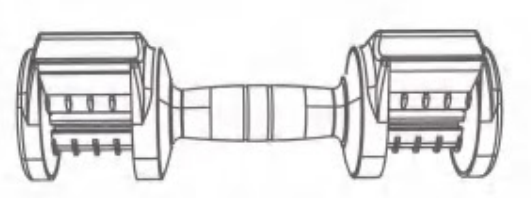

Handle x 2

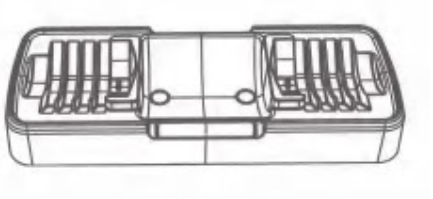

Dumbbell Tray x 2



Weight Plate
X 16

# **12.5 LB** Adjustable Dumbbell

1. Checking the chart below, note the 5 weight increments from 2.5 LB to 12.5 LB or 1.13 KG to 5.67 KG.

| | | | | | |
|---|---|---|---|---|---|
| **LB** | **2.5** | **5** | **7.5** | **10** | **12.5** |
| **KG** | **1.13** | **2.27** | **3.4** | **4.5** | **5.67** |

2. Choose the desired weight by rotating the middle of the handle grip. The handle must be fully inserted into the dumbbell tray to adjust weight. The arrows printed on the handle will show the direction to rotate to choose the desired weight.






3. Remove the handle directly up from the base. The unused plates will remain in the base.

# **12.5 LB** Adjustable Dumbbell Troubleshooting

**Problem**: Adjustment handlebar doesn't turn around while handle is in base.

**Answer**:

a. Ensure the handle is fully inserted into the dumbbell tray base. If not fully inserted, the locking mechanism will not be released.

b. Check to see if any weight plates were put into the wrong grooves or face backwards. All weight plates must have the selection tongue facing away from the handle grip.

# Manufacturer's Limited Warranty

Effective June 16, 2022 - Adjustable dumbbell LIMITED WARRANTY

XTERRA Fitness Inc. warrants all its home use adjustable dumbbell parts for a period of time listed below, from the date of retail sale, as determined by a sales receipt or in the absence of a sales receipt, eighteen (18) months from the original factory shipping date. XTERRA Fitness' responsibilities include providing new or remanufactured parts, at XTERRA Fitness' option, and technical support to our independent dealers and servicing organizations. In the absence of a dealer or service organization, these warranties will be administered by XTERRA Fitness directly to a consumer. The warranty period applies to the following components:

**Home Use Limited Warranty**

Parts

1 Year

**NORMAL RESPONSIBILITIES OF THE CONSUMER**

This warranty applies only to products in ordinary household use. The consumer is responsible for the items listed below:

1. The warranty registration must be completed within 10 days of the original purchase to validate the manufacturer's limited warranty or register online at the XTERRA Fitness website.
2. Proper use of the adjustable dumbbell in accordance with the instructions provided in this manual, including maintenance.
3. Expenses for making the adjustable dumbbell accessible for servicing, including any item that was not part of the adjustable dumbbell at the time it was shipped from the factory.
4. Damages to the adjustable dumbbell finish during shipping, installation or following installation.

**EXCLUSIONS**

This warranty does not cover the following:

1. CONSEQUENTIAL, COLLATERAL, OR INCIDENTAL DAMAGES SUCH AS PROPERTY DAMAGE AND INCIDENTAL EXPENSES RESULTING FROM ANY BREACH OF THIS WRITTEN OR ANY IMPLIED WARRANTY. Note: Some states do not allow the exclusion or limitation of incidental or consequential damages, so this limitation or exclusion may not apply to you.
2. Service call reimbursement to the consumer. Service call reimbursement to the dealer that does not involve malfunction or defects in workmanship or material, for units that are beyond the warranty period, for units that are beyond the service call reimbursement period, for adjustable dumbbells not requiring component replacement, or adjustable dumbbells not in ordinary household use.
3. Damages caused by services performed by persons other than authorized XTERRA Fitness service companies, use of parts other than original XTERRA Fitness parts, or external causes such as alterations, modifications, abuse, misuse, accident, improper maintenance, or acts of God.
4. Products with original serial numbers that have been removed or altered.
5. Products that have been; sold, transferred, bartered, or given to a third party.
6. Products that are used as store display models.
7. Products that do not have a warranty registration on file at XTERRA Fitness Inc. XTERRA Fitness reserves the right to request proof of purchase if no warranty record exists for the product.
8. Product use in any environment other than a residential setting.
9. THIS WARRANTY IS EXPRESSLY IN LIEU OF ALL OTHER WARRANTIES EXPRESSED OR IMPLIED, INCLUDING THE WARRANTIES OF MERCHANTABILITY AND/OR FITNESS FOR A PARTICULAR PURPOSE.

**SERVICE**

Keep your bill of sale. Twelve (12) months from the date on the bill of sale or eighteen (18) months from the date of factory shipping as determined by the serial number establishes the warranty period should service be required. If service is performed, it is in your best interest to obtain and keep all receipts. This written warranty gives you specific legal rights. You may also have other rights that vary from state to state. Service under this warranty must be obtained by following these steps, in order:

1. Contact your selling authorized XTERRA Fitness dealer. OR
2. Contact your local authorized XTERRA Fitness service organization.
3. If there is a question as to where to obtain service, contact our service department at (870)336-4286.
4. XTERRA Fitness' obligation under this warranty is limited to repairing or replacing, at XTERRA Fitness' option, the product through one of our authorized service centers. All repairs must be preauthorized by XTERRA Fitness. If the product is shipped to a service center freight charges to and from the service center will be the customer's responsibility. For replacement parts shipped while the product is under warranty, the customer will be responsible for shipping and handling charges. For in-home service, the customer will be responsible for a trip charge. There will be an additional trip charge if the customer is located over 100 miles from the nearest service center.
5. The owner is responsible for adequate packaging upon return to XTERRA Fitness. XTERRA Fitness is not responsible for damages in shipping. Make all freight damage claims with the appropriate freight carrier. DO NOT SHIP ANY UNIT TO OUR FACTORY WITHOUT A RETURN AUTHORIZATION NUMBER. All units arriving without a return authorization number will be refused.
6. For any further information, or to contact our service department by mail, send your correspondence to:

**XTERRA Fitness, Inc.**
**P.O. Box 2037**
**Jonesboro, AR 72402-2037**

Product features or specifications as described or illustrated are subject to change without notice. All warranties are made by XTERRA Fitness, Inc. This warranty applies only in the 48 contiguous United States. NOTE: This does not apply to Alaska or Hawaii.

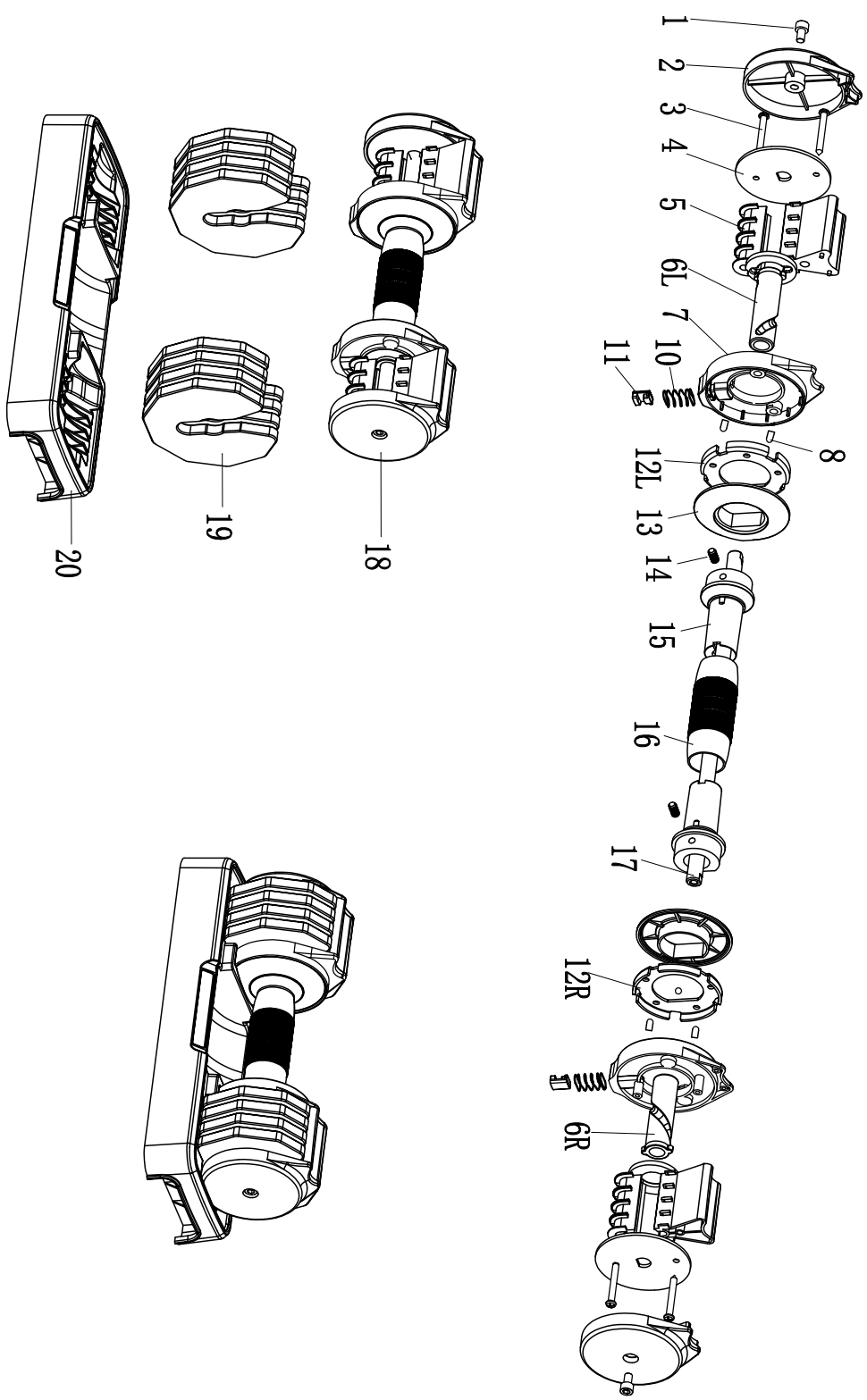
1
2
3
4
5
6L
7
10
11
8
12L
13
14
15
16
17
12R
6R
18
19
20

| 12.5LB SPARE PARTS LIST | | | |
|---|---|---|---|
| S/N | DESCRIPTION | SPEC | QTY |
| 1 | Round head inner hexagon screw | M6*16 | 4 |
| 2 | Handle cover | 81*13.5 | 4 |
| 3 | Self tapping screw | M4*40 | 8 |
| 4 | Outer side stator | 75*2.5 | 4 |
| 5 | Dumbbell plate limit assembly | 82*57 | 4 |
| 6L | Spiral inner sleeve left | 19.2*68.6 | 2 |
| 6R | Spiral inner sleeve right | 19.2*68.6 | 2 |
| 7 | Lock cover | 80*15.2 | 4 |
| 8 | Ball Plunger | | 8 |
| 10 | Square spring | 11*6.2*12*0.7 | 4 |
| 11 | Lock | 11.5*6.4*13 | 4 |
| 12L | Locating ring left | 70*2 | 2 |
| 12R | Locating ring right | 70*2 | 2 |
| 13 | Handle inner cover (dial) | 75*12.5 | 4 |
| 14 | Ball screw | M6*10 | 4 |
| 15 | Handle connecting set | 42*70 | 4 |
| 16 | Handle tube | 34*92 | 2 |
| 17 | Handle bar | 12*258 | 2 |
| 18 | Handle | | 2 |
| 19 | Dumbbell plate | 0.55Kg | 16 |
| 20 | Base | 308*122*40 | 2 |

3000 Nestle Road Jonesboro, AR 72401 - Phone:870-336-4286 - Fax:870-935-7611



©2022 All RIghts Reserved. 