XTERRA® FITNESS

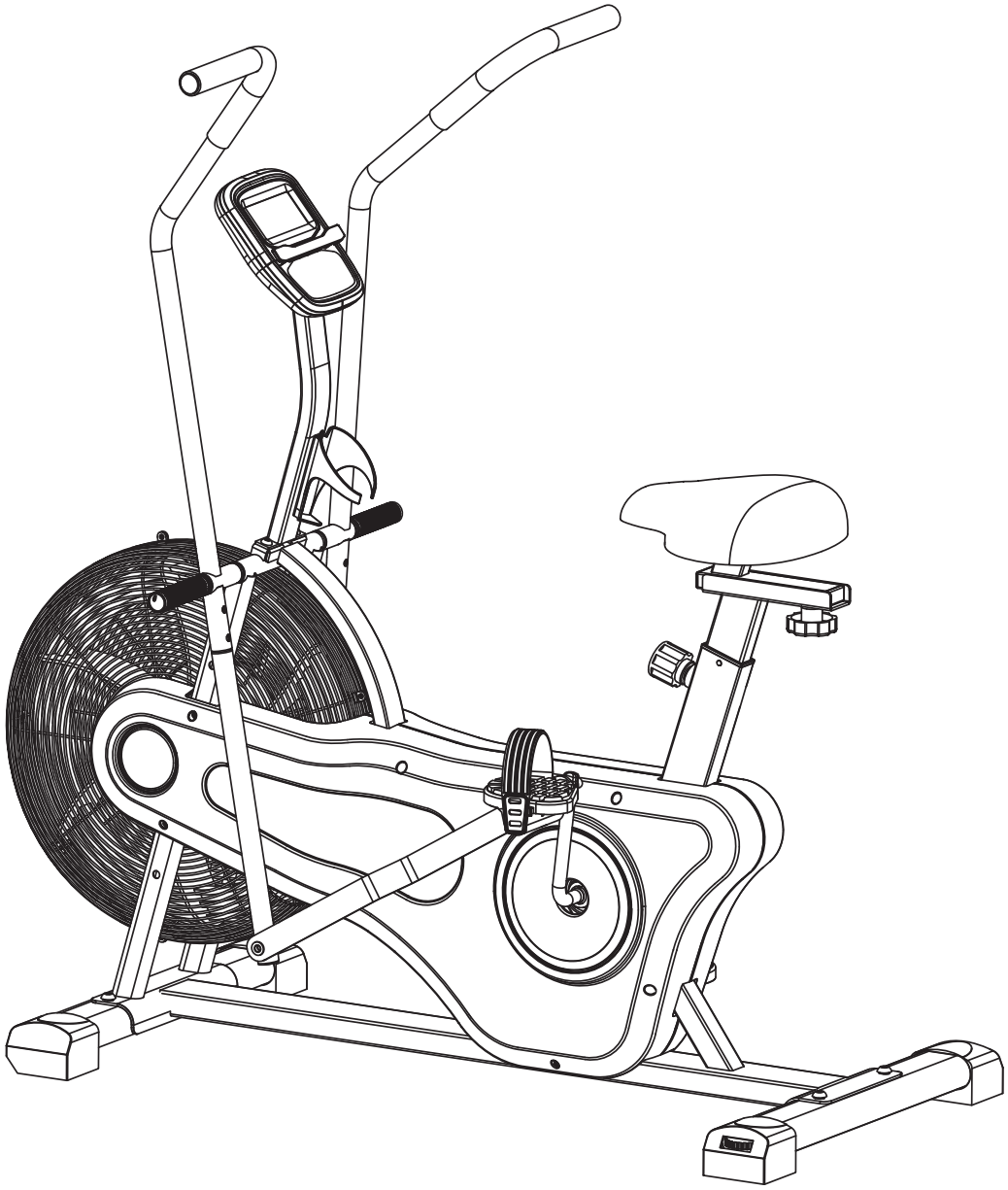

AIR350 Airbike
OWNER'S MANUAL

PLEASE CAREFULLY READ THIS ENTIRE MANUAL BEFORE OPERATING YOUR NEW AIRBIKE.

Table Of Contents

Product Registration	**1**
Important Safety Instructions	**2**
Important Operation Instructions	**3**
AIR350 Assembly Instructions	**4**
Final Preparations	**13**
Exploring Your New Bike	**14**
Troubleshooting	**15**
Manufacturer’s Limited Warranty	**16**

WARRANTY COMPLIANCE

THIS INDOOR CYCLE IS INTENDED FOR RESIDENTIAL USE ONLY AND IS WARRANTED FOR THE APPLICATION. ANY OTHER APPLICATION VOIDS THIS WARRANTY IN ITS ENTIRETY.

Congratulations On Your New Airbike and Welcome to the XTERRA Fitness Family!

Thank you for your purchase of this quality indoor cycle. Your new Airbike has been manufactured by one of the leading fitness manufacturers in the world and is backed by one of the most comprehensive warranties available. **XTERRA Fitness** will do all we can to make your ownership experience as pleasant as possible for many years to come.

If you have questions, or if parts are missing or damaged, or you require customer service, call (870) 333-5500. Please have your model number and serial number handy when you call.

Please take a moment to record where you purchased your machine, as well as the date of purchase for future reference. We appreciate your confidence in **XTERRA Fitness** and we will always remember that you are the reason that we are in business. Please complete and mail your registration card today and enjoy your new Airbike.

Yours in Health,
XTERRA Fitness

Purchase Location _____

Purchase Date _____

Product Registration

Record Your Serial Number
Please record the Serial Number of this fitness product in the space provided below.

Serial Number _____

Register Your Purchase
The self-addressed product registration card must be completed in full and returned to **XTERRA Fitness**. You can also go to ***www.xterrafitnessstore.com/warrantyreg.html*** to register online.

AIR350_20200424
Version 5.0

Important Safety Instructions

WARNING - Read all instructions before using this appliance.

1. Use this equipment only for its intended use as described in this manual. Do not attempt to ride this bike at high pedal speeds until you have ridden the bike for some time and are comfortable riding at slower pedal speeds.
2. Wait for flywheel to coast to a stop before dismounting the bike.
3. Serious injury or death may occur from over-training. Consult a medical doctor or qualified fitness instructor to determine an exercise program appropriate for your level of fitness.
4. Do not attempt to turn the pedal cranks by hand. Do not touch any driving mechanism while it is in motion as possible injury could occur.
5. In a home setting, keep children away from the bike when it is not in use. Keep children and pets away from the unit while it is in use.
6. Do not attempt to perform dip movements on handlebars.
7. Never drop or insert any object into any opening of the bike.
8. Only use the bike on a stable, level floor.
9. Follow instructions for safe use of the equipment including proper seat position, handlebar position, and use of foot positioning system of pedals. Do not attempt to pull up handlebar post and seat post over the 'MAX.' graduation.
10. For safe operation, allow for at least 1 foot (30cm) of free space to either side of the unit and 2 feet (60cm) of free space to the rear of the unit.
11. Weight Limit: 250 lbs.

Regularly examine the bike for damage and wear. Inoperable components should be replaced immediately or the equipment should not be used until it is repaired.

Failure to follow all guidelines may compromise the effectiveness of the exercise experience, expose yourself (and possibly others) to injury, and reduce the longevity of the equipment.



WARNING: This product can expose you to chemicals including Toluene and Acrylamide which are known to the State of California to cause cancer and birth defects or other reproductive harm.
For more information go to www.P65Warnings.ca.gov

SAVE THESE INSTRUCTIONS - THINK SAFETY!

Important Operation Instructions

WARNING - AS THE OWNER OF THIS EXERCISE EQUIPMENT, YOU SHOULD INSIST THAT ALL USERS FOLLOW THE SAME GUIDELINES: YOU SHOULD MAKE THIS MANUAL AVAILABLE TO ALL USERS.

1. Obtain a complete physical examination from your medical doctor and enlist a health/ fitness professional's aid in developing an exercise program suitable for your current health status.
2. When working out for the first time, start out slowly for a minimum of five minutes. After your muscles are warmed up, gradually increase the pedaling speed and/or resistance.
3. The speed and duration of your exercise program should always be subject to how you feel. Never permit peer pressure to exceed your personal judgment while exercising.
4. This exercise equipment is not intended for use by persons with reduced physical, sensory or mental capabilities, or lack of experience and knowledge.
5. Overweight or severely de-conditioned individuals should be particularly cautious when using the equipment for the first time. Even though such individuals may not have histories of serious physical problems, they may perceive the exercise to be far less intense than it really is, resulting in the possibility of overexertion or injury.
6. Proper installation and regular maintenance are required to ensure user's safety. Maintenance is the sole responsibility of the owner.

AIR350 Assembly Pack Checklist

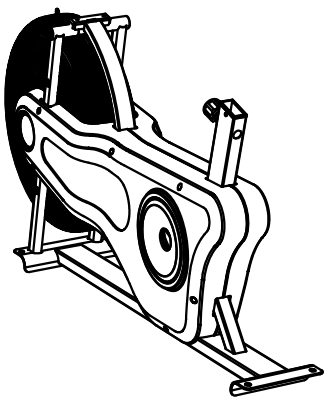

NO.1



NO.5



NO.25



NO.11

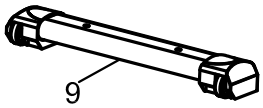

NO.9

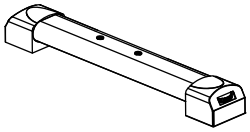

NO.10

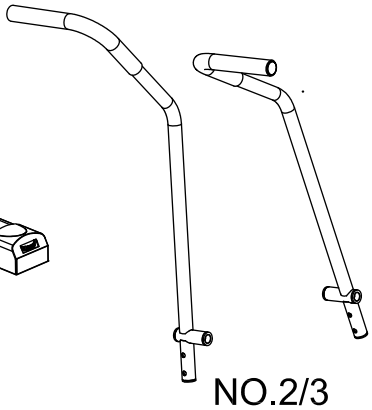

NO.2/3

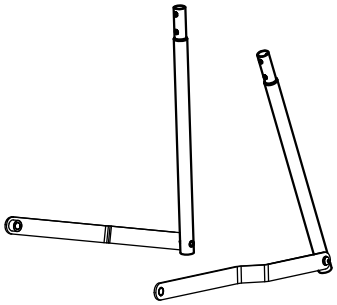

NO.4



NO.59

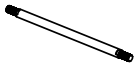

NO.80

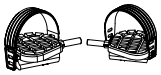

NO.14/15

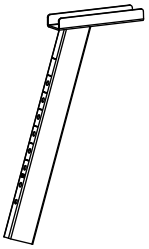

NO.6



NO.7



NO.19

AIR350 Assembly Pack Checklist

Part No.	Description	Q'TY
1	*Main Frame*	*1*
2/3	*Handrail Arm*	*1/1*
4	*Lower Handrail Arm*	*2*
5	*Upright Post*	*1*
6	*Seat Post*	*1*
7	*Seat Slider*	*1*
9	*Front Stabilizer*	*1*
10	*Rear Stabilizer*	*1*
11	*Computer*	*1*
14/15	*Foot Pedal*	*1/1*
19	*Seat*	*1*
25	*Cup Holder*	*1*
59	*Foot Pegs*	*2*
80	*Moving Shaft*	*1*
	User Manual	*1*
	Hardware Parts	*1*

AIR350 Assembly Pack Checklist

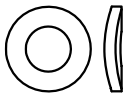

M8 Arc Washer
#89-4PCS



M8 Washer
#69-4PCS

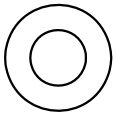

M10 Washer
#77-1PC

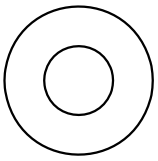

M14 Washer
#72-4PCS

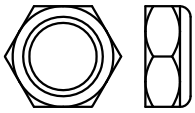

Right Lock Nut
#74-1PC

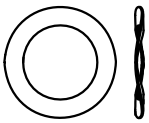

M14 Wave Washer
#92-4PCS

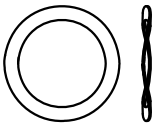

M16 Wave Washer
#61-2PCS



M8 Lock Nut
#71-4PCS

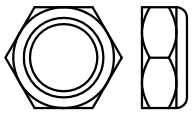

Left Lock Nut
#75-1PC



M5x12 Screw
#58-4PCS
(Packed w/
Console)



ST4.2x16 Screw
#55-2PCS

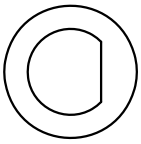

D Washer
#35-2PCS

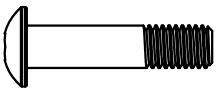

M8x35 Screw
#76-4PCS



M8 Spring washer
#88-4PCS



M8x10 Screw
#90-2PCS

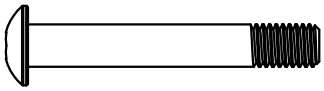

M8x55 Screw
#57-4PCS

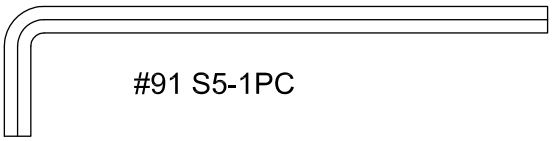

#91 S5-1PC

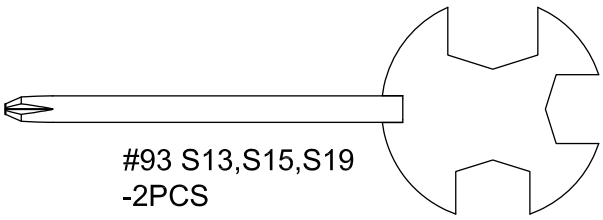

#93 S13,S15,S19
-2PCS

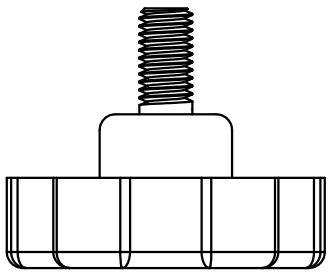

#22 Knob-1PC

1 Upright and Console

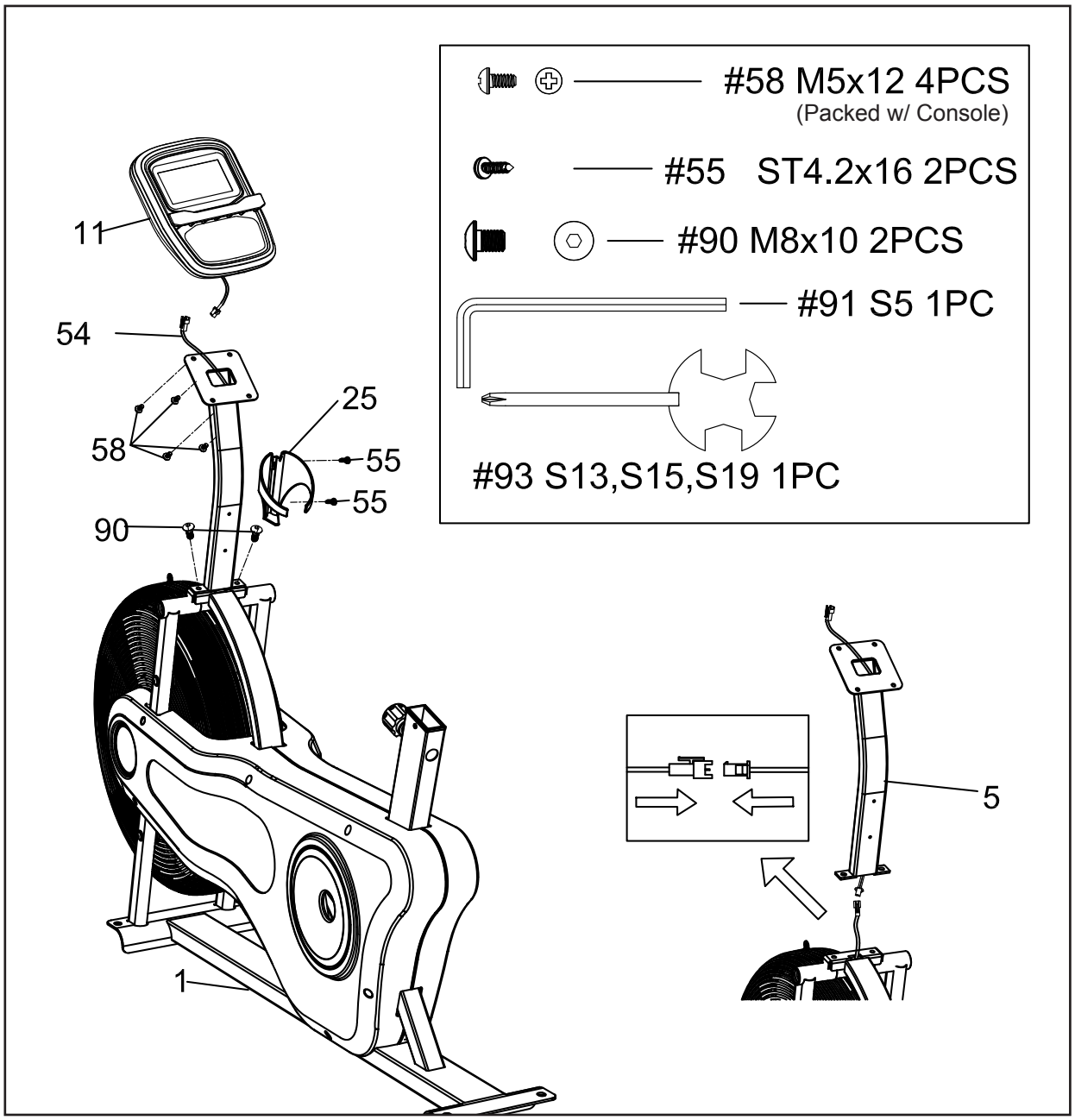

1. Place 2 AAA batteries into the Console (11).
2. Taking Upright Post (5) connect the Upper wire and Lower Wire. Be sure to not pinch the wires or you may damage the cable.
3. Using 2 Screws (90) attach the Upright Post to the Main Frame (1).
4. Using 2 Screws (55) attach the Cup Holder (25) to the Upright Post (5).
5. Connect the Connection Wire (54) at the top of the Upright Post (5) to the wire of the Console (11). Feed any extra length of wire back into the Upright Post(5), then use 4 Screws (58) to mount the Console (11) to the Upright Post (5).

2 Attaching the Stabilizers

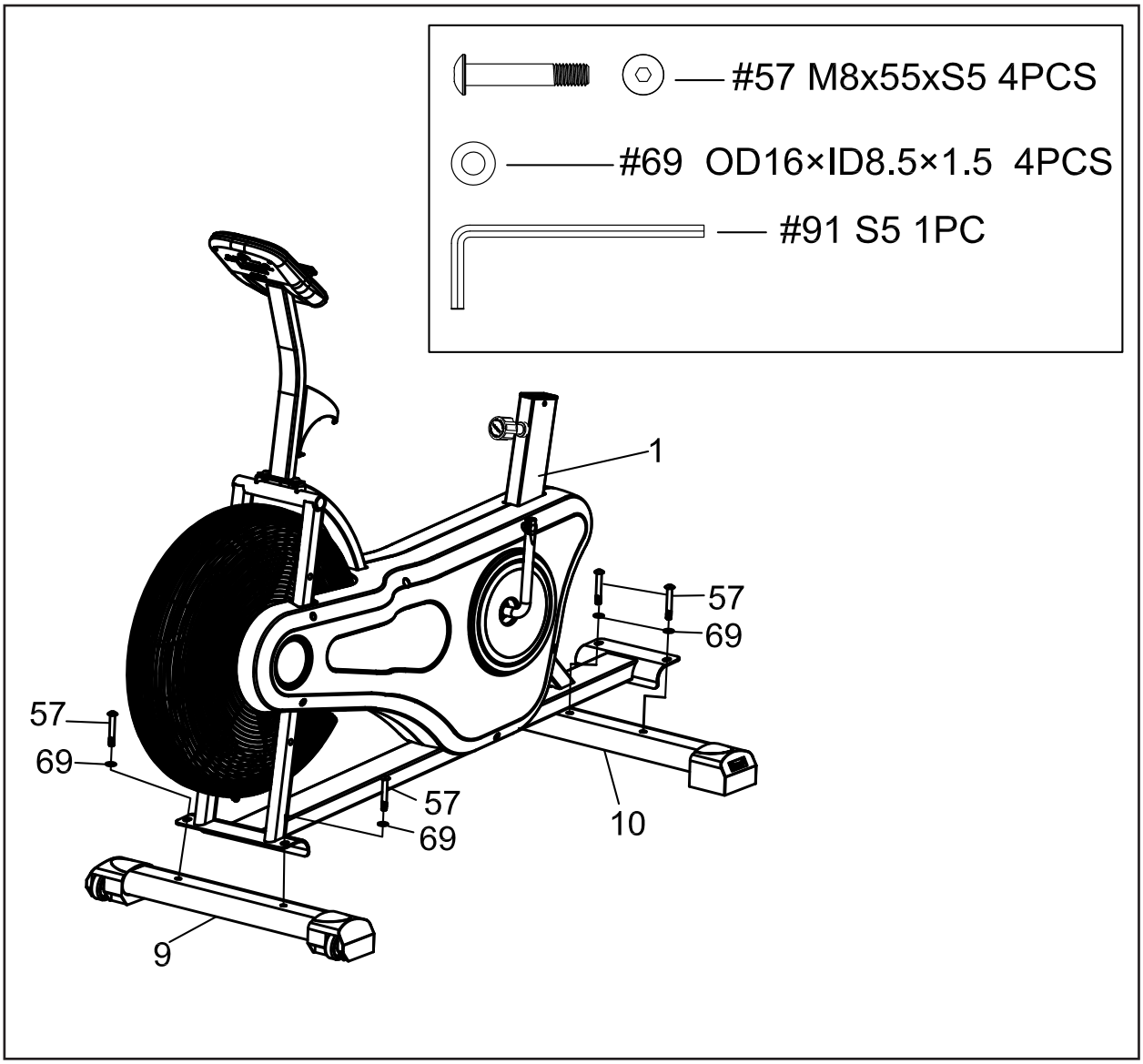

1. Using 2 sets of Screws (57) and M8 Washers (69) attach the Front Stabilizer (9) to the Main Frame (1).
2. Repeat the same steps to attach the Rear Stabilizer (10) to the Main Frame (1).

3 Left & Right Handlebars

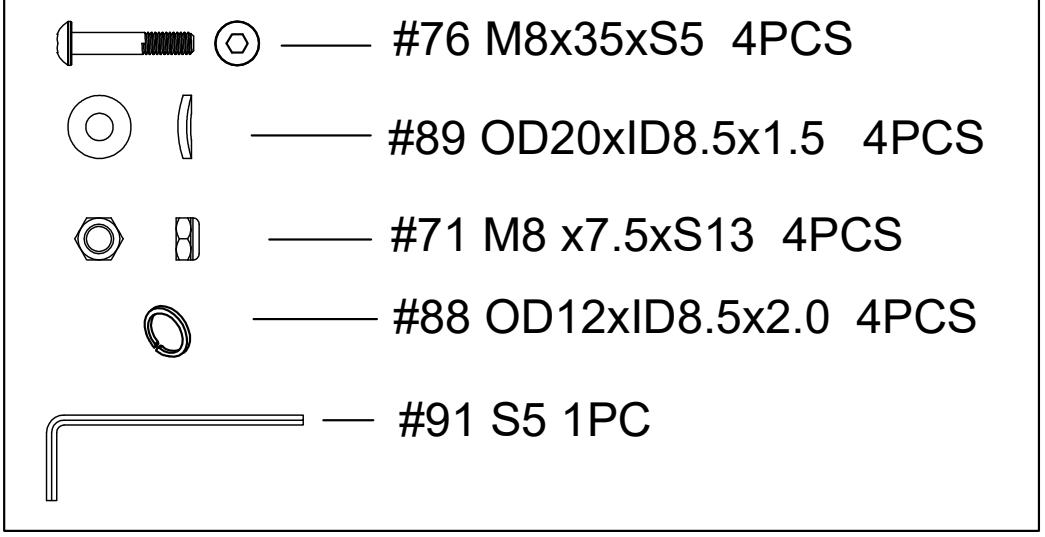

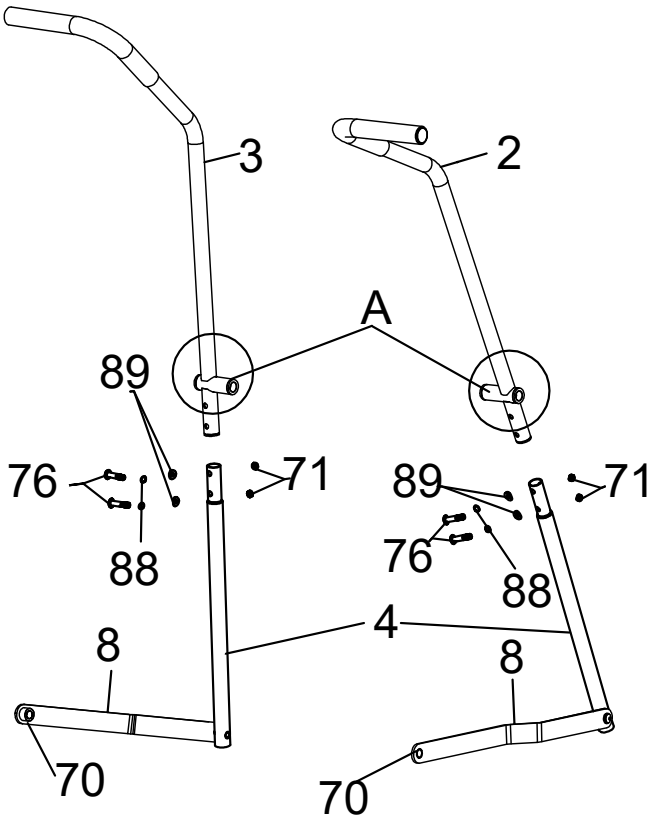

1. Using 2 Screws (76), 2 Arc Washers (89), and 2 Spring Washers (88) attach the Left Handrail Arm (3) to the Lower Handrail Arm (4). Then secure with 2 Nylon Nuts (71).
2. Repeat this process to attach the parts of the Right Handrail Arm (2).
   Note: When connecting the Upper Arms to the Lower Arms the Powder Washer (70) is on the outside of the arms, And the connection points labeled “A” in the diagram above should face inwards towards each other.

4 Connecting the Handlebars

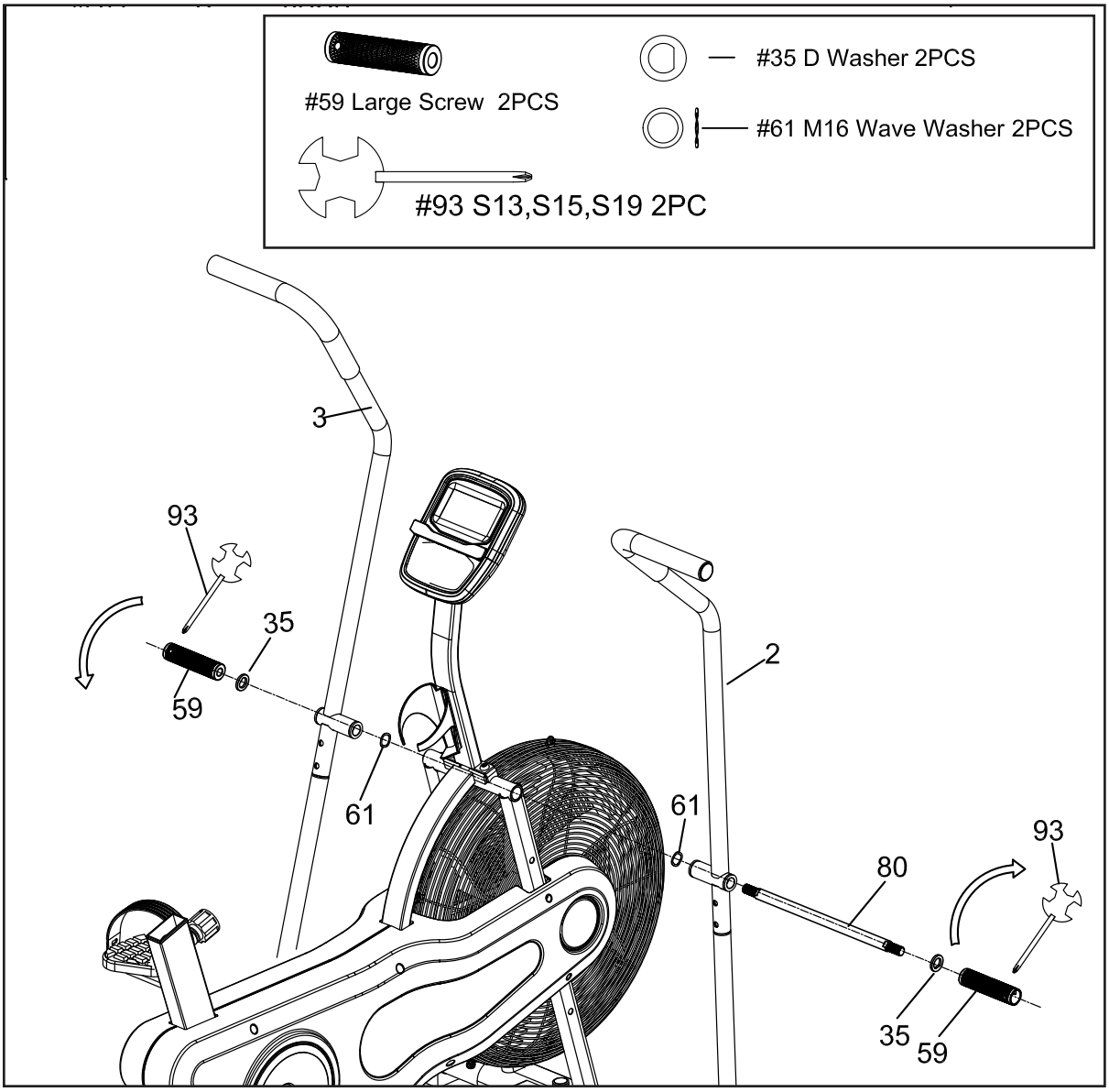

1. Apply a thin layer of the included grease all around the non-threaded length of the Moving Shaft (80) before assembly. This will allow the Moving Shaft (80) to assemble more easily and to turn smoothly during workouts.
2. Slide the Moving Shaft (80) through the Left & Right Handrail Arms (3 & 2) with 1 Wave Washer (61) placed between each arm and the main frame as shown in the diagram.
3. Slide 1 D Washer (35) onto the end of each side of the Moving Shaft (80).
4. Screw the Foot Pegs (59) onto each end of the Moving Shaft (80) as shown in the diagram. Use both Wrenches (93) by sliding the screw driver portion of the Wrench (93) through the hole in the end of the Foot Pegs (59) – this will help provide you more torque to tighten the Foot Pegs (59) onto the Moving Shaft (80). At the same time, tighten both sides firmly in the direction shown in the diagram.

5 Foot Pedals

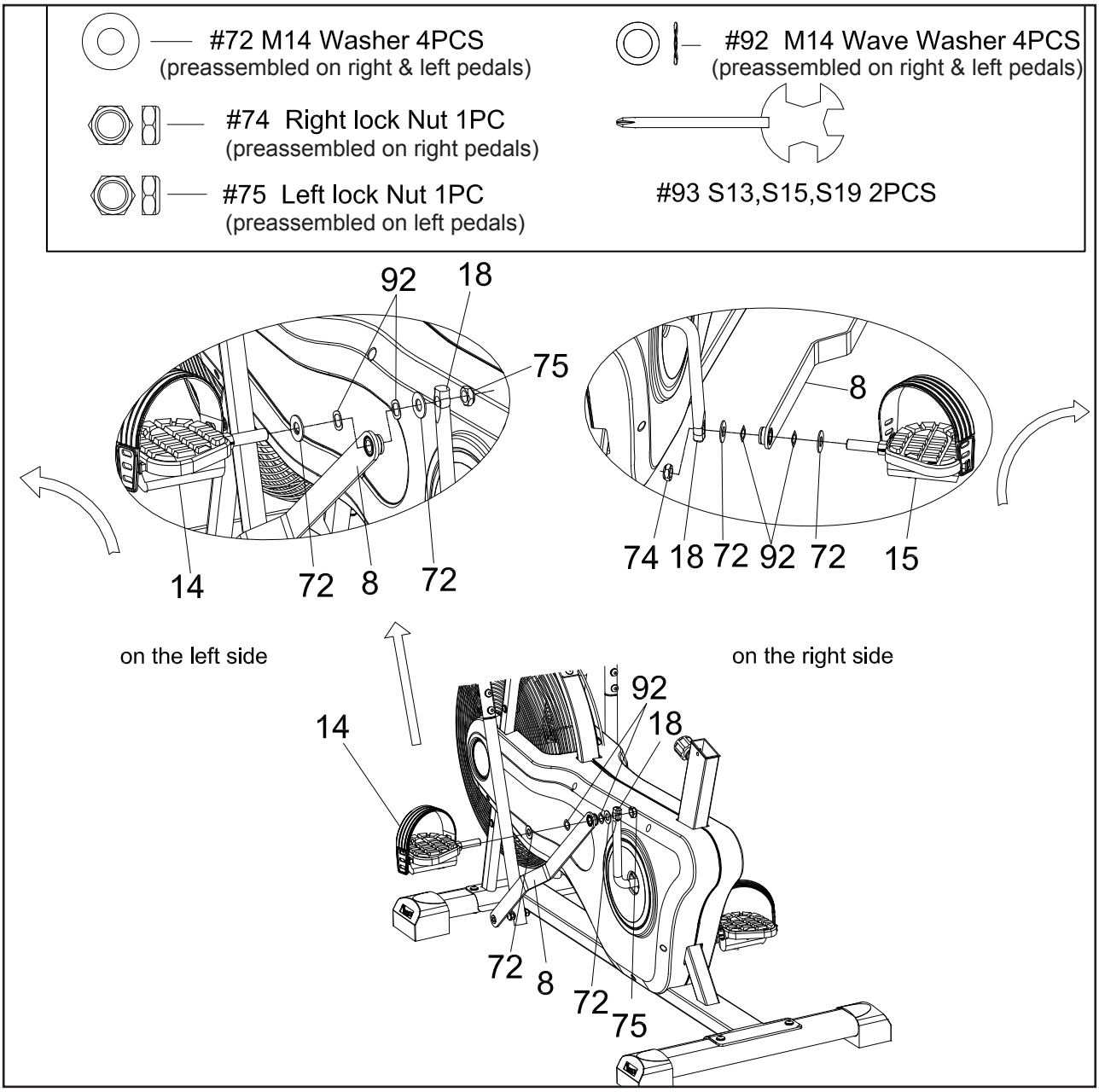

1. The Left Pedal (14) and the Left Lock nut (75) have reverse threading and have to be turned counter clockwise to tighten. Apply some of the included grease to the bolt of Left and Right foot pedal (14&15) before assembly. Turn the Belt pulley with Crank (18) to the front to make it horizontal.
2. Insert the Left Foot pedal (14) through the Washer (72), Wave washer (92), the Connection piece (8) and into the Crank. Turn the Left pedal (14) counter clockwise as tightly as you can with your hands. Make sure the bolt on the Left pedal (14) penetrates the crank fully. Lock the Left pedal (14) with the Left Lock nut (75). Finish tightening with the Wrench (93).
3. Repeat on the Right side making sure to turn the pedal clockwise.

6 Dis-assembling and Assembling the Seat

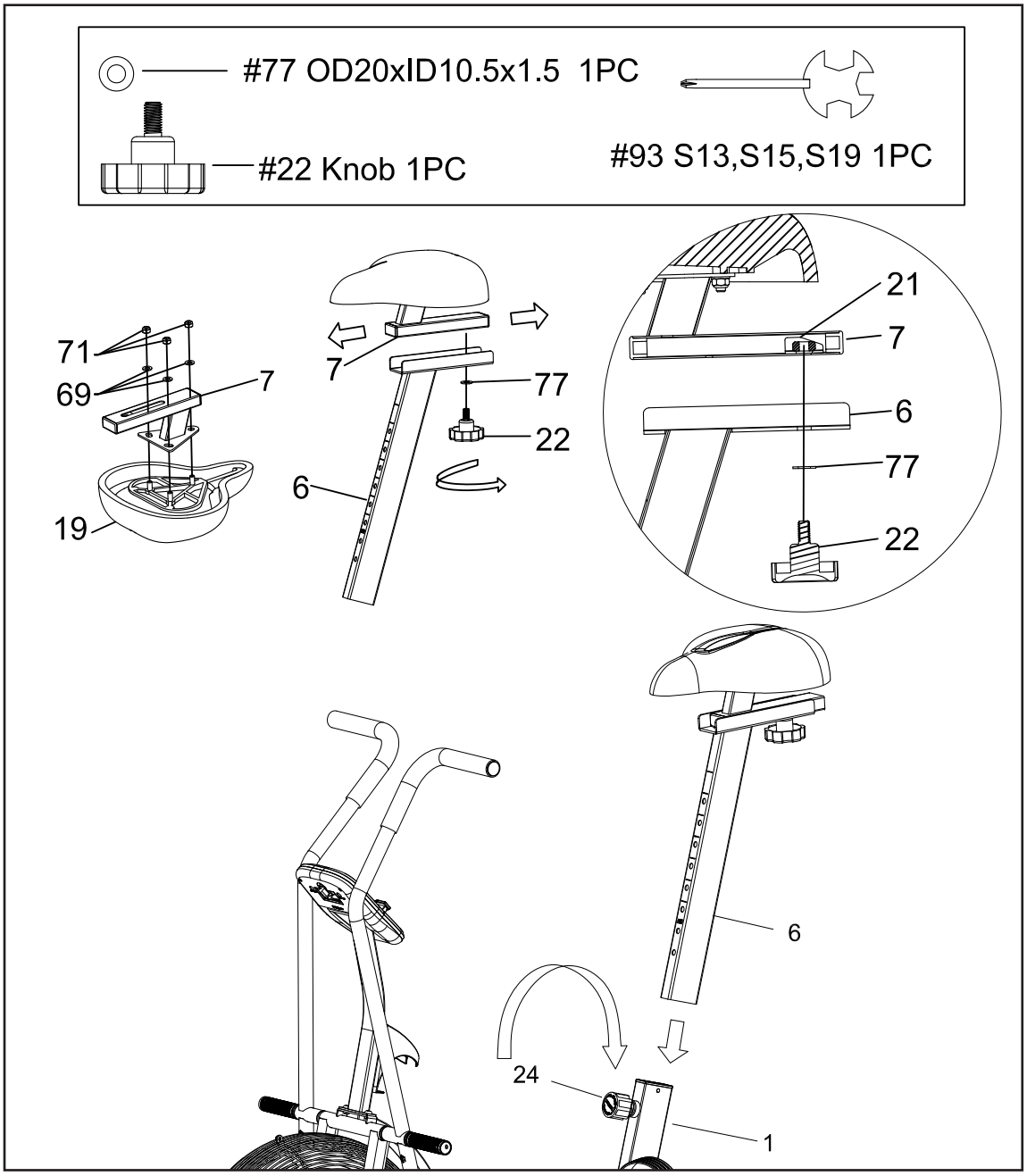

1. Unscrew 3 Washers (69) and 3 Nylon Nuts (71) from the Seat (19) using the Wrench (93).
2. Attach the Seat (19) to the Seat Slider (7) with Washers (69) and Nylon Nut (71).
3. Attach the Seat Slider (7) to the Seat Post (6) with Knob (22) and M10 Washer (77).
4. Insert the Seat Post (6) into the Main Frame (1) and lock it at desired height with the Adjustment Knob (24).

CHECK ALL BOLTS AND NUTS ARE TIGHTENED BEFORE USING THE MACHINE.

Final Preparations

• Tighten all bolts/nuts securely to complete your installation.

• Adjust all four feet so your unit sits flat on the ground for a stable ride. If placing on a mat or on carpet, then it may take time for your unit to settle into the floor padding and will not feel as stable as if placed on a hard surface.

• Make sure to tighten both pedals securely to the pedal crank arms as instructed.

• Once proper seat and handlebar height is selected, make sure to tighten securely for a solid feel.

Adjusting The Bike For A Proper Fit

Take some time to learn how to properly adjust the bike to your body; it will make your workouts more pleasant and a safer experience, too. Riding the bike when it is incorrectly adjusted can result in discomfort and increase your risk of injury.

Adjustment Of Seat Position

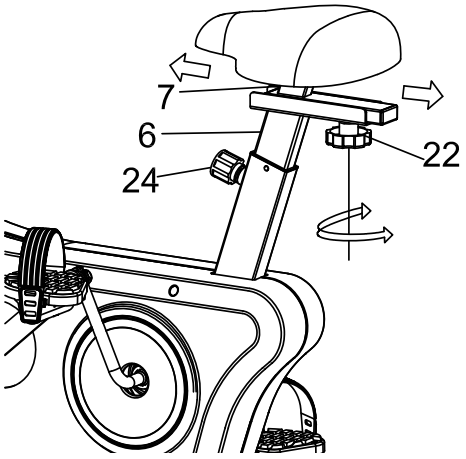

Seat Height Adjustment

1. Standing next to the bike, adjust the seat until it is about hip height.
2. Rotate the crank arms until the pedals are in the vertical position: 12 and 6 o'clock.
3. Place your foot on the pedal closest to the floor and mount the bike. Ensure that the ball of your foot is over the center of the pedal. Your leg should be slightly bent at the knee, about 5 degrees.
4. If your leg is too straight or your foot cannot touch the pedal you will need to lower the seat height. If your leg is bent too much, you will need to raise the seat height.
5. Dismount the bike. Then loosen the knob on the seat post and adjust up or down as necessary.
6. When the seat is in the desired position, tighten the quick release to secure the seat post.
7. Note the final position mark on the seat post for future reference.

Seat Forward/Back Adjustment

8. Sit on the bike with the crank arms in the 3 and 9 o'clock positions. A proper forward/back position (for road bike training) of the seat is achieved when the small bump at the top of your shin is above the pedal axle.
9. Dismount the bike. Loosen the knob under the seat and slide the seat forward or backward as desired; tighten the knob.

Exploring Your New Bike

Getting Familiar with the Control Panel

AIR350 Console



Functions	TIME	0:00 ~ 99:59 (Minute:Second)
	SPEED	0 ~ 999.9 K per hour
	CALORIES	0.0 ~ 999.99 ~ 9999 Kcal
	DISTANCE	0.1 ~ 999.9 K
BATTERY TYPE		(2) Two AAA
OPERATING TEMPERATURE		0˚C ~ 40˚C; 32˚F ~ 104˚F
STORAGE TEMPERATURE		-10˚C ~ 60˚C; 14˚F ~ 140˚F

Button Functions

MODE: Press to select functions. Press the button and hold for two seconds to reset all functions to zero, except ODOMETER.

SET: In the STOP mode, press to set target values for TIME, CALORIES, and DISTANCE. Press the button and hold for two seconds. The value will increase automatically even if you are not holding the SET button. Press any button to stop.

RESET: In the STOP mode, press the button to reset the setting values to zero.

Press the RESET button and hold for two seconds to reset all functions to zero, except ODOMETER.

Key Functions

Button Functions

SCAN: Press the MODE button until “SCAN” appears on display. The console displays TIME, CALORIES, ODOMETER, SPEED, and DISTANCE in a sequence for 6 seconds at a time.

TIME: Displays the time elapsed or can count down from preset value.

CALORIES: Displays the calories burned or can count down from preset value.

The calorie readout is an estimate for an average user. It should be used only as comparison between workouts on this unit.

ODOMETER: Display the total accumulated distance you have traveled. The odometer does not reset unless you remove the batteries.

SPEED: Displays the current speed.

DISTANCE: Displays distance or can count down from preset value.

The Console turns on when you start pedaling or when you press a key.
The Console turns off automatically after 4 minutes of inactivity.

Countdown Function

You can preset values to countdown TIME, CALORIES or DISTANCE. Press MODE until the function you want is displayed. Make sure meter is not in SCAN. Press SET to increase the value. If you press SET and hold for a few seconds, the value will increase automatically. Press any key to stop at a value.

Troubleshooting

Problem	Solution
When display shows all 0’s, faded numbers, incomplete numbers or blank screen	• Remove the computer and check the wire that comes from the computer is properly connected to the wire that comes from the upright. • Check that the batteries are correctly positioned and are in proper contact with the battery springs. • The batteries in the computer may be dead. Remove and replace with new batteries.

Manufacturer's Limited Warranty

Effective April 24, 2020 - AIR350 Airbike LIMITED WARRANTY

XTERRA Fitness Inc. warrants all its home use Airbike parts for a period of time listed below, from the date of retail sale, as determined by a sales receipt or in the absence of a sales receipt, eighteen (18) months from the original factory shipping date. XTERRA Fitness's responsibilities include providing new or remanufactured parts, at XTERRA Fitness's option, and technical support to our independent dealers and servicing organizations. In the absence of a dealer or service organization, these warranties will be administered by XTERRA Fitness directly to a consumer. The warranty period applies to the following components:

Home Use Limited WARRANTY

Frame	Parts	Labor
1 Year	1 Year	None

NORMAL RESPONSIBILITIES OF THE CONSUMER

This warranty applies only to products in ordinary household use. The consumer is responsible for the items listed below:

1. The warranty registration card must be completed and returned to the address listed on the card within 10 days of the original purchase to validate the manufacturer's limited warranty or register online at http://www.xterrafitnessstore.com/warrantyreg.html.
2. Proper use of the Airbike in accordance with the instructions provided in this manual, including maintenance.
3. Proper connection to a power supply of sufficient voltage, replacement of blown fuses, repair of loose connections or defects in house/facility wiring.
4. Expenses for making the Airbike accessible for servicing, including any item that was not part of the Airbike at the time it was shipped from the factory.
5. Damages to the Airbike finish during shipping, installation or following installation.

EXCLUSIONS

This warranty does not cover the following:

1. CONSEQUENTIAL, COLLATERAL, OR INCIDENTAL DAMAGES SUCH AS PROPERTY DAMAGE AND INCIDENTAL EXPENSES RESULTING FROM ANY BREACH OF THIS WRITTEN OR ANY IMPLIED WARRANTY. Note: Some states do not allow the exclusion or limitation of incidental or consequential damages, so this limitation or exclusion may not apply to you.
2. Service call reimbursement to the consumer. Service call reimbursement to the dealer that does not involve malfunction or defects in workmanship or material, for units that are beyond the warranty period, for units that are beyond the service call reimbursement period, for Airbikes not requiring component replacement, or Airbikes not in ordinary household use.
3. Damages caused by services performed by persons other than authorized XTERRA Fitness service companies, use of parts other than original XTERRA Fitness parts, or external causes such as alterations, modifications, abuse, misuse, accident, improper maintenance, inadequate power supply, or acts of God.
4. Products with original serial numbers that have been removed or altered.
5. Products that have been; sold, transferred, bartered, or given to a third party.
6. Products that are used as store display models.
7. Products that do not have a warranty registration on file at XTERRA Fitness, Inc. XTERRA Fitness reserves the right to request proof of purchase if no warranty record exists for the product.
8. Product use in any environment other than a residential setting.
9. THIS WARRANTY IS EXPRESSLY IN LIEU OF ALL OTHER WARRANTIES EXPRESSED OR IMPLIED, INCLUDING THE WARRANTIES OF MERCHANTABILITY AND/OR FITNESS FOR A PARTICULAR PURPOSE.

SERVICE

Keep your bill of sale. Twelve (12) months from the date on the bill of sale or eighteen (18) months from the date of factory shipping as determined by the serial number establishes the warranty period should service be required. If service is performed, it is in your best interest to obtain and keep all receipts. This written warranty gives you specific legal rights. You may also have other rights that vary from state to state. Service under this warranty must be obtained by following these steps, in order:

1. Contact your selling authorized XTERRA Fitness dealer. OR
2. Contact your local authorized XTERRA Fitness service organization.
3. If there is a question as to where to obtain service, contact our service department at (800) 258-8511.
4. XTERRA Fitness's obligation under this warranty is limited to repairing or replacing, at XTERRA Fitness's option, the product through one of our authorized service centers. All repairs must be preauthorized by XTERRA Fitness. If the product is shipped to a service center freight charges to and from the service center will be the customer's responsibility. For replacement parts shipped while the product is under warranty, the customer will be responsible for shipping and handling charges. For in-home service, the customer will be responsible for a trip charge. There will be an additional trip charge if the customer is located over 100 miles from the nearest service center.
5. The owner is responsible for adequate packaging upon return to XTERRA Fitness. XTERRA Fitness is not responsible for damages in shipping. Make all freight damage claims with the appropriate freight carrier. DO NOT SHIP ANY UNIT TO OUR FACTORY WITHOUT A RETURN AUTHORIZATION NUMBER. All units arriving without a return authorization number will be refused.
6. For any further information, or to contact our service department by mail, send your correspondence to:

XTERRA Fitness, Inc.
P.O. Box 2037
Jonesboro, AR 72402-2037

Product features or specifications as described or illustrated are subject to change without notice. All warranties are made by XTERRA Fitness, Inc. This warranty applies only in the 48 contiguous United States. NOTE: This does not apply to Alaska or Hawaii.

3000 Nestle Road Jonesboro, AR 72401 - Phone: 870-336-4286 - Fax: 870-935-7611

©2020 All Rights Reserved.