XTERRA® FITNESS

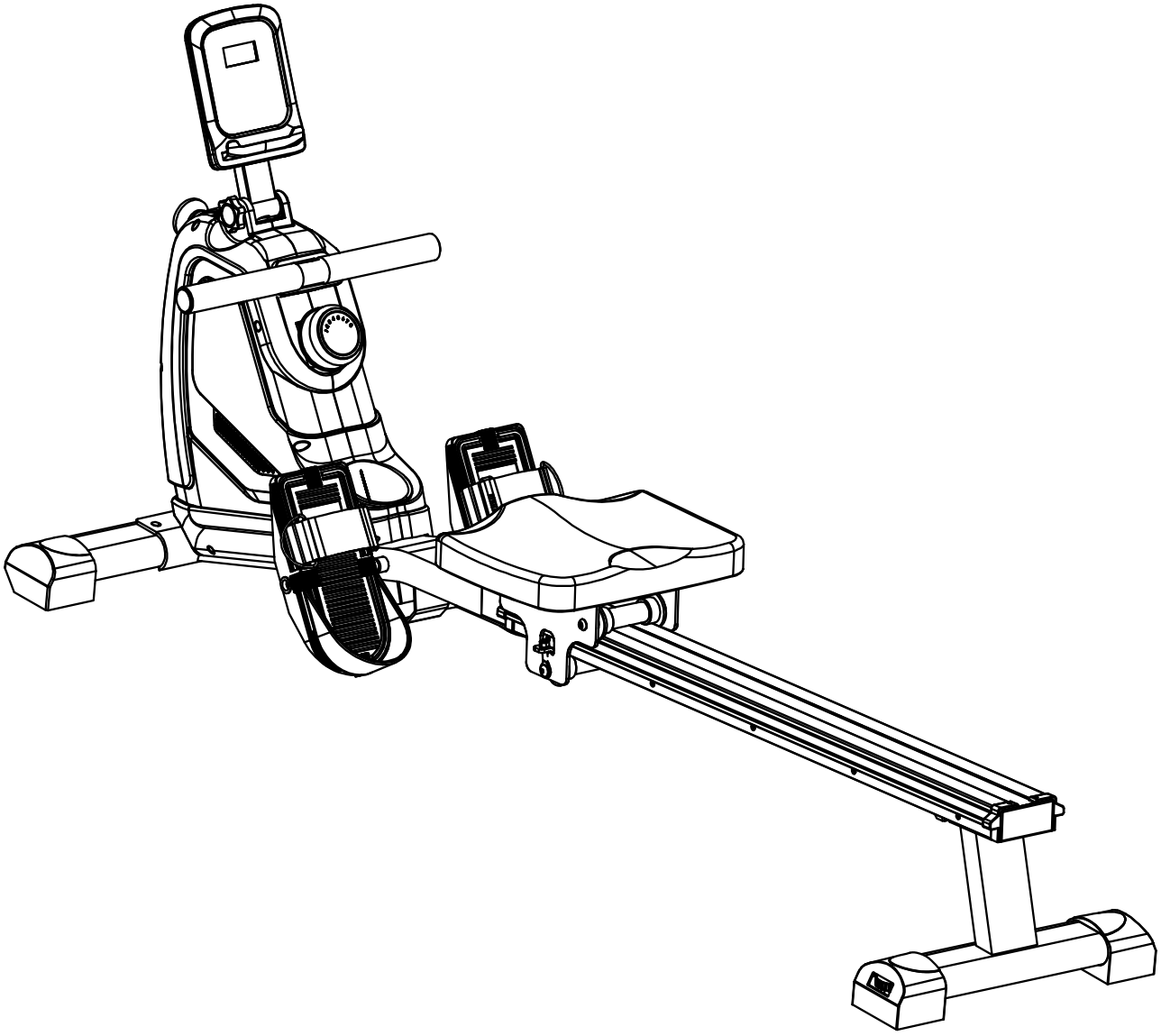

# ERG160 ROWER
# OWNER'S MANUAL

PLEASE CAREFULLY READ THIS ENTIRE MANUAL BEFORE OPERATING YOUR NEW ROWER

# Table Of Contents


| | |
|---|---|
| Product Registration | **1** |
| Important Safety Instructions | **2** |
| Exploded View | **4** |
| Parts List | **5** |
| ERG160 Assembly Instructions | **8** |
| Adjustment Guides | **16** |
| Operation of Your Console | **18** |
| Troubleshooting | **20** |
| Manufacturer’s Limited Warranty | **21** |


ERG160_VER2_20200429



ERG**160** Rower

***Congratulations On Your New Rower and Welcome to the XTERRA Fitness Family!***

Thank you for your purchase of the ERG160 Rower from **XTERRA Fitness**. Your new rower has been manufactured by one of the leading fitness manufacturers in the world. **XTERRA Fitness** will do all we can to make your ownership experience as pleasant as possible for many years to come. If you have questions, or if parts are missing or damaged, or you require customer service, call (870) 333-5500. Please have your model number and serial number handy when you call.

Please take a moment to record where you purchased your machine, as well as the date of purchase for future reference. We appreciate your confidence in **XTERRA Fitness** and we will always remember that you are the reason that we are in business. Please complete and mail your registration card today and enjoy your new rower.

Yours in Health,
**XTERRA Fitness**

# Product Registration

Purchase Location _____

Purchase Date _____

**Record Your Serial Number**
Please record the Serial Number of this fitness product in the space provided below.

Serial Number _____

**Register Your Purchase**
The self-addressed product registration card must be completed in full and returned to **XTERRA Fitness**. You can also go to ***www.xterrafitness.com/warrantyreg.html*** to register online.

# Important Safety Instructions



**WARNING:** This product can expose you to chemicals including Toluene and Acrylamide which are known to the State of California to cause cancer and birth defects or other reproductive harm.
For more information go to www.P65Warnings.ca.gov

## Fitness Equipment Safety Instructions

- Keep children and pets away from the machine at all times. DO NOT leave children unattended in the same room with the machine.
- Only one person at a time should use the machine.
- If the user experiences dizziness, nausea, chest pain, or any other abnormal symptoms, STOP the workout at once. CONSULT A PHYSICIAN IMMEDIATELY.
- This exercise equipment is not intended for use by persons with reduced physical, sensory or mental capabilities, or lack of experience and knowledge.
- Use this appliance only for its intended use as described in this manual. Do not use attachments not recommended by the manufacturer.
- Do not operate equipment on deeply padded, plush or shag carpet. Damage to both carpet and equipment may result.
- Before beginning this or any exercise program, consult a physician. This is especially important for persons over the age of 35 or persons with pre-existing health conditions.
- Keep hands away from all moving parts.
- Never drop or insert any object into any opening.
- Do not use outdoors.
- Do not attempt to use your equipment for any purpose other than for the purpose it is intended.
- Wear proper shoes. High heels, dress shoes, sandals or bare feet are not suitable for use on your equipment. Quality athletic shoes are recommended to avoid leg fatigue.
- Weight Limit: 250 lb

Failure to follow all guidelines may compromise the effectiveness of the exercise experience, expose yourself (and possibly others) to injury, and reduce the longevity of the equipment.

**SAVE THESE INSTRUCTIONS - THINK SAFETY!**

**CAUTION!! Please be careful when unpacking the carton.**

# Before you begin

Thank you for selecting our revolutionary XTERRA ERG160 Fitness Rower. A rower is an effective exercise for increasing cardiovascular fitness, building endurance, and toning the body. Our fitness rower provides an impressive selection of features designed to make your workouts at home more effective and enjoyable.

For your benefit, read this manual carefully before you use the ERG160 Fitness Rower. To help us assist you, note the product model number and serial number before contacting us. Before reading further, please familiarize yourself with the parts that are labeled in the drawing below.

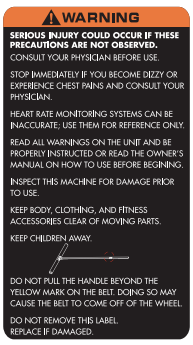

Warning Label

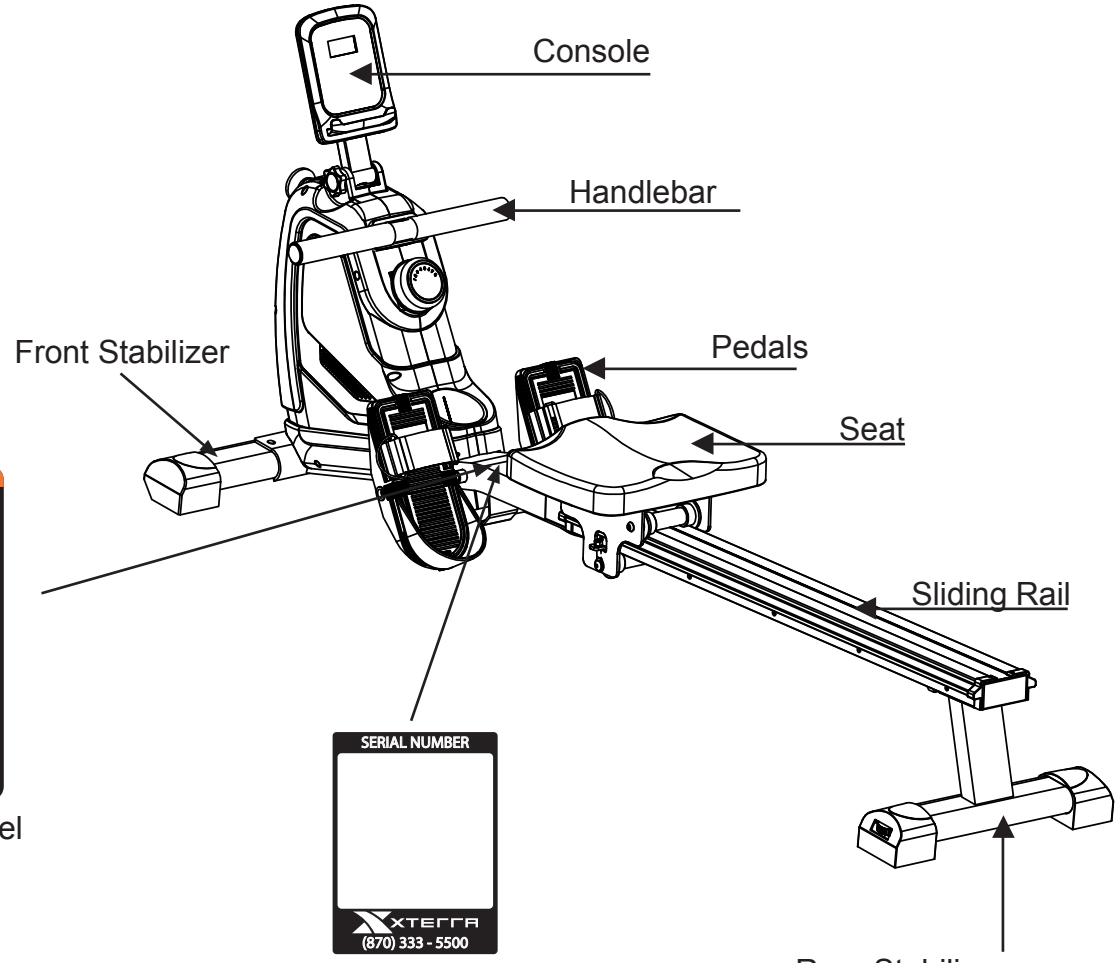

Serial Number Sticker

# ERG160 Exploded Drawing

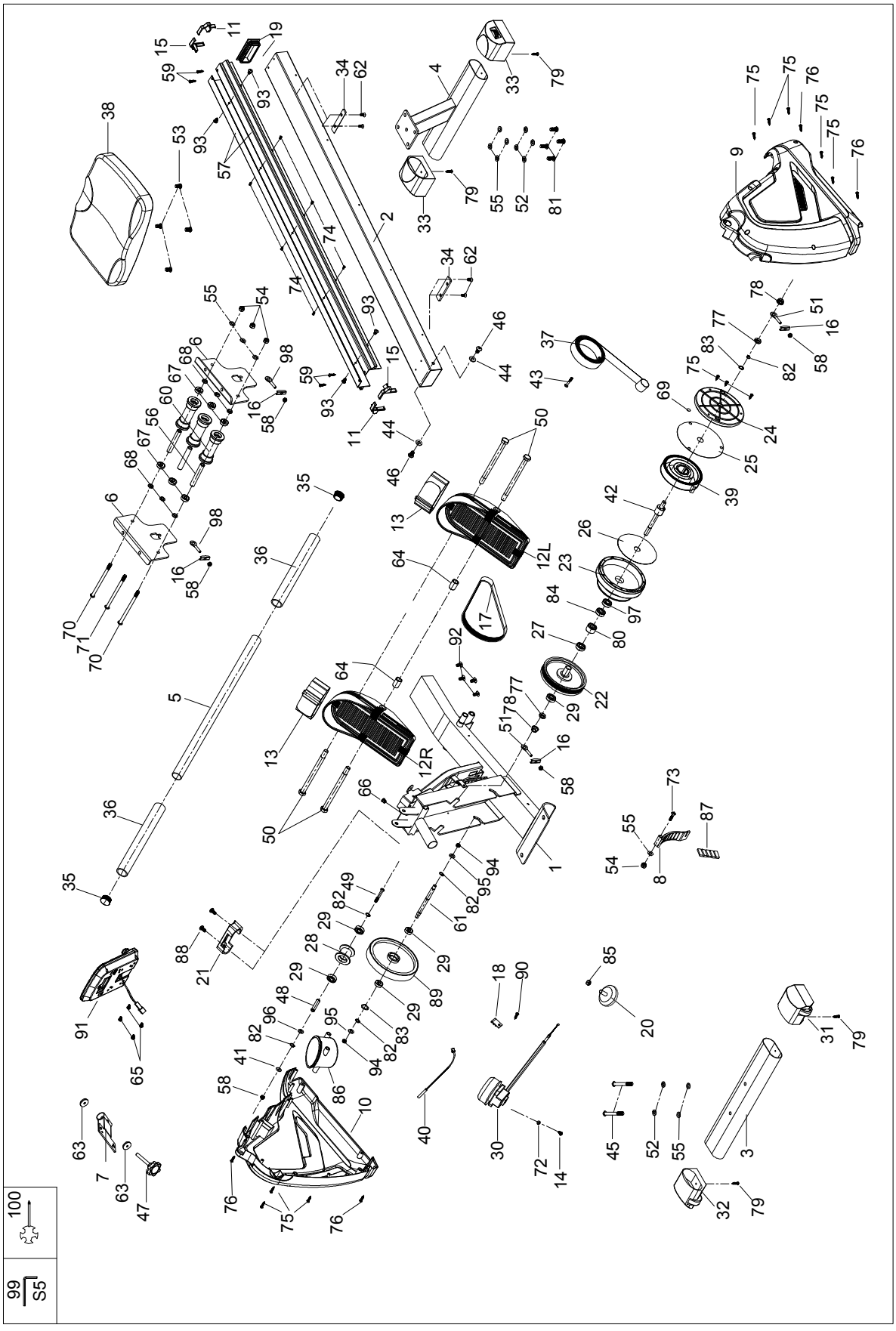

# ERG160 Parts List

| Part No. | Description | Spec. | QTY |
|---|---|---|---|
| 1 | Main frame | | 1 |
| 2 | Slide rail | | 1 |
| 3 | Front stabilizer | | 1 |
| 4 | Rear stabilizer | | 1 |
| 5 | Handlebar | | 1 |
| 6 | Fixed plate for seat | | 2 |
| 7 | Console bracket | | 1 |
| 8 | Magnet bracket | | 1 |
| 9 | Chain cover L | | 1 |
| 10 | Chain cover R | | 1 |
| 11 | Stop Brackets R | | 2 |
| 12L/R | Pedal L/R | | 1/1 |
| 13 | Pedal strap | | 2 |
| 14 | Cross-head screw | M5*15 | 1 |
| 15 | Stop Brackets L | | 2 |
| 16 | U-shaped plate | | 4 |
| 17 | Belt | 220J*14 | 1 |
| 18 | Sensor bracket | | 1 |
| 19 | Square end cap | □40*80 | 1 |
| 20 | Foot pat | | 1 |
| 21 | Handlebar seat | TPR | 1 |
| 22 | Belt pulley | | 1 |
| 23 | Drawstring pulley | | 1 |
| 24 | Volute spring cover | ABS | 1 |
| 25 | Soundproof board A | Φ142*Φ16*0.5 | 1 |
| 26 | Soundproof board B | Φ119*Φ16*0.5 | 1 |
| 27 | Bearing | 6003 | 1 |
| 28 | Belt Wheel | POM | 1 |
| 29 | Bearing | 6000ZZ | 5 |
| 30 | Tension knob | | 1 |
| 31 | Front Stabilizer end cap L | PP | 1 |
| 32 | Front Stabilizer end cap R | PP | 1 |
| 33 | Rear Stabilizer end cap | PP | 2 |
| 34 | Limiter pad | 72*20*T5.0 | 2 |
| 35 | Round end cap | | 2 |
| 36 | Foam grip | | 2 |
| 37 | Meshbelt | | 1 |
| 38 | Seat | | 1 |

# ERG160 Parts List

| | | | |
|---|---|---|---|
| 39 | Volute spring | | 1 |
| 40 | Sensor wire | L400 mm | 1 |
| 41 | Flat washer | OD12×ID6.5×1.5 | 1 |
| 42 | Shaft for Drawstring pulley | | 1 |
| 43 | Cross-head screw | M5×35 | 1 |
| 44 | Flat washer | OD20*ID8.5*T1.5 | 2 |
| 45 | Allen bolt | M8*45 | 2 |
| 46 | Allen bolt | M8*15 | 2 |
| 47 | Adjust knob | | 1 |
| 48 | Spacer for Belt Wheel | Φ10*Φ6.1*40 | 1 |
| 49 | Hex head bolt | M6*55 | 1 |
| 50 | Hex head bolt | M12*Φ12.5*160 | 4 |
| 51 | Adjusting screw | M6*40 | 2 |
| 52 | Spring washer | OD12*ID8.5*T2.0 | 6 |
| 53 | Allen bolt | M6*15 | 4 |
| 54 | Nylon nut | M8 | 4 |
| 55 | Flat washer | OD16*ID8.5*T1.5 | 10 |
| 56 | Bushing for seat roller | Φ12.7*1.4*78 | 3 |
| 57 | Aluminum Plate | | 2 |
| 58 | Nylon nut | M6 | 5 |
| 59 | Self-tapping screw | ST4.2*L16 (Φ10) | 4 |
| 60 | Seat roller | Φ40*Φ33*94 | 3 |
| 61 | Flywheel Axle | Φ10*126 | 1 |
| 62 | Flat head Screw | M6*10 | 4 |
| 63 | Plastic bushing | Φ25.4*Φ8.2*10 | 2 |
| 64 | Pedal bushing | Φ16*Φ13*26 | 2 |
| 65 | Cross-head screw | M5*10 | 4 |
| 66 | Wire plug | | 1 |
| 67 | Bearing | 608ZZ | 6 |
| 68 | Spacer for Seat Roller | OD12.7*ID8.2*13 | 6 |
| 69 | Sensor magnet | Φ10*2 | 1 |
| 70 | Allen bolt | M8*140 | 2 |
| 71 | Allen bolt | M8*145 | 1 |
| 72 | Flat washer | OD11×ID5.5×1.5 | 1 |
| 73 | Allen bolt | M8*50 | 1 |
| 74 | Cross-head screw | ST4.2*16 (Φ8) | 6 |
| 75 | Self-tapping screw | ST4.2*19 | 11 |
| 76 | Adjusting screw | M6*30 | 4 |
| 77 | Hex head nut | M10*P1.0*H5 | 2 |

# ERG160 Parts List

| | | | |
|---|---|---|---|
| 78 | Flange nut | M10*P1.0 | 2 |
| 79 | Self-tapping screw | ST4.2*L25 | 4 |
| 80 | One way bearing | HF1712 | 1 |
| 81 | Allen bolt | M8*20 | 4 |
| 82 | C clip | Φ10 | 5 |
| 83 | Wave washer | OD13.5*ID10.2*0.4 | 2 |
| 84 | Bearing | 16003 | 1 |
| 85 | nut | M10 | 1 |
| 86 | Bottle Holder | | 1 |
| 87 | Magnet | 25*10*5 | 5 |
| 88 | Cross-head screw | M5*12 | 2 |
| 89 | Flywheel | Φ150 | 1 |
| 90 | Self-tapping screw | ST4.2*12 | 1 |
| 91 | Console | X-3508 | 1 |
| 92 | Flat head Screw | M8*15 | 4 |
| 93 | Cross-head screw | M6*15 | 4 |
| 94 | Nylon nut | M8*H5 | 2 |
| 95 | Flat washer | OD16*ID8.5*T1.0 | 2 |
| 96 | Flat washer | OD14*ID10.1*0.5 | 1 |
| 97 | Bearing | 6300 | 1 |
| 98 | Adjusting Screw | M6*30 | 2 |
| 99 | Allen key L5 | | 1 |
| 100 | Multi-function wrench | | 1 |

# ERG160 Assembly Pack Checklist

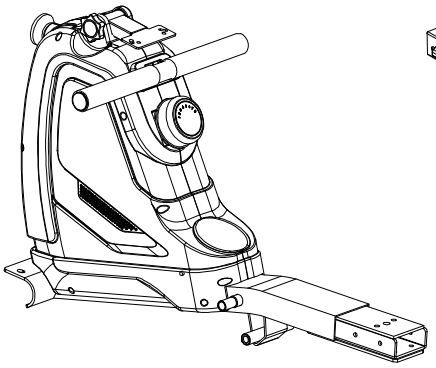

NO.1

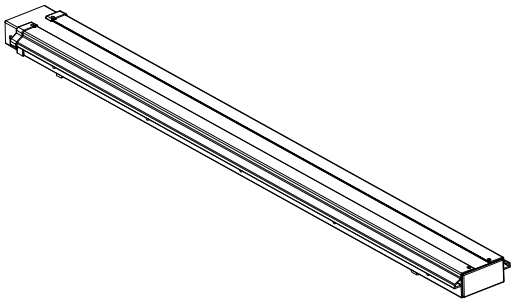

NO.2

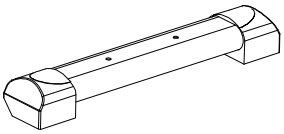

NO.3

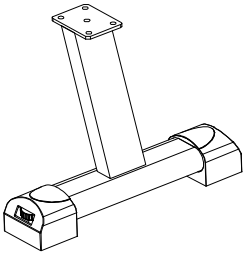

NO.4

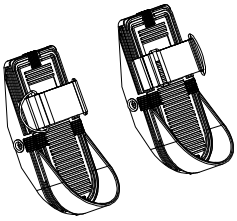

NO.12 R/L

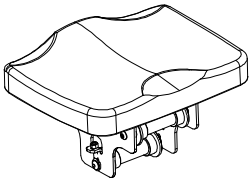

NO.38



NO.91

| Part No. | Description | Quantity |
|---|---|---|
| 1 | Main Frame | 1 |
| 2 | Slide Rail | 1 |
| 3 | Front Stabilizer | 1 |
| 4 | Rear Stabilizer | 1 |
| 12R/L | Pedals | 2 |
| 38 | Seat Assembly | 1 |
| 91 | Console | 1 |
| | Hardware | 1 |
| | Manual | 1 |

Note: Above parts are all needed to assemble this machine. Before you start to assemble, please check the hardware packing to make sure they are included.

# ERG160 Assembly Pack Checklist

## STEP-1

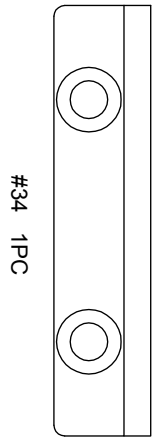

#34 1PC

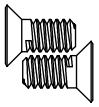

#62 2PCS

## STEP-2

#55 OD16*ID8.5*1.5 4PCS

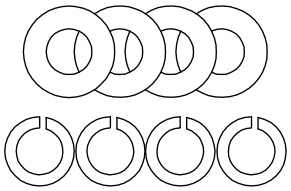

#52 ID8.5 4PCS
#81 M8*20 4PCS

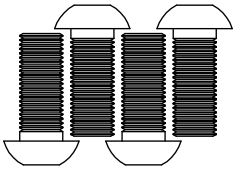

## STEP-3

#55 OD16*ID8.5*1.5 2PCS

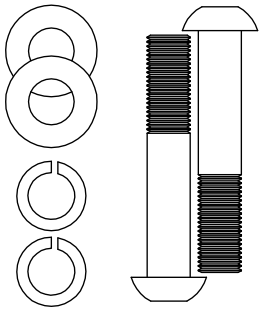

#52 ID8.5 2PCS
# 45 M8*45 2PCS

## STEP-4

#44 OD16×ID8.5×1.5 2PCS

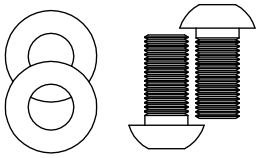

# 46 M8*15 2PCS
#92 M8*15 4PCS

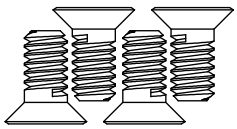

#59 2PCS



#15 1PC



#11 1PC

## TOOL

# 99 S5 1PCS
# 100 S13-14-19 1PC

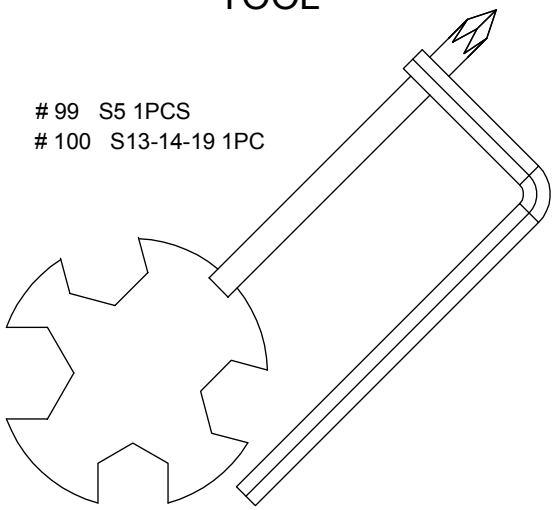

## STEP-5

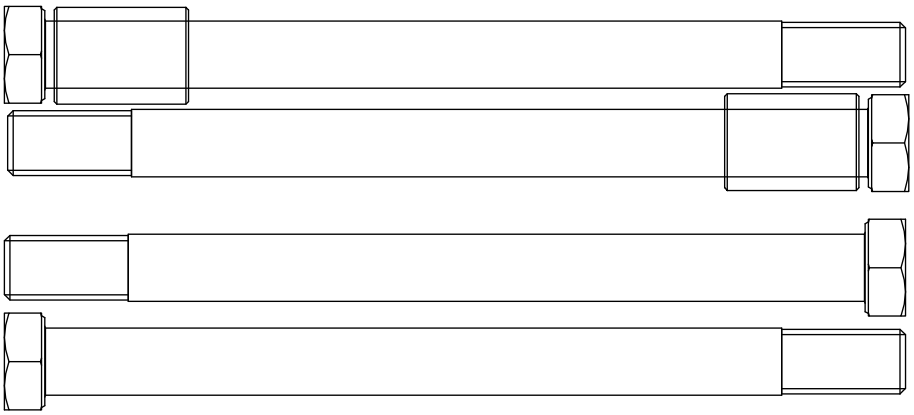

#50 M12*160 4pcs #64 Φ18*Φ13*26 2PCS

# ERG160 Assembly Instructions

## 1 Seat Assembly

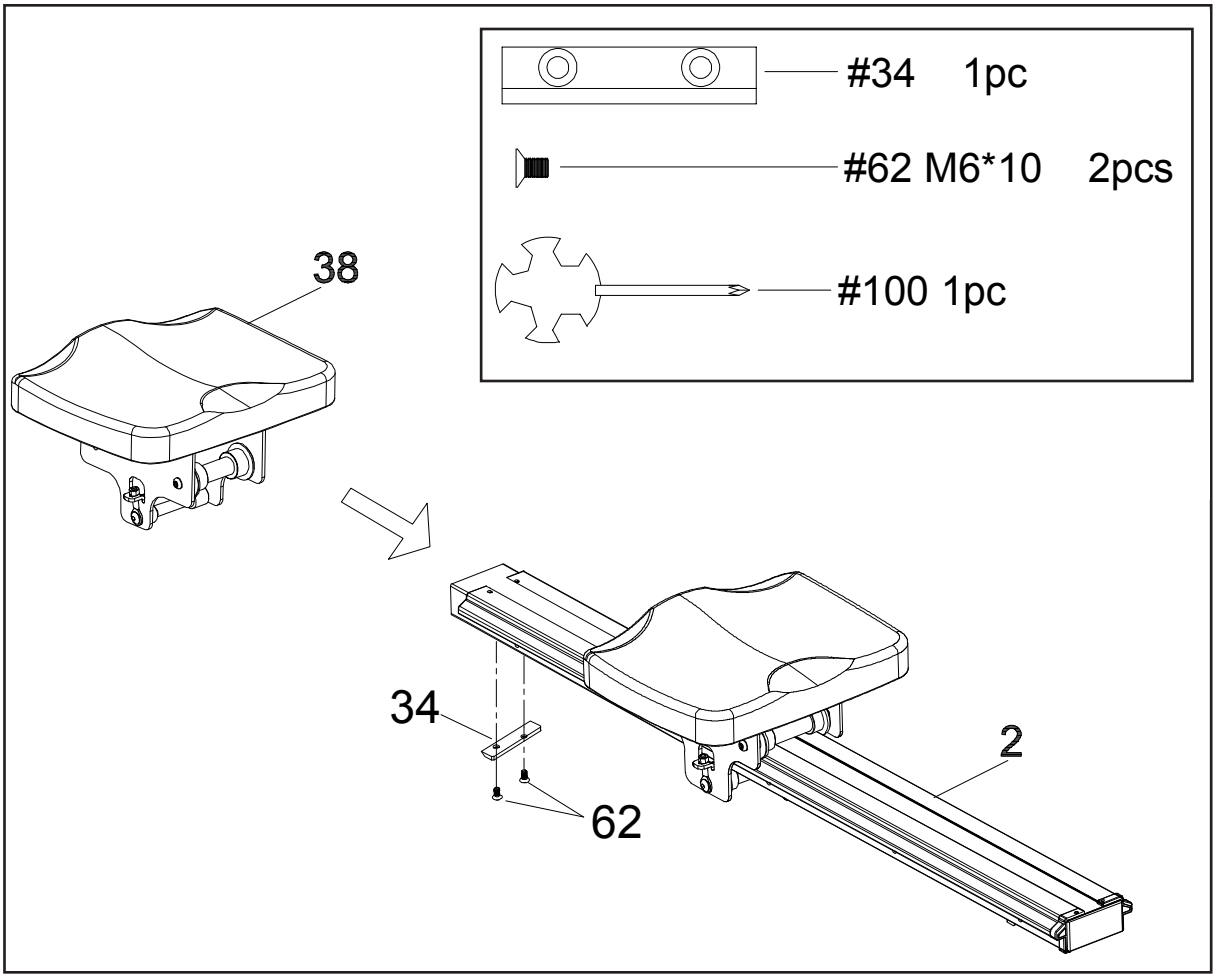


1. Slide the **Seat Assembly (38)** onto the **Slide Rail (2)**. Attach the **Limiter Pad (34)** to the **Slide Rail (2)** and secure with 2 **Flat Head Screws (62)**.

# ERG160 Assembly Instructions

## 2 Rear Stabilizer

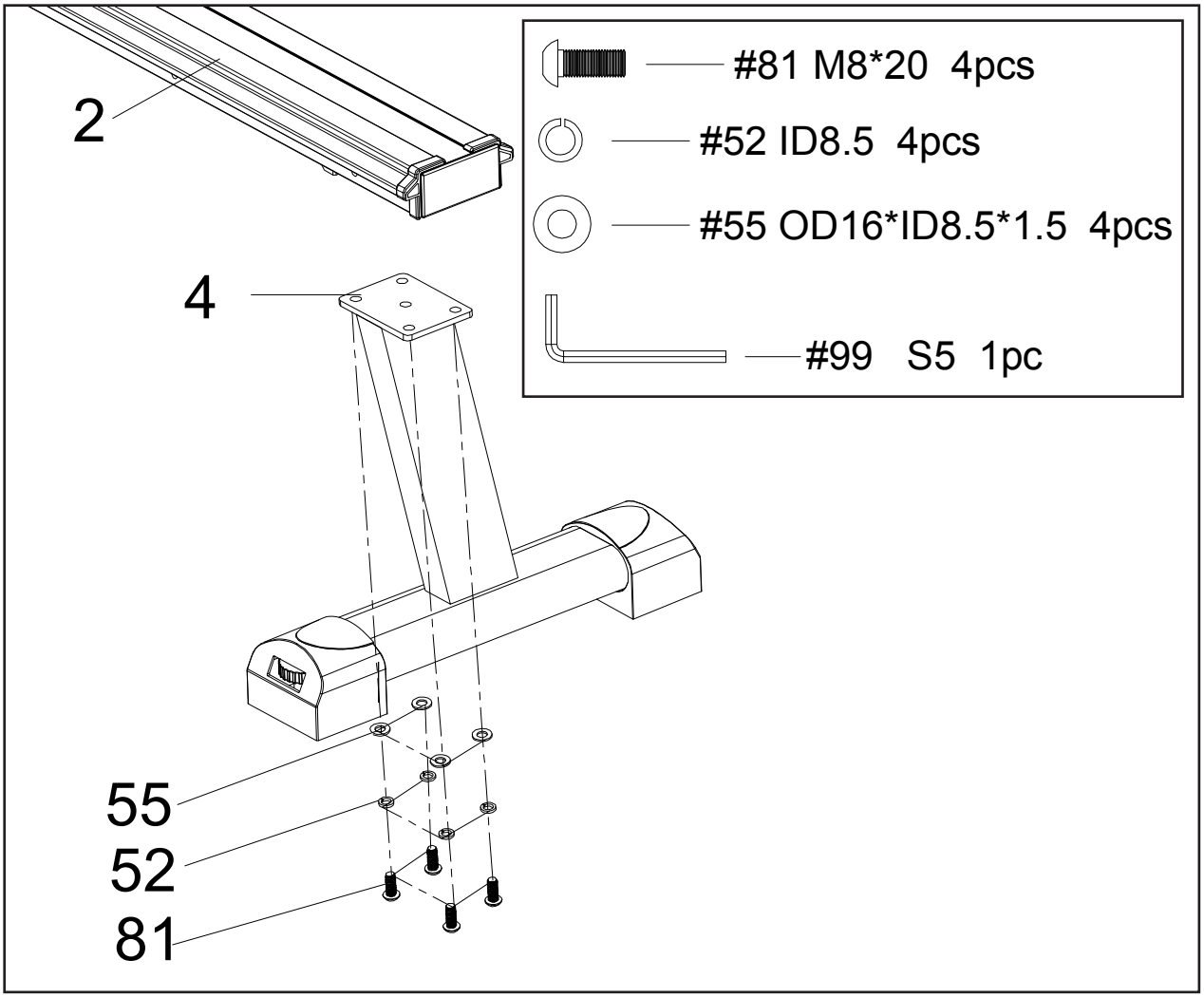


1. Attach the **Rear Stabilizer (4)** to the **Slide Rail (2)**, tighten with 4 **Flat Washers (55)** and 4 **Spring Washers (52)** and 4 **Allen Bolts (81)**.

# ERG160 Assembly Instructions

## 3 Front Stabilizer

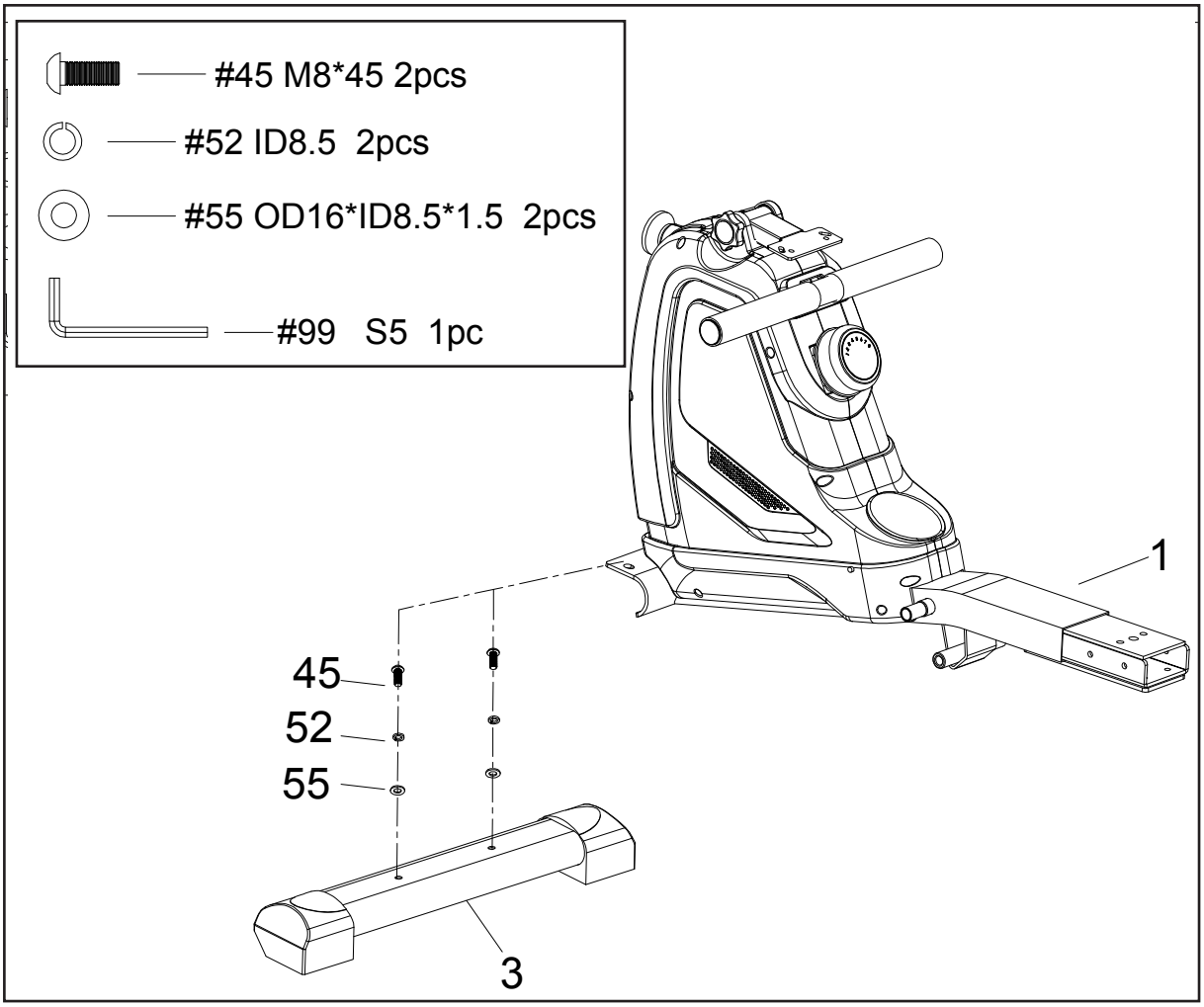


1. Attach the **Front Stabilizer (3)** to the **Main Frame (1)**, secure with 2 **Flat Washers (55)** and 2 **Spring Washers (52)** and 2 **Allen Bolts (45)**.

# ERG160 Assembly Instructions

## 4 Slide Rail

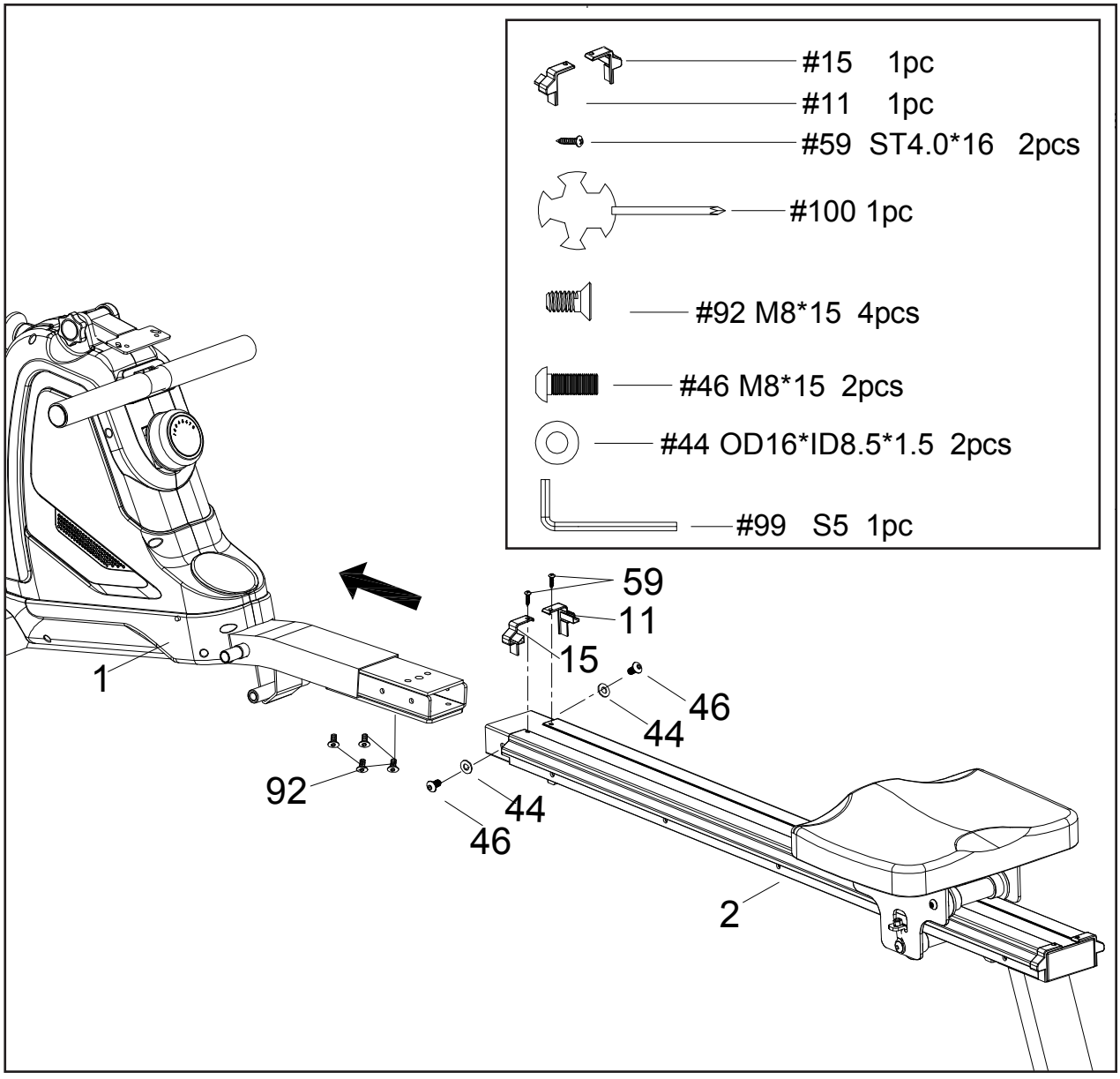


1. Insert the **Slide Rail (2)** into the **Main Frame (1)**, 4 **Allen Bolts (92)**.

2. Attach the **Stop Brackets (11 & 15)** to the **Sliding Rail (2)** and secure them with 2 **Self-tapping Screws (59)**.

3. Attach the **Flat Washers (44)** and 2 **Allen Bolts (46)** on the **Slide Rail (2)** and secure.

# ERG160 Assembly Instructions

## 5 Pedals

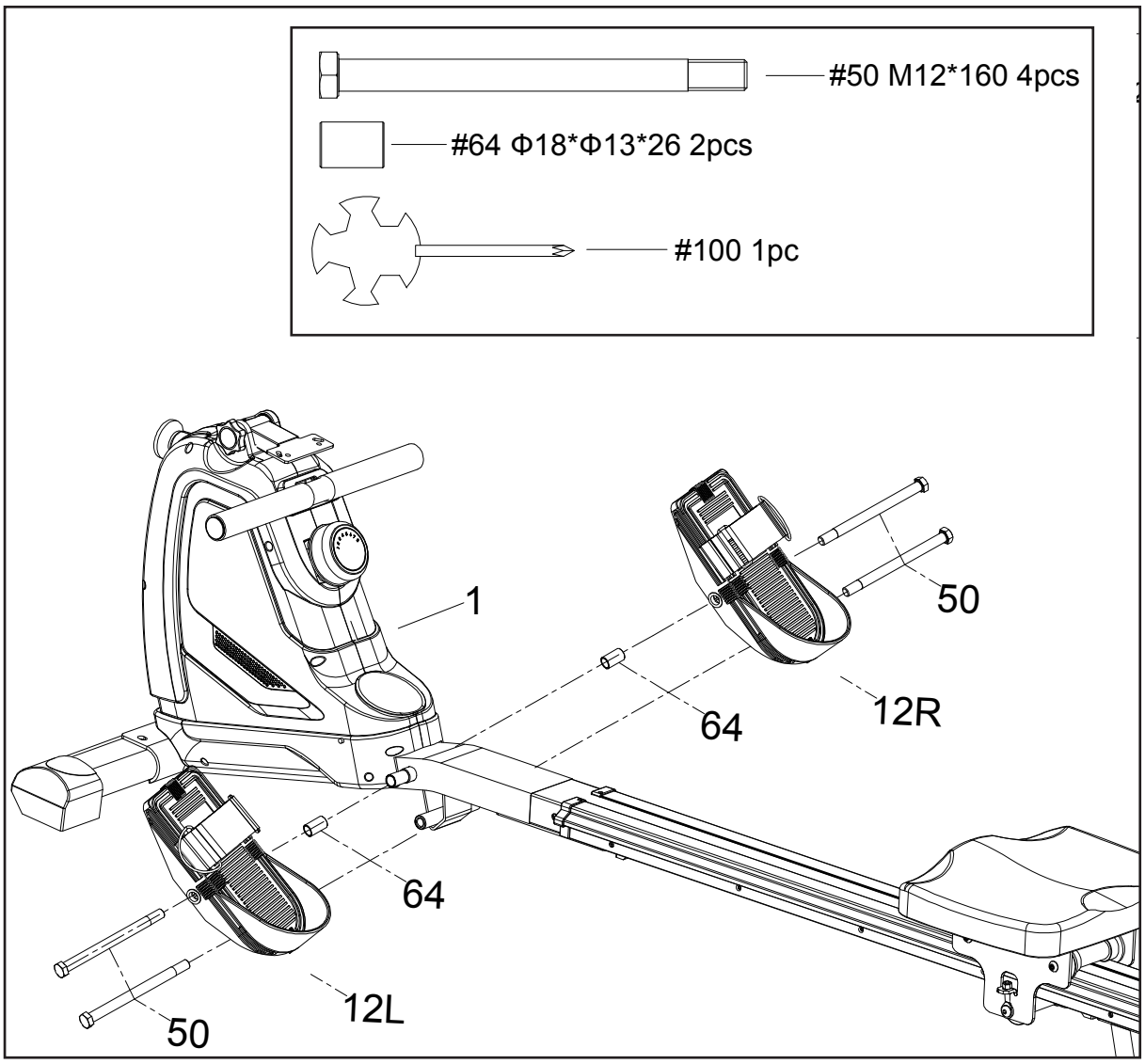


1. Attach the **Left Pedal (12L)** onto the **Main Frame (1)** and secure with 2 **Hex Head Bolts (50)** and 1 **Pedal Bushing (64)**.

2. Repeat the same procedures to assemble the **Right Pedal (12R)** to the **Main Frame (1)**.

# ERG160 Assembly Instructions

## 6 Connecting the Console

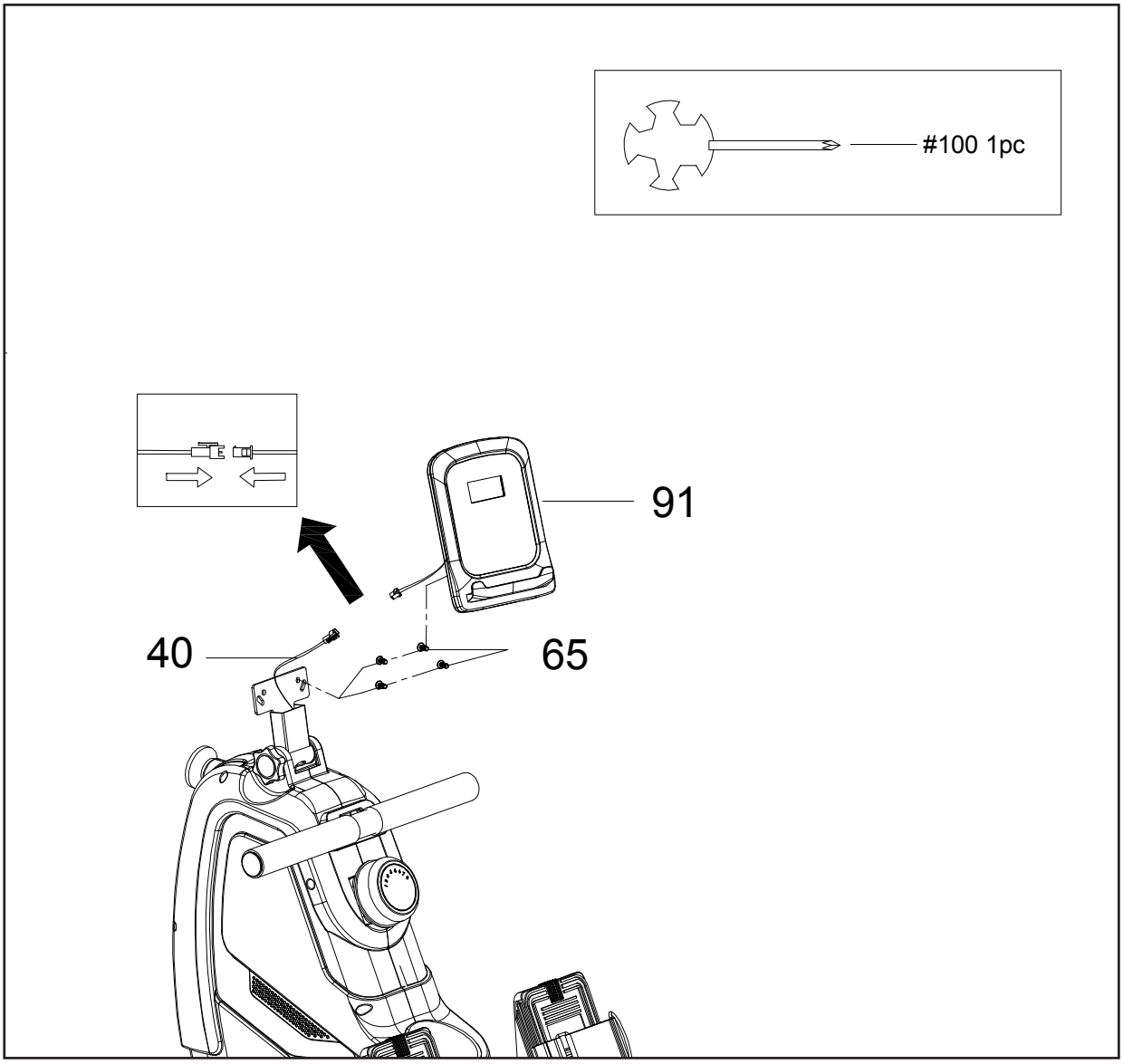


1. Connect the **Sensor Wires (40)** with the **Console (91)** and secure with 4 **Cross-head Screws (65)** that are pre-assembled on the back of **Console (91)**.

# Adjustment Guides

## Pedal Adjustment

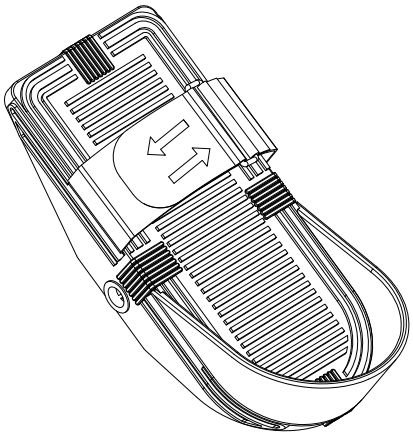

To adjust the pedal strap, remove the Velcro end of the strap from the mesh side by pulling it upward then to the left.

Once removed, you may increase the opening of the pedal strap by pulling the mesh end up and to the right.

To tighten, pull the Velcro end of the pedal strap upward then to the right and down to secure it to the mesh side of the strap.

## Moving the Machine

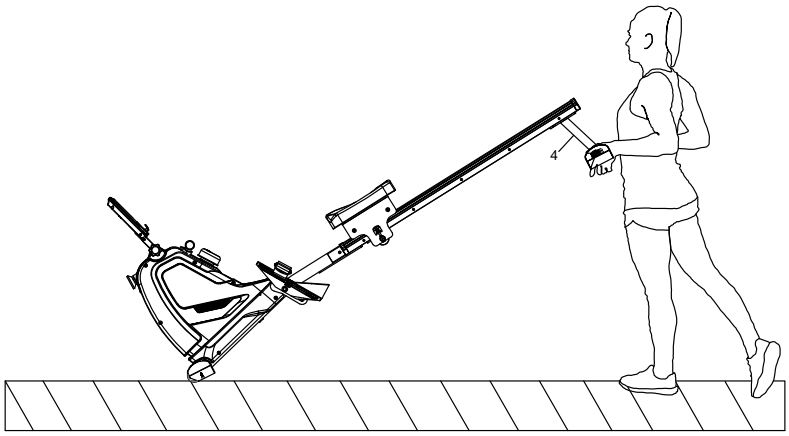


To move the machine, lift up the rear stabilizer until the transportation wheels on the front stand touch the ground.

With the wheels on the ground, you can transport the rower to the desired location with ease.

## Adjusting the Balance

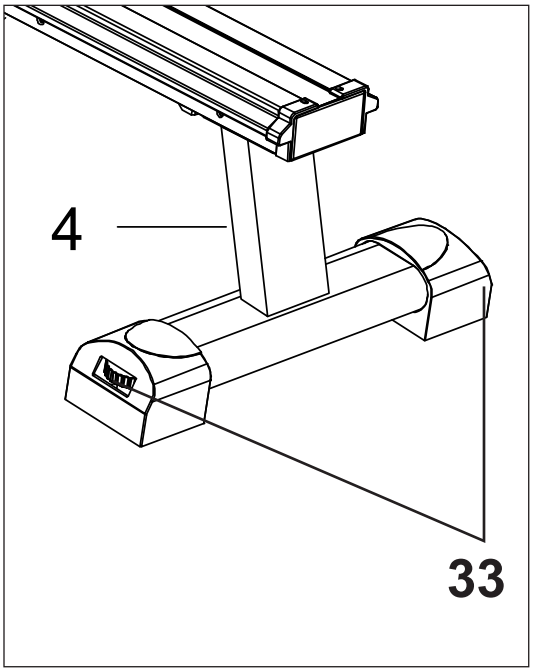


Levelers are found on the **Rear Stabilizer (4)** of the machine. If you find the machine is unbalanced before or during your workout, the **Levelers (33)** can be used to correct this issue. Continuously working out on an unbalanced machine may cause damage to the machine.

# Storing the Rower

When not in use, the rower can be stored vertically to save space. Take the **Slide Rail (2)** and move it into a vertical position.

CAUTION: The **Seat (38)** will glide down when the **Slide Rail (2)** is raised.

Also take care to avoid the **Rear Stabilizer (4)** when moving the **Slide Rail (2)**.

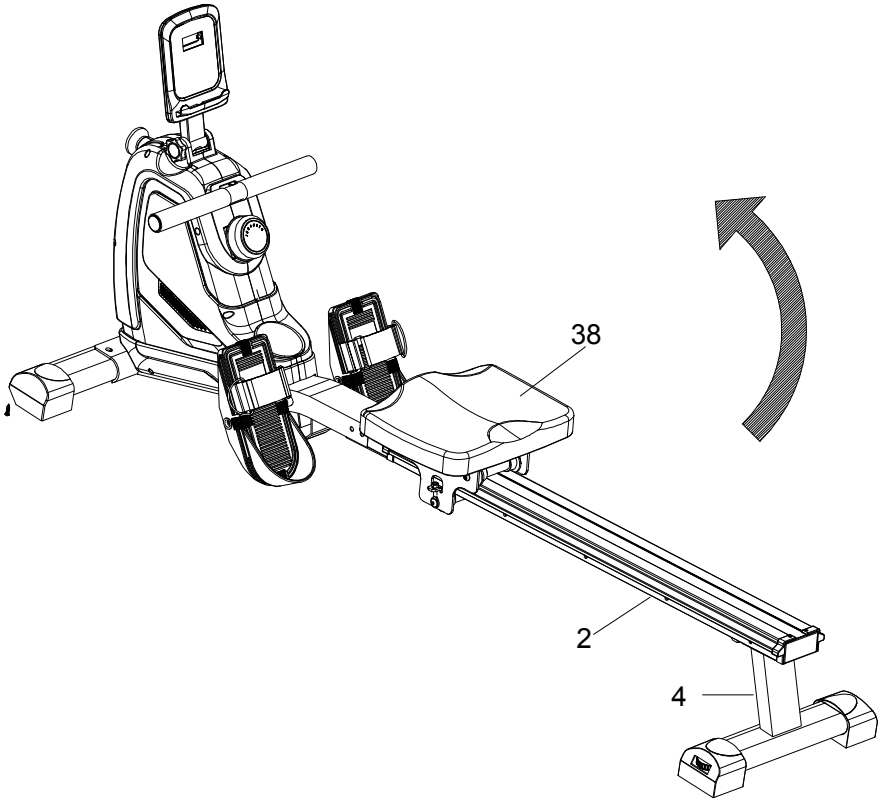


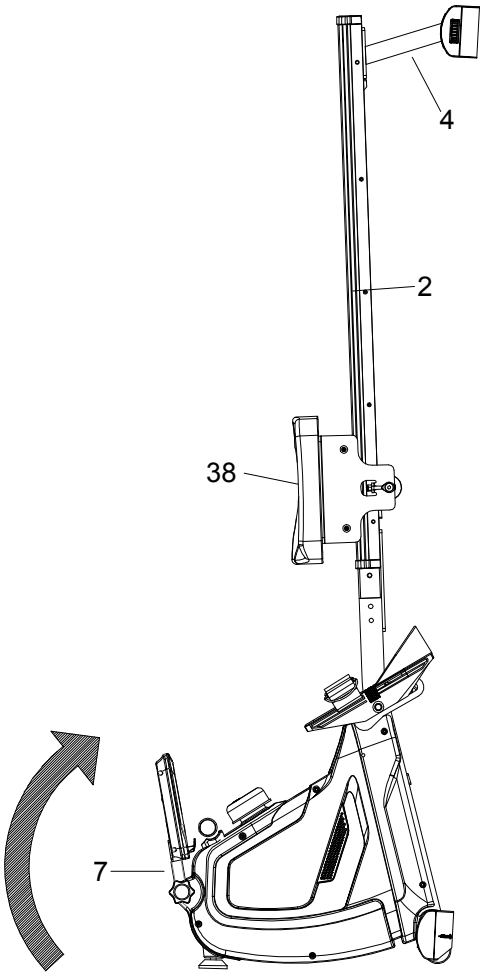

# Operation of Your Console

## ERG160 Console




## Functions and Operations

| | | |
|---|---|---|
| Functions | SCAN | Every 6 seconds |
| | TIME | 0:00 ~ 99:59 |
| | COUNT | 0 ~ 9999 TIMES |
| | TRIP DISTANCE | 0 ~ 9999 METER |
| | CALORIES | 0 ~ 9999 CAL |
| | SPM | 0 ~ 999 TIMES/MIN |
| BATTERY TYPE | | 2 AA or UM 3 |
| OPERATING TEMPERATURE | | 0°C ~ +40°C, 32˚F ~ 104˚F |
| STORAGE TEMPERATURE | | -10°C ~ +60°C, 14˚F ~ 140˚F |

# Key Functions

**MODE**: Press the MODE button to select functions. Press the button and hold for two seconds to reset all functions to zero.

**SCAN:** The console displays: time, stroke count, distance, calories, and strokes per minute, in sequence for 6 seconds at a time

**TIME:** Displays the time from exercise start to the end

**COUNT:** Displays the total stroke count

**DISTANCE:** Displays the distance from exercise start to the end

**CALORIES:** Displays the calories burned from the exercise start to the end.

The calorie readout is an estimate for an average user. It should be used only as comparison between workouts on this unit.

**STROKE/MIN (SPM):** Displays an automatic accumulation of strokes per minute.

**NOTE:**

1. The battery symbol will light up when the battery is low. Please replace the batteries at this time.

2. The console will shut off after 2 minutes of disuse.

3. The console will automatically start when input is recieved from pedaling or pressing the MODE button.

4. The console will pause calculations after 4 seconds of no input. This will read as “STOP” on the console screen. Calculations will resume once exercise input is returned.

# Troubleshooting

| Problem | Cause | Solution |
|---|---|---|
| Console does not turn on | Battery not installed | Install battery |
| | Computer wires not connected | Ensure the computer wires are connected properly at the upright and computer |

# Manufacturer's Limited Warranty

Effective January 06, 2020 - ROWER LIMITED WARRANTY

XTERRA Fitness Inc. warrants all its home use Rower parts for a period of time listed below, from the date of retail sale, as determined by a sales receipt or in the absence of a sales receipt, eighteen (18) months from the original factory shipping date. XTERRA Fitness' responsibilities include providing new or remanufactured parts, at XTERRA Fitness' option, and technical support to our independent dealers and servicing organizations. In the absence of a dealer or service organization, these warranties will be administered by XTERRA Fitness directly to a consumer. The warranty period applies to the following components:

| **Home Use Limited Warranty** | | |
|---|---|---|
| Frame | Parts | Labor |
| 1 Year | 90 Days | None |

**NORMAL RESPONSIBILITIES OF THE CONSUMER**

This warranty applies only to products in ordinary household use. The consumer is responsible for the items listed below:

1. The warranty registration card must be completed and returned to the address listed on the card within 10 days of the original purchase to validate the manufacturer's limited warranty or register online at the XTERRA Fitness website.
2. Proper use of the Rower in accordance with the instructions provided in this manual, including maintenance.
3. Proper connection to a power supply of sufficient voltage, replacement of blown fuses, repair of loose connections or defects in house/facility wiring.
4. Expenses for making the Rower accessible for servicing, including any item that was not part of the Rower at the time it was shipped from the factory.
5. Damages to the Rower finish during shipping, installation or following installation.

**EXCLUSIONS**

This warranty does not cover the following:

1. CONSEQUENTIAL, COLLATERAL, OR INCIDENTAL DAMAGES SUCH AS PROPERTY DAMAGE AND INCIDENTAL EXPENSES RESULTING FROM ANY BREACH OF THIS WRITTEN OR ANY IMPLIED WARRANTY. Note: Some states do not allow the exclusion or limitation of incidental or consequential damages, so this limitation or exclusion may not apply to you.
2. Service call reimbursement to the consumer. Service call reimbursement to the dealer that does not involve malfunction or defects in workmanship or material, for units that are beyond the warranty period, for units that are beyond the service call reimbursement period, for Rowers not requiring component replacement, or Rowers not in ordinary household use.
3. Damages caused by services performed by persons other than authorized XTERRA Fitness service companies, use of parts other than original XTERRA Fitness parts, or external causes such as alterations, modifications, abuse, misuse, accident, improper maintenance, inadequate power supply, or acts of God.
4. Products with original serial numbers that have been removed or altered.
5. Products that have been; sold, transferred, bartered, or given to a third party.
6. Products that are used as store display models.
7. Products that do not have a warranty registration on file at XTERRA Fitness Inc. XTERRA Fitness reserves the right to request proof of purchase if no warranty record exists for the product.
8. Product use in any environment other than a residential setting.
9. THIS WARRANTY IS EXPRESSLY IN LIEU OF ALL OTHER WARRANTIES EXPRESSED OR IMPLIED, INCLUDING THE WARRANTIES OF MERCHANTABILITY AND/OR FITNESS FOR A PARTICULAR PURPOSE.

**SERVICE**

Keep your bill of sale. Twelve (12) months from the date on the bill of sale or eighteen (18) months from the date of factory shipping as determined by the serial number establishes the warranty period should service be required. If service is performed, it is in your best interest to obtain and keep all receipts. This written warranty gives you specific legal rights. You may also have other rights that vary from state to state. Service under this warranty must be obtained by following these steps, in order:

1. Contact your selling authorized XTERRA Fitness dealer. OR
2. Contact your local authorized XTERRA Fitness service organization.
3. If there is a question as to where to obtain service, contact our service department at (870)333-5500
4. XTERRA Fitness' obligation under this warranty is limited to repairing or replacing, at XTERRA Fitness' option, the product through one of our authorized service centers. All repairs must be preauthorized by XTERRA Fitness. If the product is shipped to a service center freight charges to and from the service center will be the customer's responsibility. For replacement parts shipped while the product is under warranty, the customer will be responsible for shipping and handling charges. For in-home service, the customer will be responsible for a trip charge. There will be an additional trip charge if the customer is located over 100 miles from the nearest service center.
5. The owner is responsible for adequate packaging upon return to XTERRA Fitness. XTERRA Fitness is not responsible for damages in shipping. Make all freight damage claims with the appropriate freight carrier. DO NOT SHIP ANY UNIT TO OUR FACTORY WITHOUT A RETURN AUTHORIZATION NUMBER. All units arriving without a return authorization number will be refused.
6. For any further information, or to contact our service department by mail, send your correspondence to:

**XTERRA Fitness, Inc.**
**P.O. Box 2037**
**Jonesboro, AR 72402-2037**

Product features or specifications as described or illustrated are subject to change without notice. All warranties are made by XTERRA Fitness, Inc. This warranty applies only in the 48 contiguous United States. NOTE: This does not include Alaska or Hawaii.

3000 Nestle Road Jonesboro, AR 72401 - Phone:870-333-5500 - Fax:870-935-7611



©2020 All RIghts Reserved. 