XTERRA FITNESS

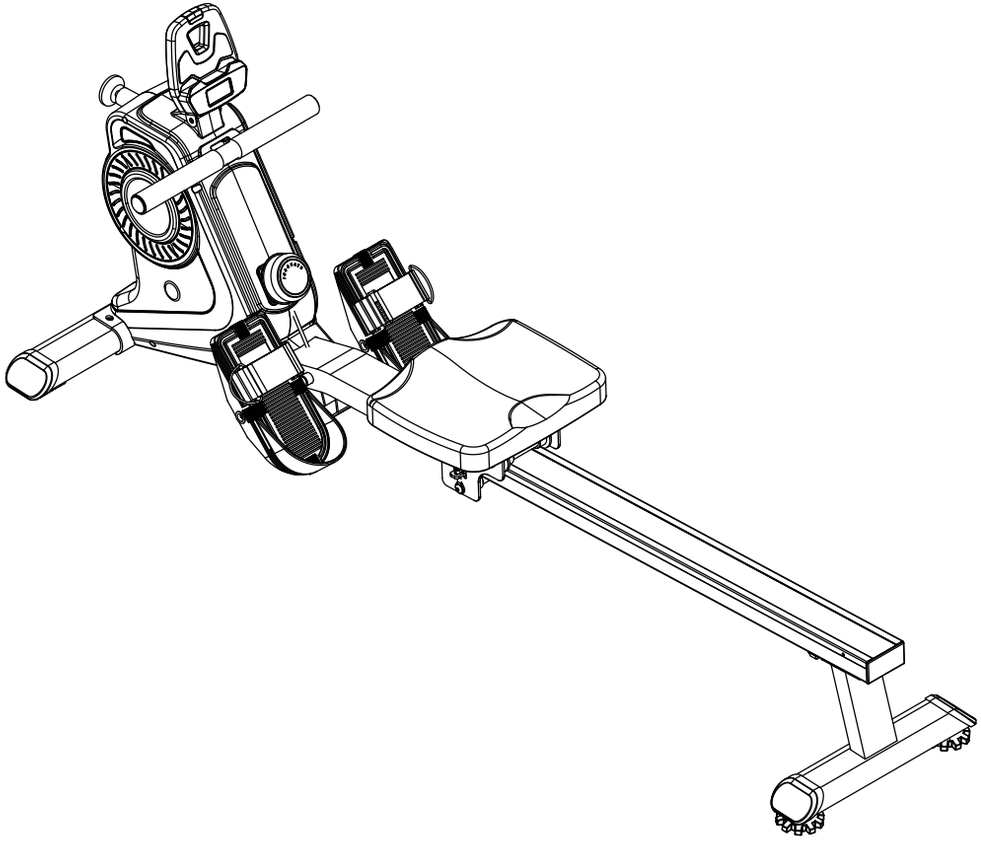

ERG180 MAGNETIC ROWER

ERG180_118092_OM_20251120

Online Support

If you require assistance or are experiencing issues with your XTERRA Machine, please contact customer care for additional help.

1-800-258-8511

questions@xterrafitness.com

Warranty Registration

Scan to quickly and easily register your new XTERRA Fitness machine.

Table of Contents

Product Registration 3

Warning / Safety Instructions

Product Label 4

Warning, Compliances, and Notices 5

Safety Instructions 6

Parts and Assembly

Parts of your Rower 7

Parts Included 8

Assembly 10

Adjusting Your Machine 16

Technology and Features

About Your Machine 19

Using the XF Connect App 20

Console Screen - Overview 22

Specifications 23

Function Buttons 24

Programs

Target Buttons 25

Heart Rate Chest Strap 26

Heart Rate Chest Strap Warnings 27

Heart Rate Exertion 28

Maintenance & Care 30

Exploded View Diagram 31

Warranty 32

PRODUCT REGISTRATION

Congratulations on your new Rower, and welcome to the XTERRA Fitness family!

Thank you for your purchase of this quality unit from XTERRA Fitness. Your new unit was manufactured by one of the leading fitness manufacturers in the world and is backed by one of the most comprehensive warranties available. XTERRA Fitness will do all we can to make your ownership experience as pleasant as possible for many years to come.

If you have questions, or if parts are missing or damaged, or you require customer service, call (870) 333-5500. Please have your model number and serial number handy when you call.

Please take a moment at this time to record the name of the dealer, their telephone number, and the date of purchase below to make any future, needed contact easy. We appreciate your support and we will always remember that you are the reason that we are in business.

Serial Number	
Date of Purchase	
Dealer / Place of Purchase	

WARRANTY REGISTRATION

Use your smartphone to scan the QR code above to quickly and easily register your new XTERRA Fitness machine.

You can also go to **xterrafitness.com/warranty** under the Support tab to register online.

Version: 2.0
Revision: 11/20/25

PRODUCT LABELS

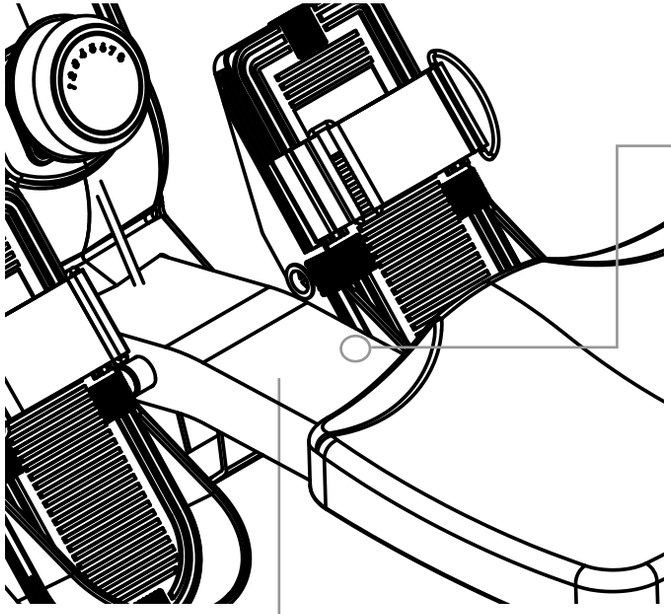



SERIAL NUMBER STICKER

This sticker will be found on the center frame, near the pedals. Please record the number below the barcode for the purpose of registering your rower's warranty.



PROPOSITION 65 WARNING

This sticker will be found on the center frame, near the pedals. The State of California requires us to inform you that this unit was manufactured using chemicals that could cause harm with improper use.

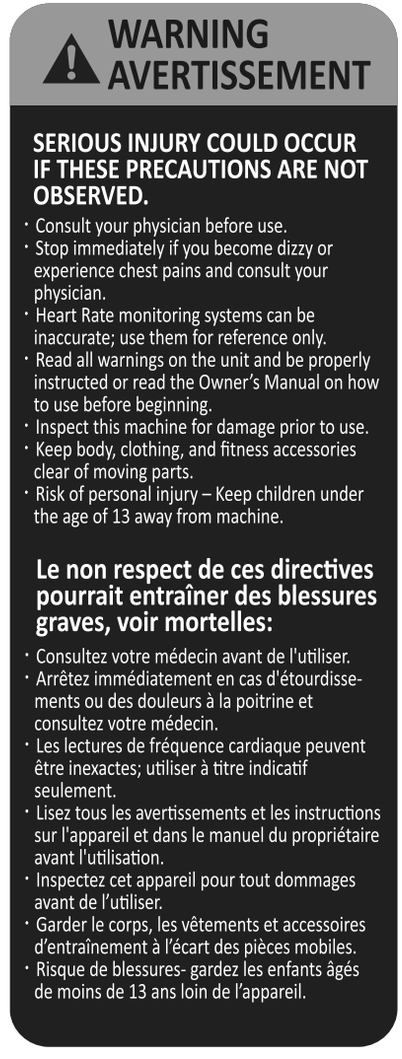

SAFETY WARNING STICKER

This sticker will be found on the center frame, near the pedals. The same warning can be found in this manual. Please read and be aware of the precautions before operating your unit.

WARNINGS, COMPLIANCE AND NOTICES

This product has been certified to meet the following standards:

- FCC part 15
- Bluetooth (with FTMS)

This device complies with part 15 of the FCC Rules. Operation is subject to the following two conditions: (1) this device must not cause harmful interference, and (2) this device must not accept any interference received, including interference that may cause undesired operation.

NOTE: This equipment has been tested and found to comply with the limits for a Class B digital device, pursuant to Part 15 of the FCC Rules. These limits are designed to provide reasonable protection against harmful interference in a residential installation. This equipment generates, uses and can radiate radio frequency energy and, if not installed and used in accordance with the instructions, may cause harmful interference to radio communications. However, there is no guarantee that interference will not occur in a particular installation. If this equipment does cause harmful interference to radio or television reception, which can be determined by turning the equipment off and on, the user is encouraged to try to correct the interference by one or more of the following measures:

1. Reorient or relocate the receiving antenna.
2. Increase the separation between the equipment and receiver.
3. Connect the equipment to an outlet on a circuit different from that to which the receiver is connected.
4. Consult the dealer or an experienced radio/TV technician for help.

CAUTION:

- To comply with FCC RF exposure compliance requirements, a separation distance of at least 20 cm must be maintained between the antenna of this device and all persons.
- This transmitter must not be co-located or operating in conjunction with any other antenna or transmitter

SAFETY INSTRUCTIONS

When using an appliance, basic precautions should always be followed, including the following:

Read all instructions before using this appliance.

WARNING - To reduce the risk injury to persons:

1. Do not operate under blanket.
2. Operate the machinery with ample free space around it to easily get on and off the machine.
3. This exercise equipment is not intended for use by persons with reduced physical, sensory or mental capabilities, or lack of experience and knowledge.
4. Keep children and pets away from the machine at all times. DO NOT leave children unattended in the same room with the machine.
5. Use this appliance only for its intended use as described in this manual. Do not use attachments not recommended by the manufacturer.
6. Never operate this appliance if it is not working properly, if it has been dropped or damaged, or dropped into water. Return the appliance to a service center for examination and repair.
7. Keep the appliance away from heated surfaces.
8. Never operate the appliance with the air openings blocked. Keep the air openings free of lint, hair, and the like.
9. Never drop or insert any object into any opening.
10. Do not use outdoors.
11. The appliance is intended for household use.
12. After assembly, make sure to tighten all nuts and bolts.

- Do not operate equipment on deeply padded, plush or shag carpet. Damage to both carpet and equipment may result.
- Before beginning this or any exercise program, consult a physician. This is especially important for persons over the age of 35 or persons with pre-existing health conditions.
- Keep hands away from all moving parts.
- Do not attempt to use your equipment for any purpose other than for the purpose it is intended.
- Wear proper shoes. High heels, dress shoes, sandals or bare feet are not suitable for use on your equipment. Quality athletic shoes are recommended to avoid leg fatigue.
- Wear proper clothing for exercising, loose clothing could become caught in the machine.
- Only one person at a time should use the machine.
- If the user experiences dizziness, nausea, chest pain, or any other abnormal symptoms, STOP the workout at once. CONSULT A PHYSICIAN IMMEDIATELY.
- Do not place any sharp object around the machine.
- Always use caution when moving and storing your equipment.
- **User Weight Limit: 300 LB**

Please ensure that you review and adhere to the user weight restrictions and power requirements of your new machine. Failure to do so may result in serious injury or damage to your machine.

PARTS OF YOUR ROWER

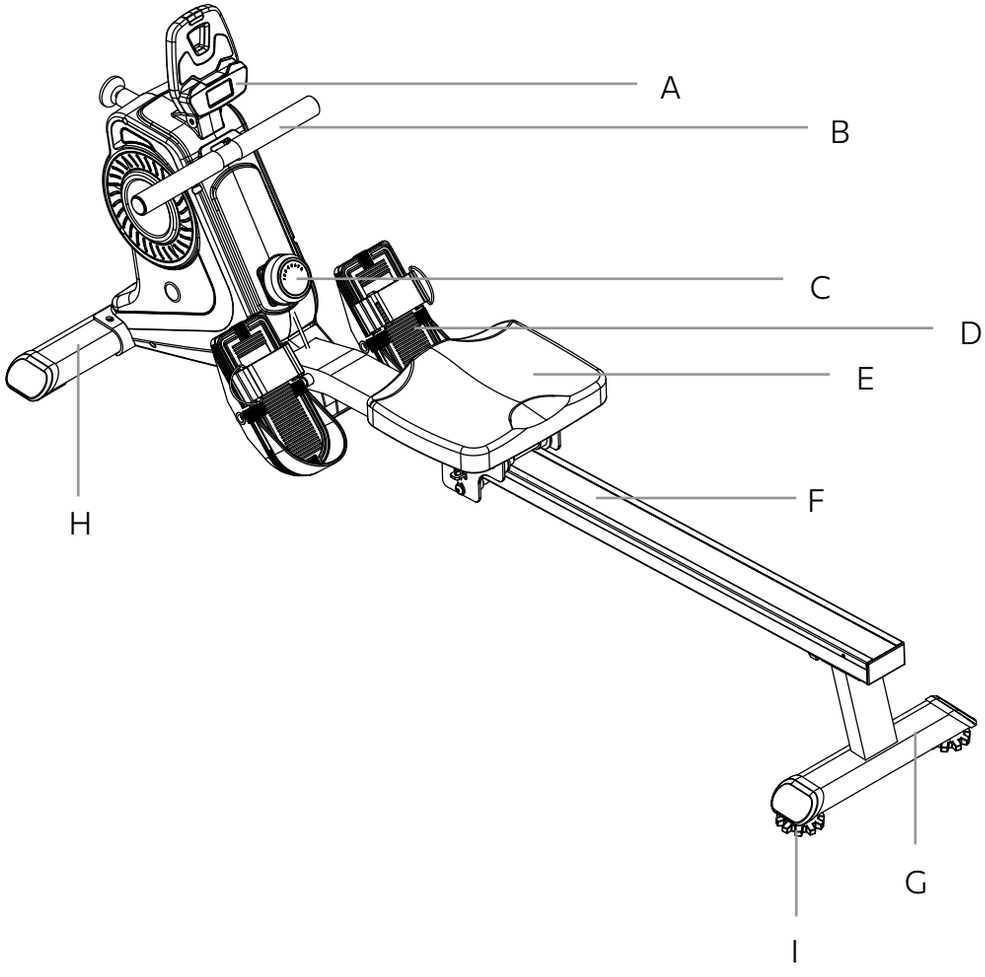

A. Console
B. Handlebar
C. Resistance Knob
D. Pedals
E. Seat
F. Slide Rail
G. Rear Stabilizer
H. Front Stabilizer
I. Levelers

PARTS INCLUDED

TOOLS INCLUDED:

- ❑ Allen Wrench
- ❑ Wrench

PARTS INCLUDED:

- ❑ Main Frame
- ❑ Slide Rail
- ❑ Front Stabilizer
- ❑ Rear Stabilizer
- ❑ Pedals (L , R)
- ❑ Seat
- ❑ Console

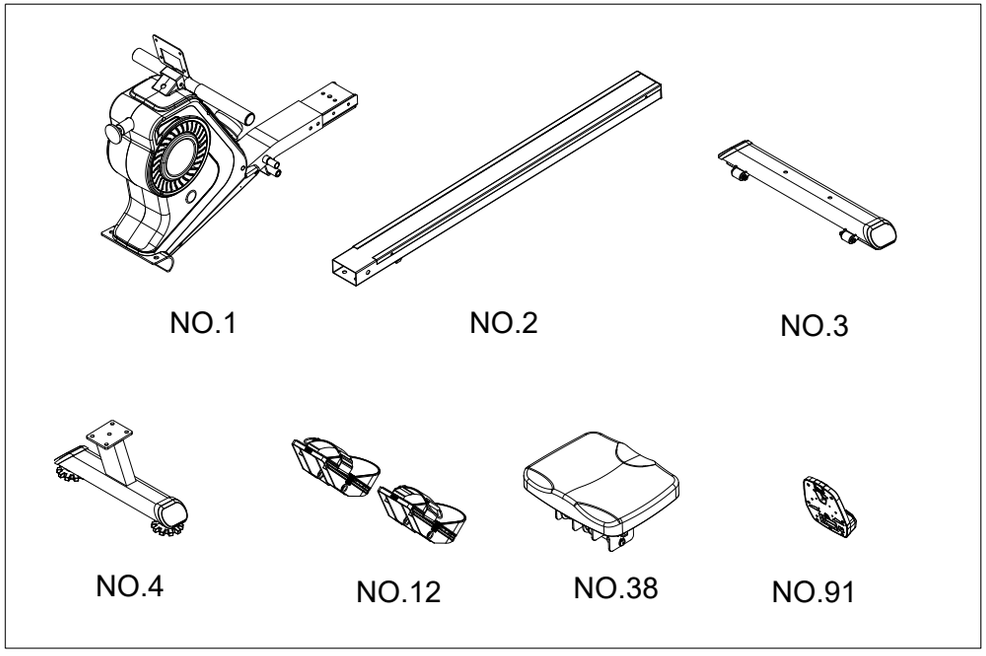

PARTS INCLUDED

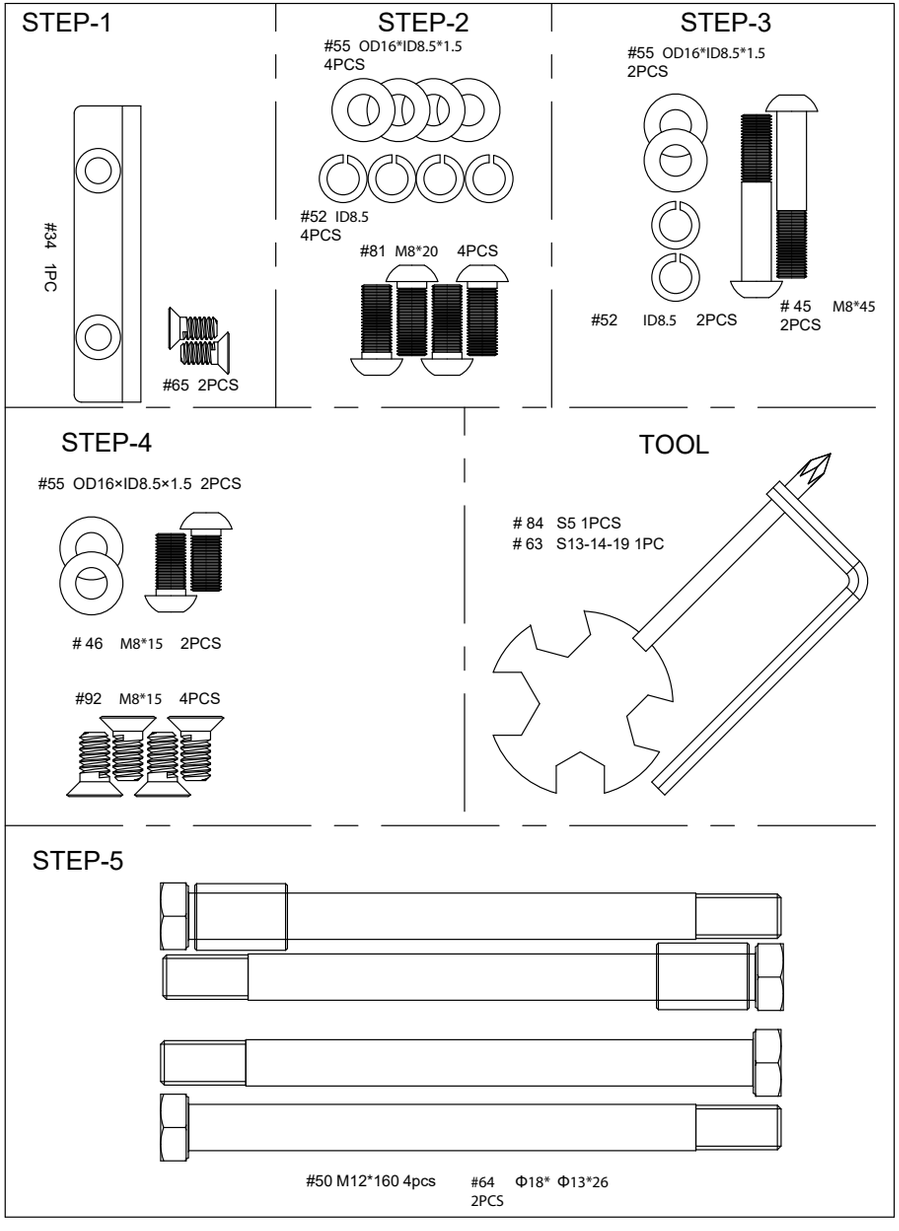

ASSEMBLY

1. Slide the **Seat (38)** onto the **Slide Rail (2)**. Attach **Limited Pad (34)** to the back of **Slide Rail (2)** and secure with two **Cross-head Screws (65)**.

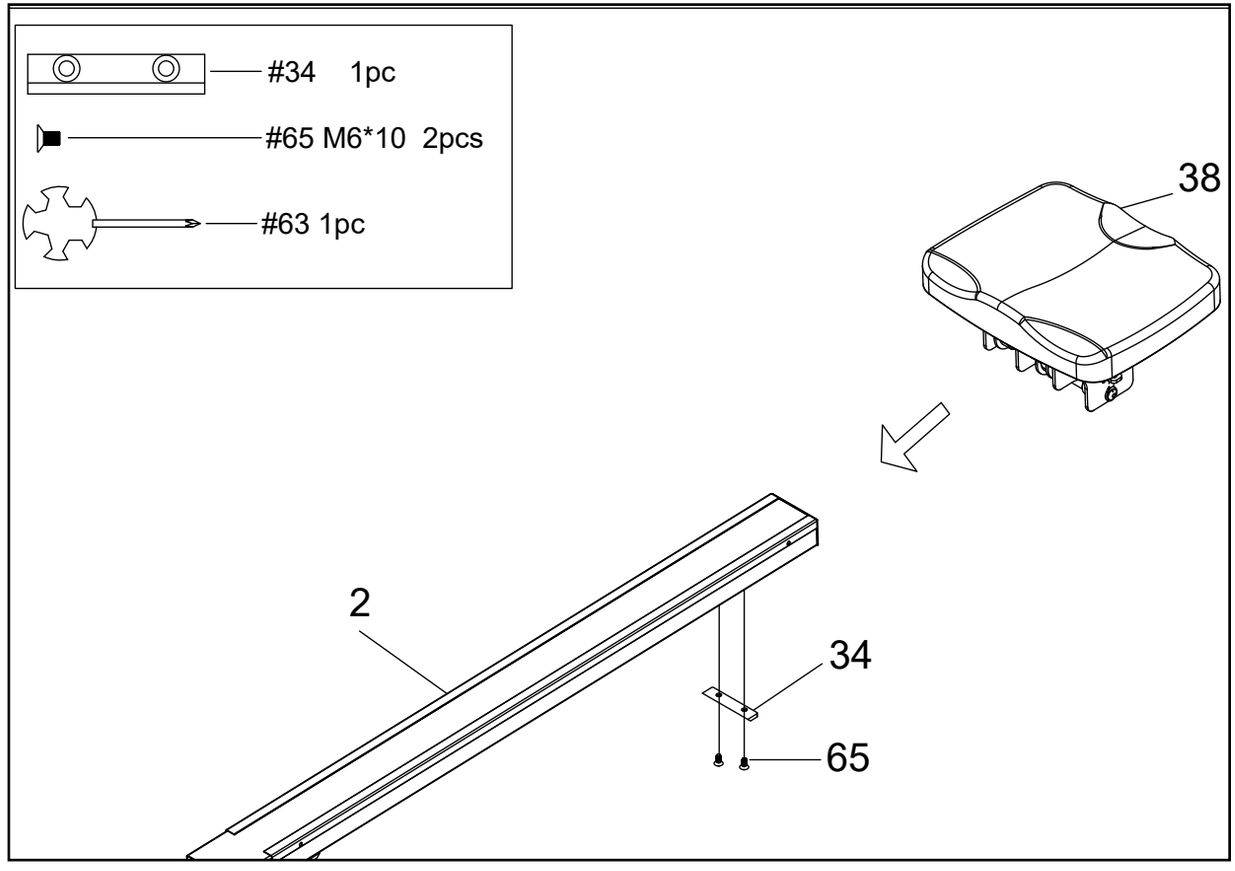

ASSEMBLY - CONTINUED

2. Attach the **Rear Support tube (4)** to the **Slide Rail (2)**, tighten with 4 **Flat Washers (55)** and 4 **Spring Washers (52)** and 4 **Allen bolts (81)**.

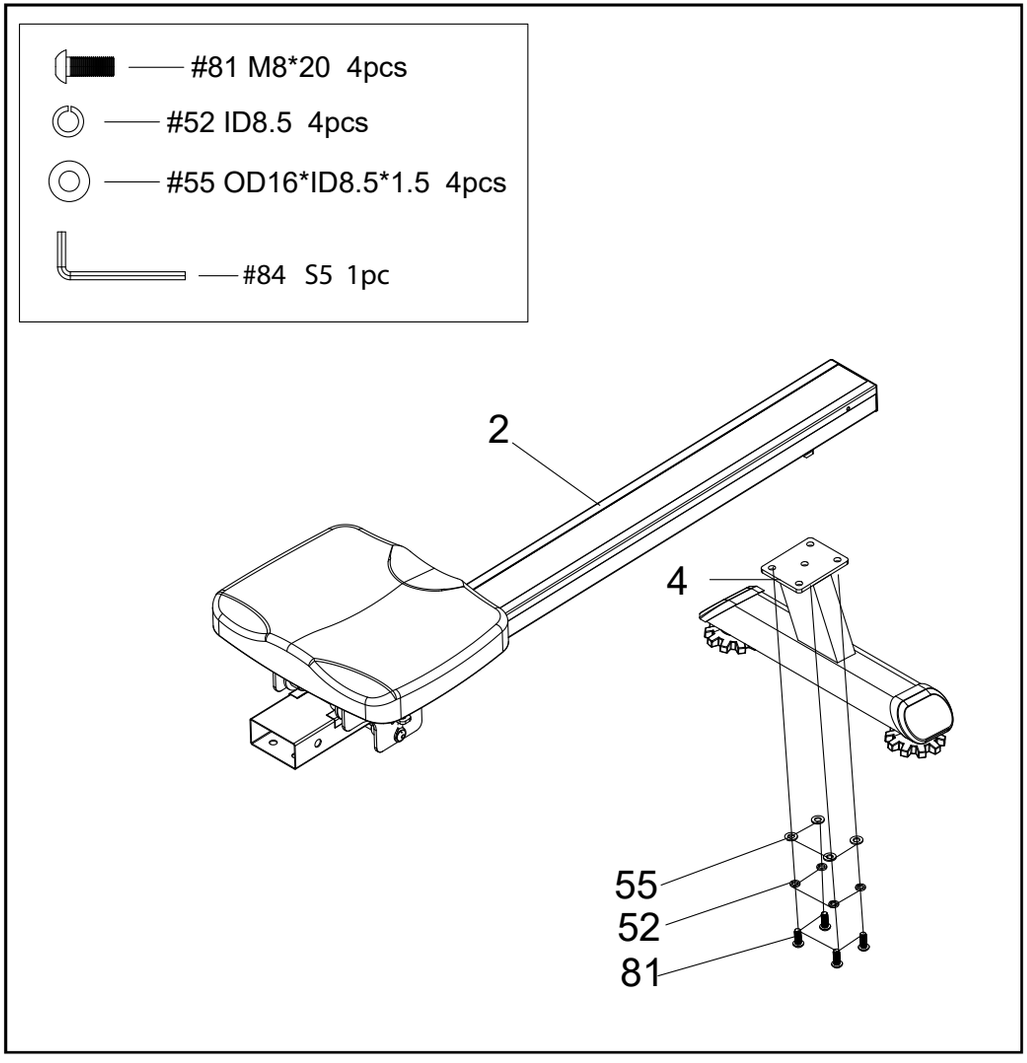

ASSEMBLY - CONTINUED

3. Attach the **Front Stabilizer tube (3)** to the **Main frame (1)**, tighten with 2 **Flat Washers (55)** and 2 **Spring Washers (52)** and 2 **Allen bolts (45)**.

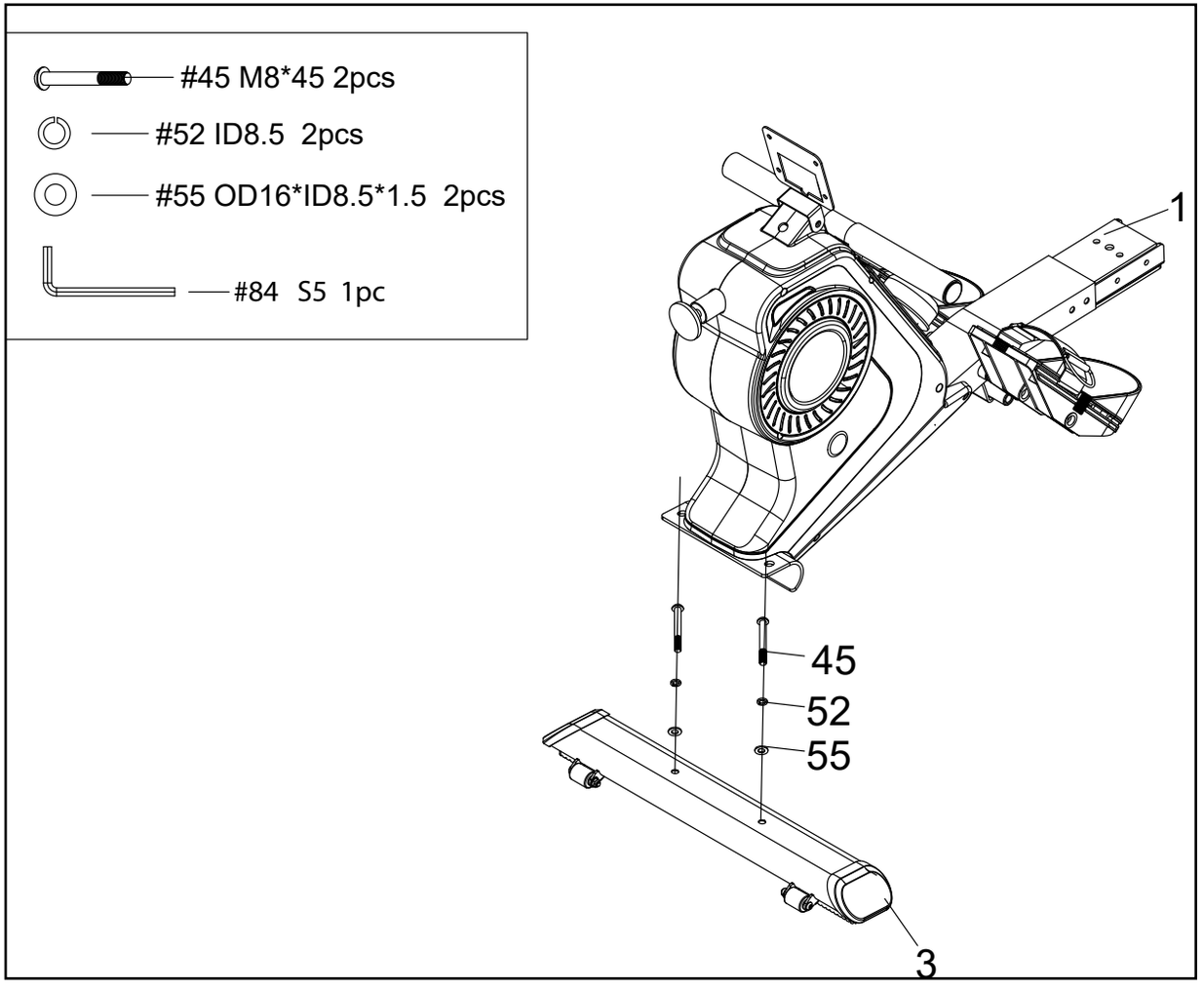

ASSEMBLY - CONTINUED

4. Insert the **Slide Rail (2)** into the **Main frame (1)**, tighten with 2 **Flat Washers (55)** and 2 **Allen bolts (46)** and 4 **Allen bolts (92)**.

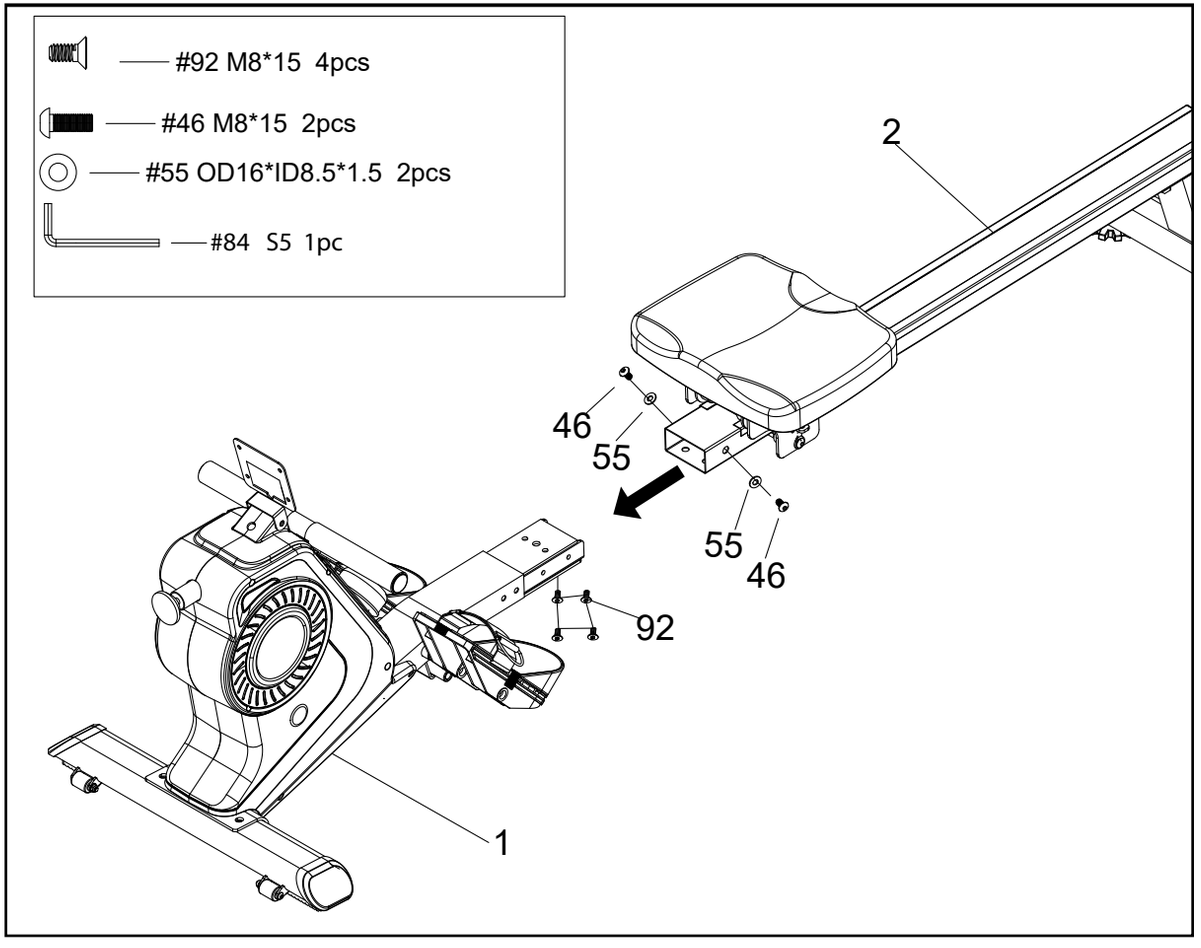

ASSEMBLY - CONTINUED

5. Screw 1 **Hex Head Bolt (50)** to upper hole of **Main Frame (1)** through left **Pedal (12L)** and a **Sleeve (64)**. Then screw another **Hex Head Bolt (50)** to lower hole of **Main Frame (1)**.

Repeat for right **Pedal (12R)** to **Main Frame (1)**.

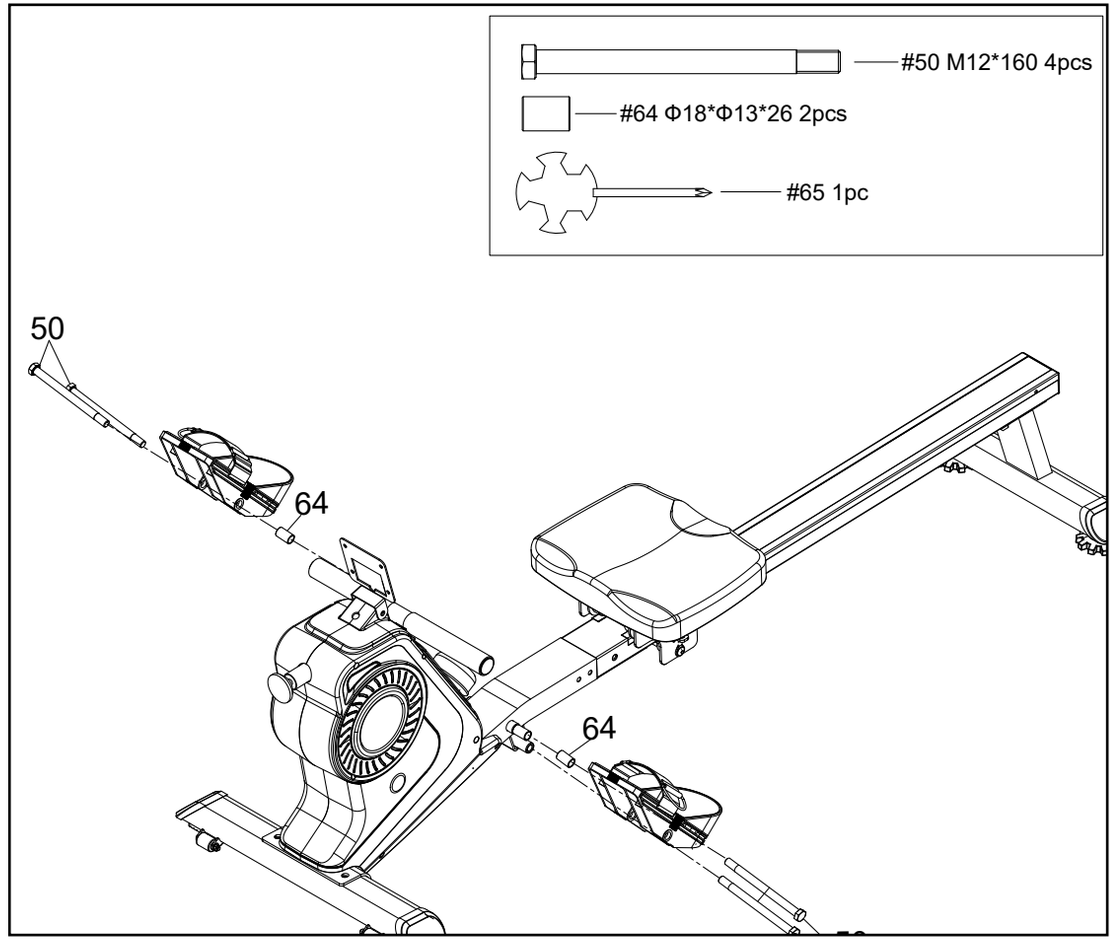

ASSEMBLY - CONTINUED

6. Take off 4 **Cross-Head Screws (65)** which are pre-assembled on the back of **Console (91)**.Connect **Sensor Wires (40)** with sensor wires from the back of **Console (91)**.

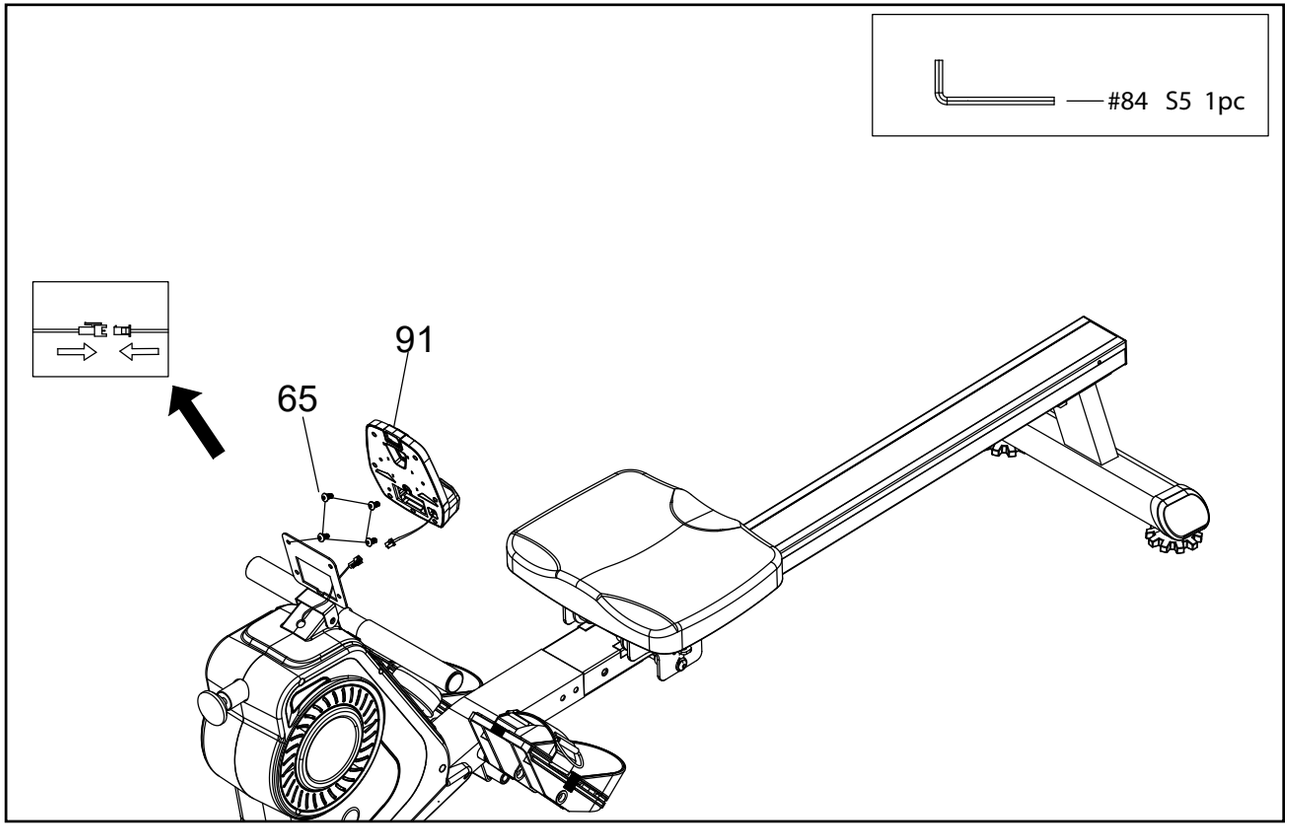

ADJUSTING YOUR MACHINE

Adjusting the Balance

Adjust the end cap for **Rear Support Tube (79)** of the machine if the machine is unbalanced during use.

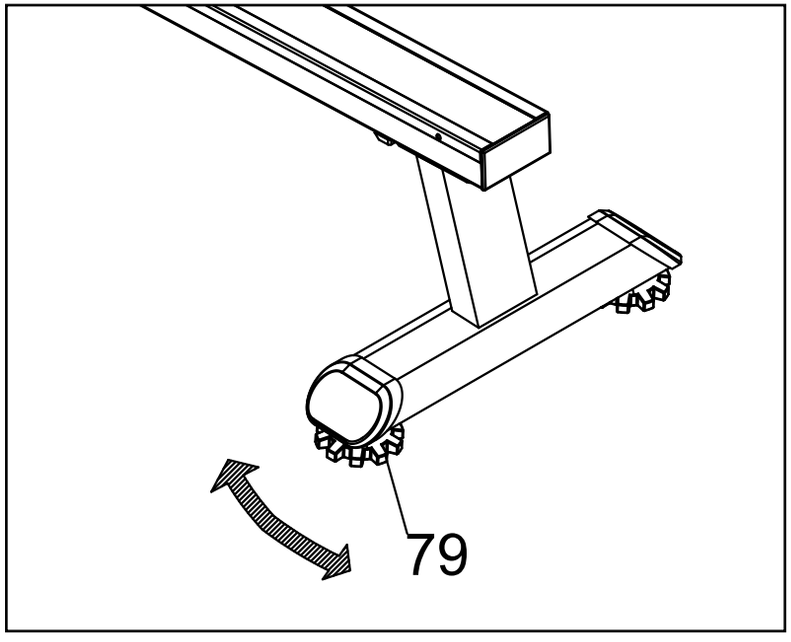

Pedal Adjustment

To adjust the pedal strap, remove the Velcro end of the strap from the mesh side by pulling it upward then to the left.

Once removed, you may increase the opening of the pedal strap by pulling the mesh end up and to the right.

To tighten, pull the Velcro end of the pedal strap upward then to the right and down to secure it to the mesh side of the strap.

ADJUSTING YOUR MACHINE - CONTINUED

Moving the Machine

The front stabilizer has built-in transport wheels. Stand at the front of the machine and lift it up until the weight of the machine is transferred to the transport wheels. You can now easily move the machine to a new location.

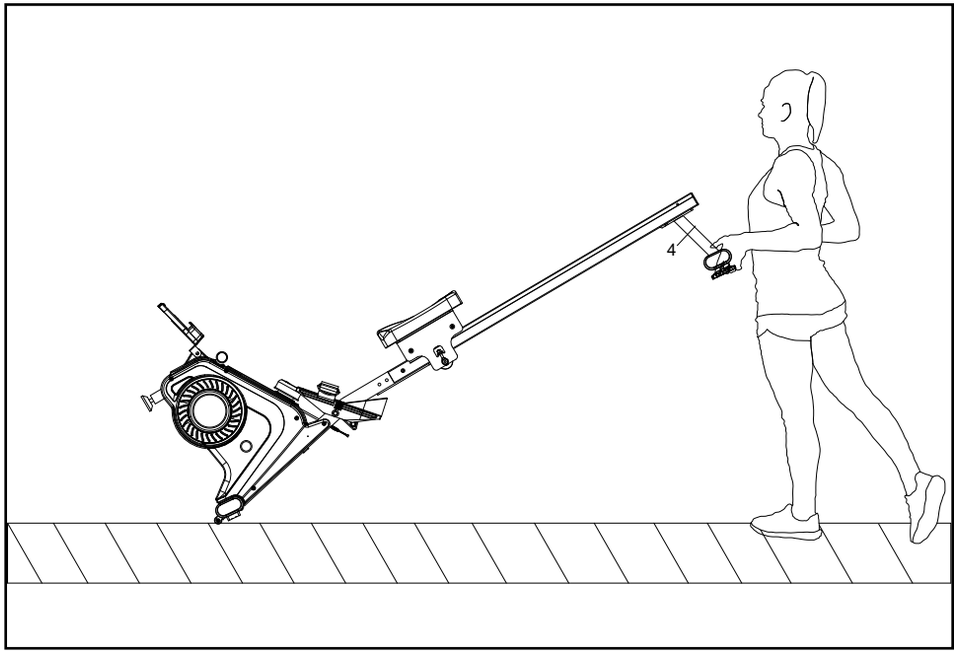

! Moving parts, such as the seat, could crush and cut your body. Please do not touch the slide rail when using the machine!

ADJUSTING YOUR MACHINE - CONTINUED

Storing the Machine

When not in use, you can save space by storing the rower vertically. Move with caution when you raise the rower up, as your head may touch the Rear Stabilizer. When you stand the rower up, the seat will slide down.

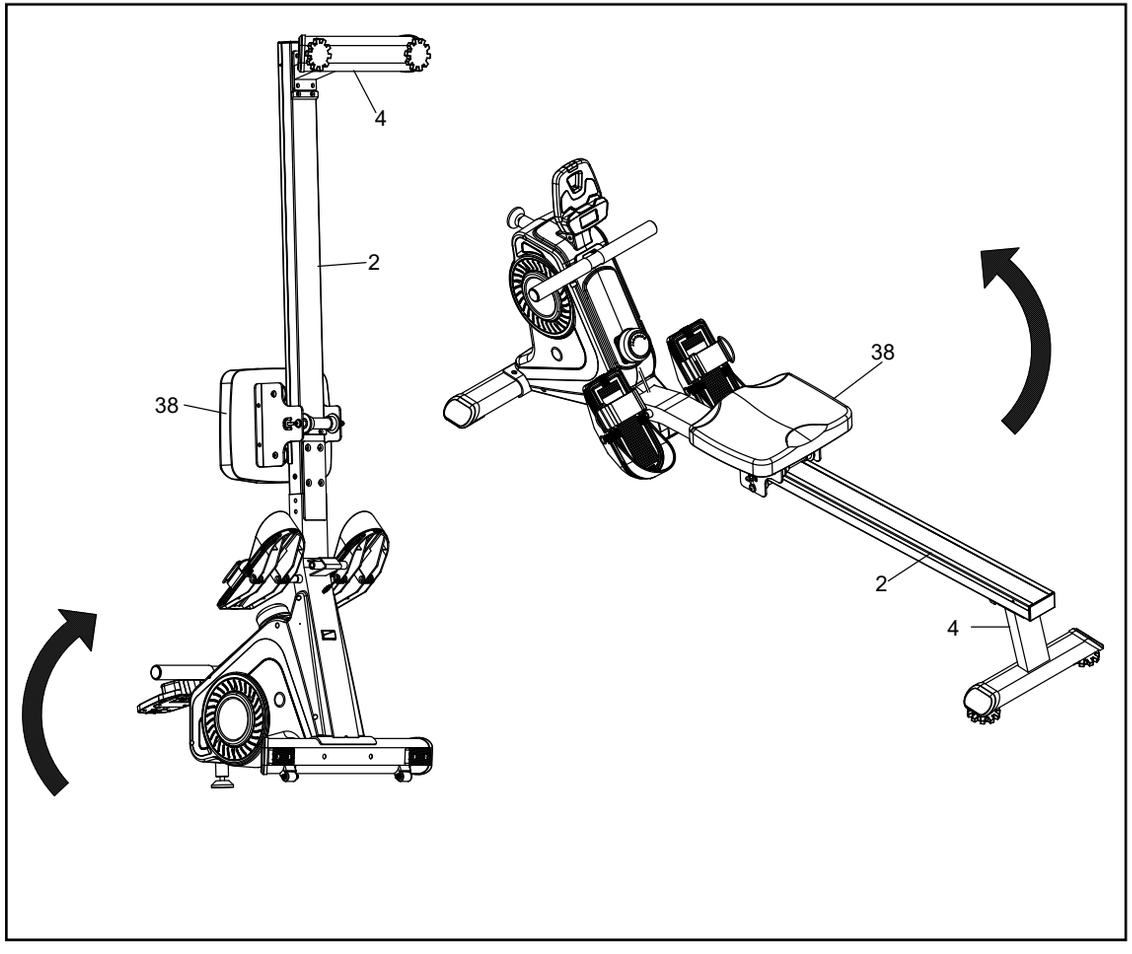

ABOUT YOUR MACHINE

Always use care and caution when operating your machine. Follow instruction in this manual to ensure safe operation and maintenance of your rower

Your new XTERRA Fitness rower has Bluetooth connectivity to give you access to the most advanced workout experiences available. Follow the instructions on page 20 & 21 to learn more about using the Bluetooth capabilities to their fullest potential.

Downloading the XF Connect app will help unlock more features - such as tracking workouts and sharing data via Google Fit and Apple Fitness. Simply search for "XF Connect" in the app store on your smartphone or tablet, or scan the QR code on the right



The XF Connect app is available on Google Play and the Apple App Store. Scan the QR Code below, and quickly and easily sign up to start taking your workout experience to a whole new level.

Available on the App Store

GET IT ON Google play

Be sure to follow XTERRA Fitness on your favorite social media platforms to view and share the latest fitness videos, images, and news.

facebook.com/XterraFitness

www.instagram.com/XterraFitness

youtube.com/user/XterraFitnessOnline

USING THE XF CONNECT APP

In order to help you achieve your exercise goals, your new exercise machine comes equipped with a Bluetooth® transceiver that will allow it to interact with selected phones or tablet computers via the XF Connect App. Just download the free XF Connect App from the Apple Store or Google Play, and then follow the instructions in the App to sync with your exercise machine.

Press the “DISPLAY” button from the APP to view the display of the current workout data. When your exercise is complete, choose “END & SAVE WORKOUT” to store the workout data.

1. Download the App by scanning the QR code on the right.
2. Open the App on your device (phone or tablet) and make sure Bluetooth® is enabled on your device (phone or tablet).
3. In the App click the Bluetooth® icon to search for your XF Connect equipment.
4. Under the Bluetooth® scan result list, select the machine for connect. When the App and equipment are synced, the Bluetooth® icon on the equipment’s console display will light up. Click “DISPLAY”, you may now start using your XF Connect App.
5. When your exercise is complete, choose “END & SAVE WORKOUT” to store the workout data. You will be prompted to sync your data with each available fitness cloud site. Please note, you will have to download the applicable compatible fitness App, such as Strava, MapMyFitness, Fitbit, etc., in order for the icon to be active and available.

Note: Your device will need to be running on a minimum operating system of IOS 13.1 or Android 8.0 for the XF Connect App to operate properly.



APP CONNECTION

This console connects to 3rd party fitness apps on your phone or tablet via Bluetooth. Once console is connected to your phone or tablet via Bluetooth, the console will not display. Your workout feedback will be displayed on your device.

KINOMAP

1. Open the Kinomap App and click in the lower right corner to add devices.
2. Click equipment management, then click the “+” to start adding equipment.
3. Click the “Rower” graphic, then scroll through brand connection screen to find and select FTMS or XTERRA.
4. Select Rower Machine, then Bluetooth device.
5. Press the Home Button to return to the Home screen after adding the device.
6. To select a training video, you must select the type of walk and press the button to enter the training screen.
7. When stop exercising for 4 seconds, the display will stop calculating and a ”STOP” will be displayed.
8. From the pause screen you can continue the workout or exit to end the workout.

Note: This machine is compatible with other 3rd party fitness apps using FTMS protocol.

CONSOLE SCREEN - OVERVIEW



SPECIFICATIONS

Function	Scan	Every 6 Seconds
	Time	0:00 - 99:59
	Count	0 - 9999 Times
	Distance	0 - 9999 Meters
	Calories	0 - 9999 Cal
	SPM	0 - 999 Times / Min
	Pulse	60 - 240 BPM
Battery Type		2pcs of Size AA
Operating Temperature		0c - +40c
Storage Temperature		-10c - +60c

FUNCTION BUTTONS

- **MODE** – Push down to select functions.
  Push down to reset time, count, distance and calories for 2 seconds.
- **SET** – To set the values of time, count, distance and calories when not in scan mode.

FUNCTIONS AND OPERATIONS:

1. SCAN: Press the “MODE” button to select the function to “TIME”, at which time the “SCAN” words appear on the left of the monitor and monitor will rotate through all the 6 functions:Time, count, distance, calorie, SPM and pulse. Each display will be hold 6 seconds. In the process of cyclic display of Each function, press “MODE” button once to make the “SCAN” disappear in any function mode to display this function.If you want to return to “SCAN” again, press the “MODE” button to select the function to “TIME”.In “SCAN” mode, the “SCAN” word on the left of the monitor flashes continuously.
2. TIME: Display the time from exercise start to end.
3. COUNT: Display the number of counts from exercise start to end.
4. DISTANCE: Display the distances from exercise start to end.
5. CALORIES: Display the calories burned from exercise start to end.
6. SPM: Display the strokes per minute.
7. PULSE: Display the current heart rate value of the user (Please wear the wireless heartbeat chest belt before measuring the heart rate,the measurement value can not be regarded as the basis of medical treatment).

TARGET TRAINING SETTINGS

This computer has four target training modes: time, count, distance and calories (when switching to the target function, if there is “SCAN” font flashing on the display, you need to press the “MODE” button again to make the “SCAN” font disappear before setting)

1. TIME target training mode: first press the “MODE” button to switch to the “TIME” function, and then press the “SET” button to set the target time (Press and hold the SET button to speed up the setting). when it reaches the required time, stop the button. Then start to use the machine, and the display will start to count down. When the count down reaches zero, the time function flashes to indicate the completion of the training target. At this time, if you continue to train, the computer will automatically start to count up from zero.
2. COUNT target training mode: first press the “MODE” button to switch to the “COUNT” function, and then press the “SET” button to set the target count (Press and hold the SET button to speed up the setting). when it reaches the required count, stop the button. Then start to use the machine, and the display will start to count down. When the count down reaches zero, the count function flashes to indicate the completion of the training target, if you continue to train, the computer will automatically start to count up from zero.
3. DISTANCE target training mode: first press the “MODE” button to switch to the “DIST” function, and then press the “SET” button to set the target distance (Press and hold the SET button to speed up the setting). when it reaches the required distance, stop the button. Then start to use the machine, and the display will start to count down. When the count down reaches zero, the distance function flashes to indicate the completion of the training target. At this time, if you continue to train, the computer will automatically start to count up from zero.
4. CALORIE target training mode: first press the “MODE” button to switch to the “CAL” function, and then press the “SET” button to set the target calorie (Press and hold the SET button to speed up the setting). when it reaches the required calorie, stop the button. Then start to use the machine, and the display will start to count down. When the count down reaches zero, the calorie function flashes to indicate the completion of the training target. At this time, if you continue to train, the computer will automatically start to count up from zero.
5. If you want to modify the target value during or after setting, please press and hold the “MODE” button for about 2 seconds to clear all settings, and then reset according to the previous description. If you want to modify the target data after the setting process or completion, press “RESET” button directly to clear all settings, and then reset according to the previous description.

NOTE

1. If the battery symbol on the display lights up, please replace the battery.
2. The monitor will automatically shut off if there is no signal received after 2 minutes.
3. The monitor will be auto powered on when starting to exercise push button signal in.
4. When you stop exercising for 4 seconds, the display will stop calculating and a ”STOP” will be displayed on the screen. When you start exercising, the display will automatically start calculating and the ”STOP” will disappear.

HEART RATE CHEST STRAP* (NOT INCLUDED)

1. Attach the transmitter to the elastic strap using the interlocking key.
2. Adjust the strap as tightly as possible as long as the strap is not too tight to remain comfortable.
3. Position the transmitter with the logo centered in the middle of your torso facing away from your chest (some people must position the transmitter slightly left of center). Attach the final end of the elastic strap by inserting the round end and, using the locking parts, secure the transmitter and strap around your chest.
4. Position the transmitter directly below the pectoral muscles.
5. Sweat is the best conductor to measure very minute heart beat electrical signals. However, plain water can also be used to pre-wet the electrodes (2 ribbed oval areas on the reverse side of the belt and both sides of the transmitter). It's also recommended that you wear the transmitter strap a few minutes before your work out. Some users, because of body chemistry, have a more difficult time in achieving a strong, steady signal at the beginning. After "warming up", this problem lessens.
6. Your workout must be within range - distance between transmitter/receiver – to achieve a strong steady signal. The length of range may vary somewhat but generally stay close enough to the console to maintain good, strong, reliable readings. Wearing the transmitter directly on bare skin assures you of proper operation. If you wish, you may wear the transmitter over a shirt. To do so, wet the areas of the shirt that the electrodes will rest upon.

Note: The transmitter is automatically activated when it detects activity from the user's heart. Additionally, it automatically deactivates when it does not receive any activity. Although the transmitter is water resistant, moisture can have the effect of creating false signals, so you should take precautions to completely dry the transmitter after use to prolong battery life (estimated transmitter battery life is 2500 hours). The replacement battery is Panasonic CR2032.

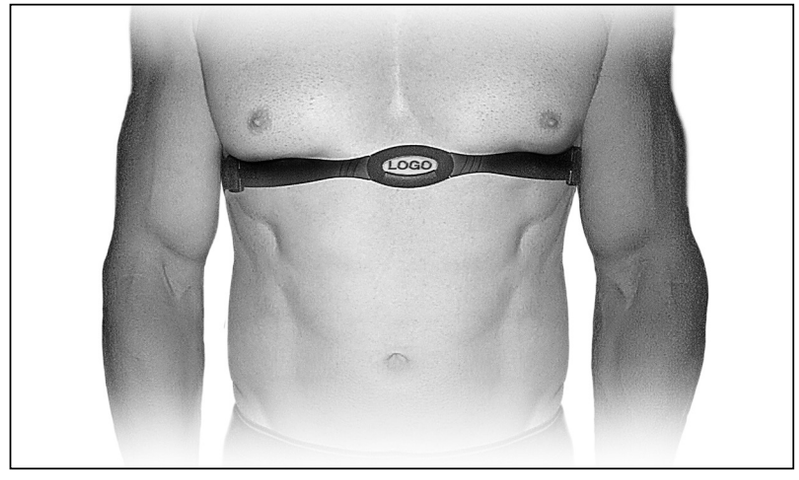

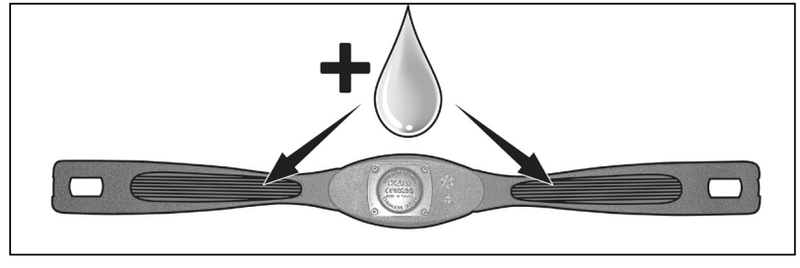

CHEST STRAP WARNING* (NOT INCLUDED)

Erratic Operation

Caution! Do not use this rower for Heart Rate programs unless a steady, solid Actual Heart Rate value is being displayed. High, wild, random numbers being displayed indicate a problem.

Areas to look for interference which may cause erratic heart rate:

1. Microwave ovens, TV's, small appliances, etc.
2. Fluorescent lights.
3. Some household security systems.
4. Perimeter fence for a pet.
5. Some people have problems with the transmitter picking up a signal from their skin. If you have problems try wearing the transmitter upside down. Normally the transmitter will be oriented so the XTERRA Fitness logo is right side up.
6. The antenna that picks up your heart rate is very sensitive. If there is an outside noise source, turning the whole machine 90 degrees may de-tune the interference.
7. Another Individual wearing a transmitter within 3' of your machine's console.

If you continue to experience problems contact XTERRA Fitness.

HEART RATE EXERTION

The old motto, “no pain, no gain”, is a myth that has been overpowered by the benefits of exercising comfortably. A great deal of this success has been promoted by the use of heart rate monitors. With the proper use of a heart rate monitor, many people find that their usual choice of exercise intensity was either too high or too low and exercise is much more enjoyable by maintaining their heart rate in the desired benefit range.

To determine the benefit range in which you wish to train, you must first determine your Maximum Heart Rate. This can be accomplished by using the following formula: 220 minus your age. This will give you the Maximum Heart Rate (MHR)for someone of your age. To determine the effective heart rate range for specific goals you simply calculate a percentage of your MHR. Your Heart rate training zone is 50% to 90% of your maximum heart rate. 60% of your MHR is the recommended for burning fat while 80% is recommended for strengthening the cardio vascular system. This 60% to 80% is the zone to stay in for maximum benefit.

For someone who is 40 years old their
target heart rate zone is calculated:
220 – 40 = 180 (maximum heart rate)
180 x .6 = 108 beats per minute (60% of maximum)
180 X .8 = 144 beats per minute (80% of maximum)
So for a 40 year old the training zone would
be 108 to 144 beats per minute.

If you enter your age during programming the console will perform this calculation automatically. Entering your age is used for the Heart Rate programs. After calculating your MHR you can decide upon which goal you would like to pursue.

The two most popular reasons for, or goals, of exercise are cardiovascular fitness (training for the heart and lungs) and weight control. The black columns on the chart represent the MHR for a person whose age is listed at the bottom of each column. The training heart rate, for either cardiovascular fitness or weight loss, is represented by two different lines that cut diagonally through the chart. A definition of the lines’ goal is in the bottom left-hand corner of the chart. If your goal is cardiovascular fitness or if it is weight loss, it can be achieved by training at 80% or 60%, respectively, of your MHR on a schedule approved by your physician. Consult your physician before participating in any exercise program.

With this XTERRA Fitness unit you may use the heart rate monitor feature without using the Heart Rate program. However, when using the heart rate monitor feature in conjunction with the Heart Rate programs, the machine will automatically adjust speed or incline to maintain the desired heart rate.

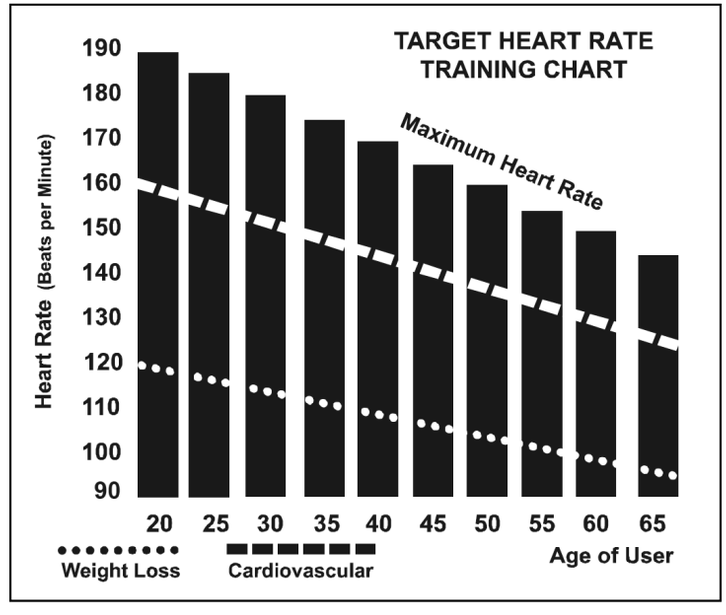

HEART RATE - PERCEIVED EXERTION

Heart rate is important but listening to your body also has a lot of advantages. There are more variables involved in how hard you should workout than just heart rate. Your stress level, physical health, emotional health, temperature, humidity, the time of day, the last time you ate and what you ate all contribute to the intensity at which you should workout. If you listen to your body it will tell you all of these things.

The rate of perceived exertion (RPE), also known as the Borg scale, was developed by Swedish physiologist G.A.V. Borg. This scale rates exercise intensity from 6 to 20 depending upon how you feel or the perception of your effort.
The scale is found to the side of the page:

You can get an approximate heart rate level for each rating by simply adding a zero to each rating. For example a rating of 12 will result in an approximate heart rate of 120 beats per minute. Your RPE will vary depending on the factors discussed earlier. If your body is strong and rested, you will feel strong and your pace will feel comfortable. When your body is in this condition, you are able to train harder and the RPE will support this. If you are feeling tired and sluggish, it is because your body needs a break. In this condition, your pace will feel difficult. Again, this will show up in your RPE and you will train at the proper level for that day.

Rating Perception of Effort

6	Minimal
7	Very, Very Light
8	Very, Very Light +
9	Very Light
10	Very Light +
11	Fairly Light
12	Comfortable
13	Somewhat Hard
14	Somewhat Hard +
15	Hard
16	Hard +
17	Very Hard
18	Very Hard +
19	Very, Very Hard
20	Maximal

MAINTENANCE & CARE

Post-Workout Machine Care

1. Store your machine in a dry and clean area when not in use.
2. Use a slightly damp cloth to clean areas where sweat or oil made contact with the machine.
3. Use a microfiber cloth to clean the display and remove unwanted oils and other things that may damage the screen.
4. Avoid leaving paper or other small debris in the cupholders.

Sanitizing Your XTERRA Fitness Equipment

- Unupholstered high-contact surfaces (hard plastics) can be sanitized using a 75% isopropyl alcohol solution and a clean, dry cloth. Spray surfaces to be sanitized, and use the dry cloth to wipe clean. Allow surfaces to dry before using.
- For upholstered or soft-plastic surfaces, use a conditioner after sanitizing. Be sure to follow the instructions provided by the conditioner manufacturer to ensure proper use of the conditioner.
- Alternatively, you can make your own spray by mixing the proper ratio of isopropyl alcohol and distilled water to reach a 75% solution.

EXPLODED VIEW DIAGRAM

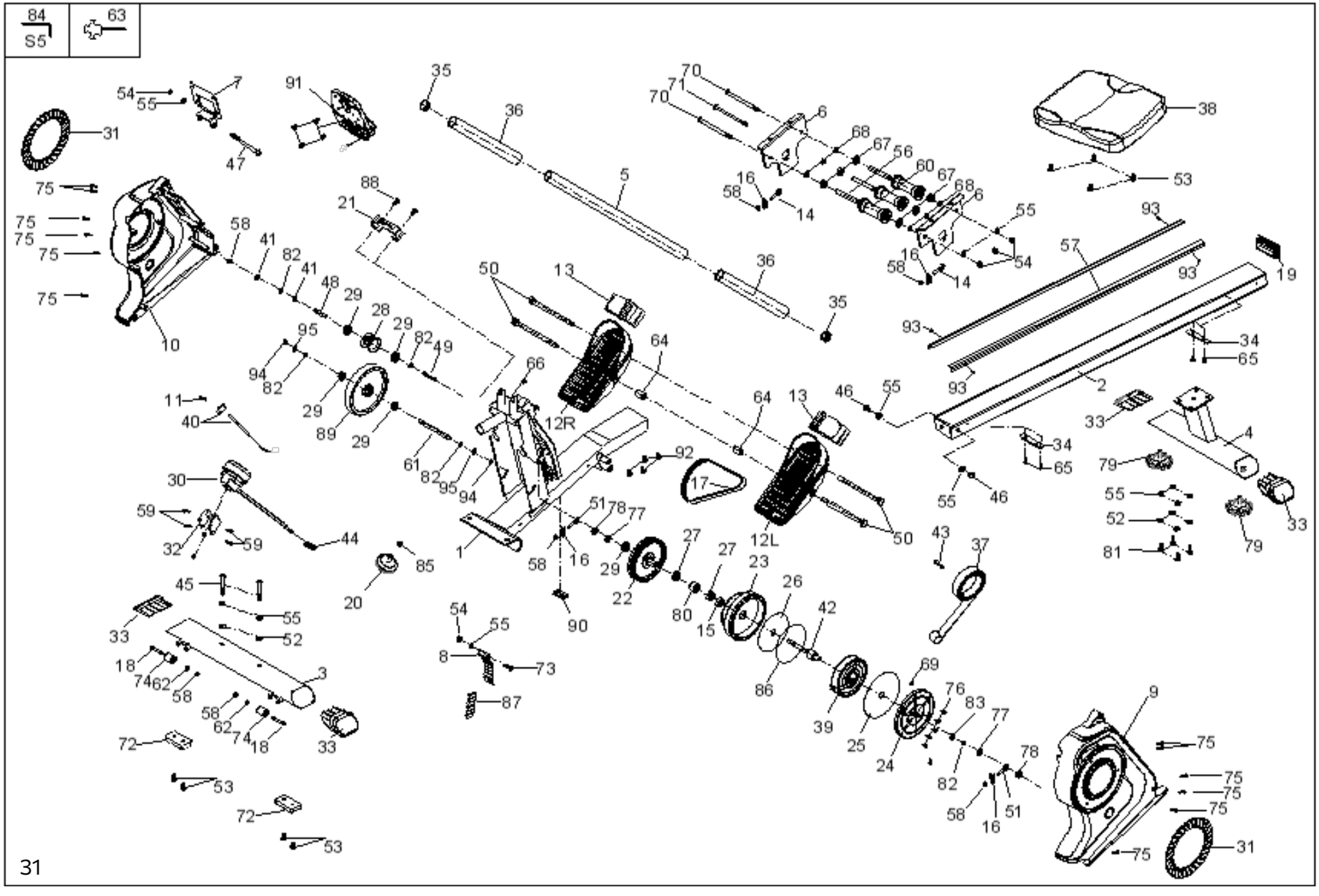

WARRANTY - RESIDENTIAL

Effective August 01, 2023- **ERG180 Rower LIMITED WARRANTY**

XTERRA Fitness Inc. warrants all its home use Rower parts for a period of time listed below, from the date of retail sale, as determined by a sales receipt or in the absence of a sales receipt, eighteen (18) months from the original factory shipping date. XTERRA Fitness's responsibilities include providing new or remanufactured parts, at XTERRA Fitness's option, and technical support to our independent dealers and servicing organizations. In the absence of a dealer or service organization, these warranties will be administered by XTERRA Fitness directly to a consumer. The warranty period applies to the following components:

Home Use Limited Warranty

Warranty	Frame	Parts
Residential	1 Year	90 Days

RESPONSIBILITIES OF THE CONSUMER

This warranty applies only to products in ordinary household use, and the consumer/facility is responsible for the items listed below:

1. Proper use of the Rower in accordance with the instructions provided in this manual
2. Proper installation in accordance with instructions provided with the Rower and with all local electric codes.
3. Expenses for making the Rower accessible for servicing, including any item that was not part of the Rower at the time it was shipped from the factory.
4. Damages to the Rower finish during shipping, installation or following installation.
5. Routine maintenance of this unit as specified in this manual.

WARRANTY - CONTINUED

What is not covered?

EXCLUSIONS

This warranty does not cover the following:

1. CONSEQUENTIAL, COLLATERAL, OR INCIDENTAL DAMAGES SUCH AS PROPERTY DAMAGE AND INCIDENTAL EXPENSES RESULTING FROM ANY BREACH OF THIS WRITTEN OR ANY IMPLIED WARRANTY.
   Note: Some states do not allow the exclusion or limitation of incidental or consequential damages, so this limitation or exclusion may not apply to you.
2. Service call reimbursement to the consumer. Service call reimbursement to the dealer that does not involve malfunction or defects in workmanship or material, for units that are beyond the warranty period, for units that are beyond the service call reimbursement period, for Rower not requiring component replacement, or Rower not in ordinary household or light commercial use.
3. Damages caused by services performed by persons other than authorized XTERRA Fitness service companies; use of parts other than original XTERRA Fitness parts; or external causes such as corrosion, discoloration of paint or plastic, alterations, modifications, abuse, misuse, accident, improper maintenance, inadequate power supply, or acts of God.
4. Products with original serial numbers that have been removed or altered.
5. Products that have been: sold, transferred, bartered, or given to a third party.
6. XTERRA Fitness reserves the right to request proof of purchase if no warranty record exists for the product.
7. THIS WARRANTY IS EXPRESSLY IN LIEU OF ALL OTHER WARRANTIES EXPRESSED OR IMPLIED, INCLUDING THE WARRANTIES OF MERCHANTABILITY AND/OR FITNESS FOR A PARTICULAR PURPOSE.
8. Product use in any environment other than a residential setting or non-dues paying facility with 5 hours use or less per day.
9. Warranties outside of the United States may vary. Please contact your local dealer for details.

Product features or specifications as described or illustrated are subject to change without notice. All warranties are made by XTERRA Fitness, Inc. This warranty applies only in the 48 contiguous United States. NOTE: This does not include Alaska or Hawaii.

WARRANTY - CONTINUED

Responsibilities of the Owner

SERVICE

Keep your bill of sale. Twelve (12) months from the date on the bill of sale or eighteen (18) months from the date of factory shipping as determined by the serial number establishes the labor warranty period should service be required. If service is performed, it is in your best interest to obtain and keep all receipts. This written warranty gives you specific legal rights. You may also have other rights that vary from state to state. Service under this warranty must be obtained by following these steps, in order:

1. Contact your selling authorized XTERRA Fitness dealer. OR
2. Contact your local authorized XTERRA Fitness service organization.
3. If there is a question as to where to obtain service, contact our service department at (870) 935-1107.
4. XTERRA Fitness' obligation under this warranty is limited to repairing or replacing, at XTERRA Fitness' option, the product through one of our authorized service centers. All repairs must be preauthorized by XTERRA Fitness. If the product is shipped to a service center freight charges to and from the service center will be the customer's responsibility. For replacement parts shipped while the product is under warranty, the customer will be responsible for shipping and handling charges. For in-home service, the customer will be responsible for a trip charge. There will be an additional trip charge if the customer is located over 100 miles from the nearest service center.
5. The owner is responsible for adequate packaging upon return to XTERRA Fitness. XTERRA Fitness is not responsible for damages in shipping. Make all freight damage claims with the appropriate freight carrier. DO NOT SHIP ANY UNIT TO OUR FACTORY WITHOUT A RETURN AUTHORIZATION NUMBER. All units arriving without a return authorization number will be refused.

For any further information, or to contact our service department by mail, send your correspondence to:

XTERRA Fitness, Inc.

P.O. Box 2037

Jonesboro, AR 72402-2037

Product features or specifications as described or illustrated are subject to change without notice. All warranties are made by XTERRA Fitness, Inc. This warranty applies only in the 48 contiguous United States. NOTE: This does not apply to Alaska or Hawaii.

3000 Nestle Road Jonesboro, AR 72401 | Phone: 800-258-8511 | Fax: 870-935-7611

©2023 All Rights Reserved. ERG180 Owner's Manual