XTERRA® FITNESS

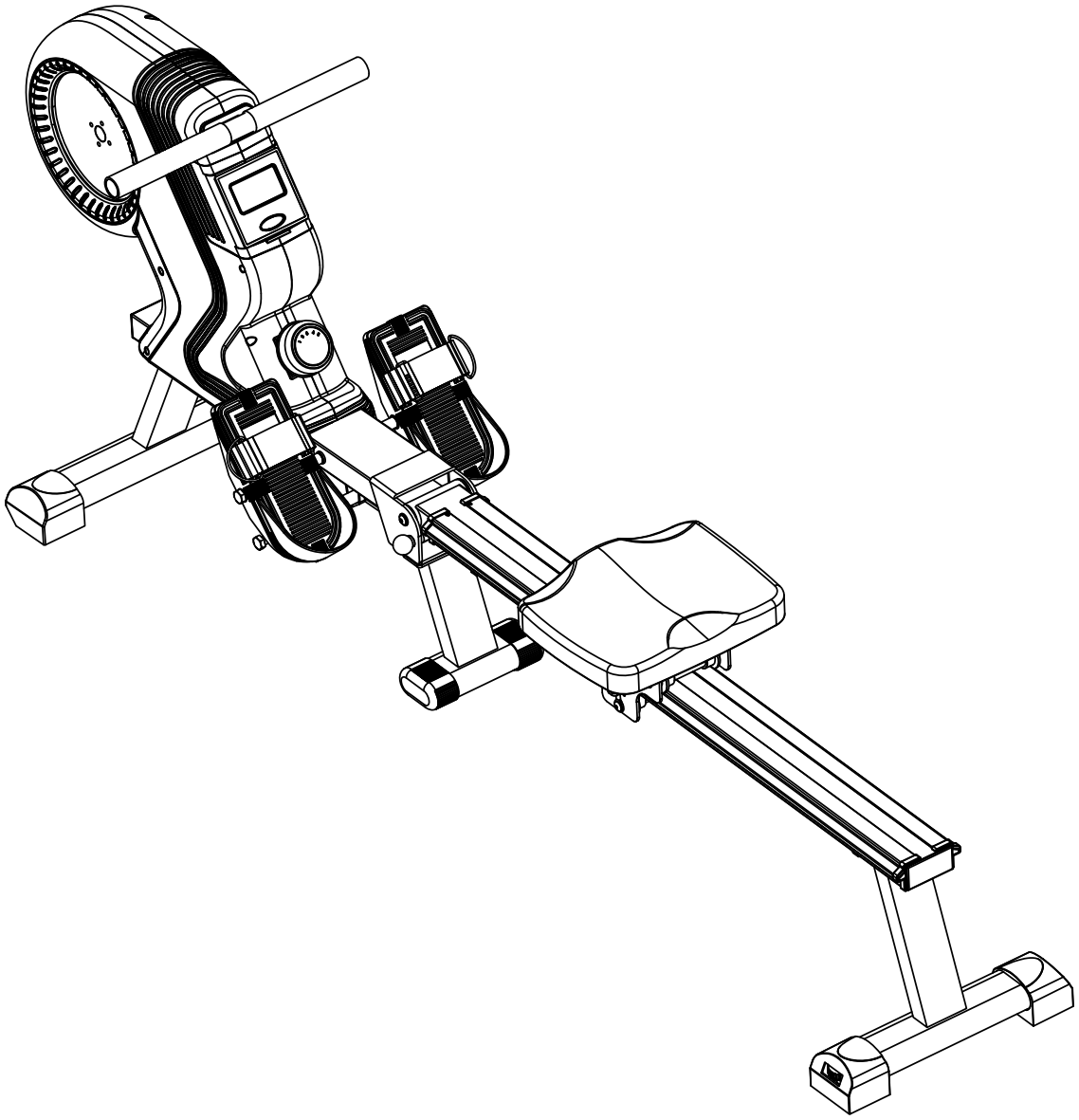

ERG220 ROWER
OWNER'S MANUAL

PLEASE CAREFULLY READ THIS ENTIRE MANUAL BEFORE OPERATING YOUR NEW ROWER

Congratulations On Your New Rower and Welcome to the XTERRA Fitness Family!

Thank you for your purchase of this quality rower from **XTERRA Fitness**. Your new rower has been manufactured by one of the leading fitness manufacturers in the world. **XTERRA Fitness** will do all we can to make your ownership experience as pleasant as possible for many years to come. If you have questions, or if parts are missing or damaged, or you require customer service, call (870) 333-5500. Please have your model number and serial number handy when you call.

Please take a moment to record where you purchased your machine, as well as the date of purchase for future reference. We appreciate your confidence in **XTERRA Fitness** and we will always remember that you are the reason that we are in business. Please complete and mail your registration card today and enjoy your new rower.

Yours in Health,
XTERRA Fitness

Table Of Contents

Product Registration	**1**
Important Safety Instructions	**2**
ERG220 Assembly Instructions	**4**
Adjustment Guides	**14**
Operation of Your Console	**16**
Troubleshooting	**18**
Manufacturer’s Limited Warranty	**19**

Product Registration

Purchase Location _____

Purchase Date _____

Record Your Serial Number
Please record the Serial Number of this fitness product
in the space provided below.

Serial Number _____

Register Your Purchase
The self-addressed product registration card must be completed in full and returned to **XTERRA Fitness**. You can also go to ***www.xterrafitness.com/warrantyreg.html*** to register online.

Manufacture's One-Year Limited Warranty

Your XTERRA rower machine is warranted for one year from the date of purchase against defects in material when used for the purpose intended, under normal conditions and provided it receives proper care. Any part found defective or missing will be sent at no cost when returned in accordance with the terms of this warranty.

This warranty is not transferable and is extended only to the original owner.

The warranty shall not apply to exercise units which are (1) used for commercial or other income producing purposes, or (2) subject to misuse, neglect, accident or unauthorized repair and alterations.

This warranty provided herein is lieu of all other express warranties, any implied warranties, including any implied warranties of merchantability of fitness for particular purpose, are limited in duration to the first 12 months from date of purchase. All other obligations or liabilities, including liability for consequential damages are hereby excluded.

ATTENTION

THIS ROWER IS INTENDED FOR **RESIDENTIAL USE ONLY** AND IS WARRANTED FOR THE APPLICATION. ANY OTHER APPLICATION **VOIDS** THIS WARRANTY IN ITS ENTIRETY.

Important Safety Instructions

When using an electrical appliance, basic precautions should always be followed.

Read all instructions before using this appliance. Some warnings below pertain to plug-in models only. Please use similar precautions when operating any machinery with a power source.

DANGER - To reduce the risk of electric shock always unplug this appliance from the electrical outlet immediately after using and before cleaning.

WARNING - To reduce the risk of burns, fire, electric shock, or injury to persons:

1. An appliance should never be left unattended when plugged in. Unplug from outlet when not in use, and before putting on or taking off parts.
2. Do not operate under blanket or pillow. Excessive heating can occur and cause fire, electric shock, or injury to persons.
3. This exercise equipment is not intended for use by persons with reduced physical, sensory or mental capabilities, or lack of experience and knowledge.
4. Use this appliance only for its intended use as described in this manual. Do not use attachments not recommended by the manufacturer.
5. Never operate this appliance if it has a damaged cord or plug, if it is not working properly, if it has been dropped or damaged, or dropped into water. Return the appliance to a service center for examination and repair.
6. Do not carry this appliance by the power supply cord or use cord as a handle.
7. Keep the cord away from heated surfaces.
8. Never operate the appliance with the air openings blocked. Keep the air openings free of lint, hair, and the like.
9. Never drop or insert any object into any opening.
10. Do not use outdoors.
11. Do not operate where aerosol (spray) products are being use or where oxygen is being administered.
12. Connect this appliance to a properly grounded outlet only.
13. The appliance is intended for household use.



WARNING: This product can expose you to chemicals including Toluene and Acrylamide which are known to the State of California to cause cancer and birth defects or other reproductive harm.
For more information go to www.P65Warnings.ca.gov

Fitness Equipment Safety Instructions

- To disconnect, turn all controls to the off position, then remove the plug from the outlet.
- Do not operate equipment on deeply padded, plush or shag carpet. Damage to both carpet and equipment may result.
- Before beginning this or any exercise program, consult a physician. This is especially important for persons over the age of 35 or persons with pre-existing health conditions.
- Keep hands away from all moving parts.
- The pulse sensors are not medical devices. Various factors, including the user's movement, may affect the accuracy of heart rate readings. The pulse sensors are intended only as exercise aids in determining heart rate trends in general.
- Do not attempt to use your equipment for any purpose other than for the purpose it is intended.
- Wear proper shoes. High heels, dress shoes, sandals or bare feet are not suitable for use on your equipment. Quality athletic shoes are recommended to avoid leg fatigue.
- Weight Limit: 300 lbs

Failure to follow all guidelines may compromise the effectiveness of the exercise experience, expose yourself (and possibly others) to injury, and reduce the longevity of the equipment.

SAVE THESE INSTRUCTIONS - THINK SAFETY!

CAUTION!! Please be careful when unpacking the carton.

Before you begin

Thank you for selecting our revolutionary XTERRA ERG220 Fitness Rower. A rower is an effective exercise for increasing cardiovascular fitness, building endurance, and toning the body. Our fitness rower provides an impressive selection of features designed to make your workouts at home more effective and enjoyable.

For your benefit, read this manual carefully before you use the ERG220 Fitness Rower. To help us assist you, note the product model number and serial number before contacting us. Before reading further, please familiarize yourself with the parts that are labeled in the drawing below.

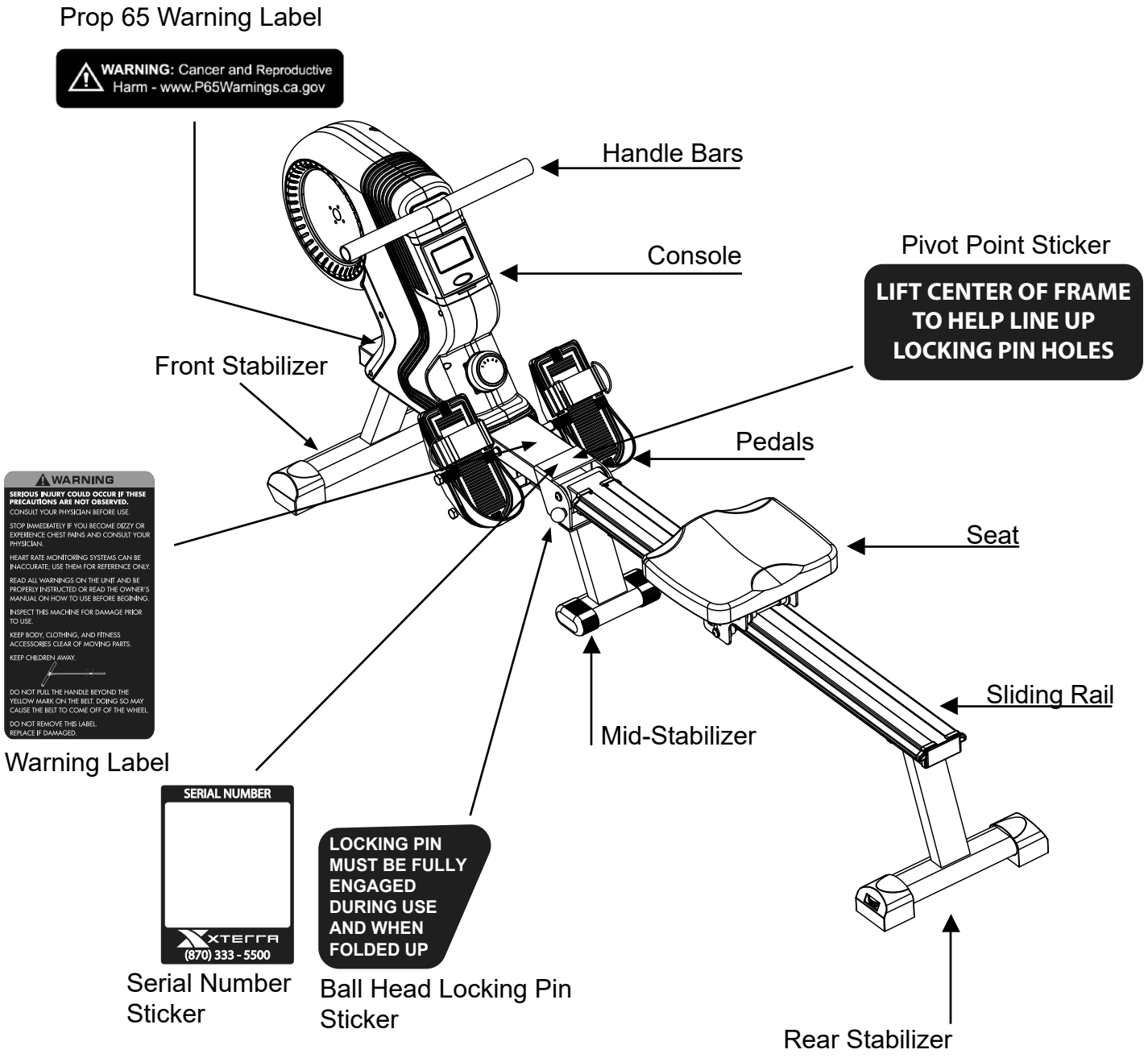

ERG220 Assembly Pack Checklist

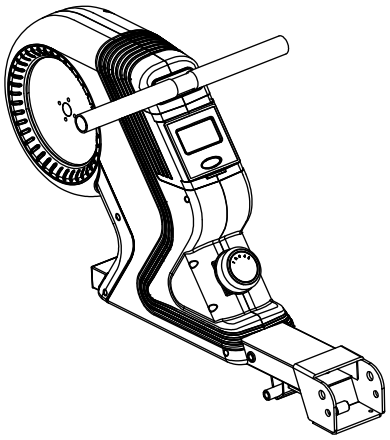

NO.1

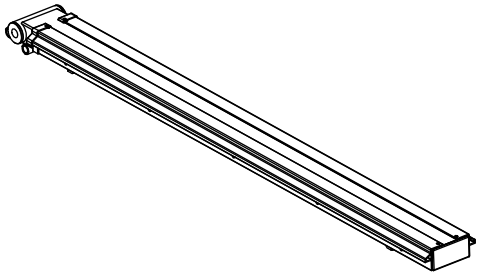

NO.2

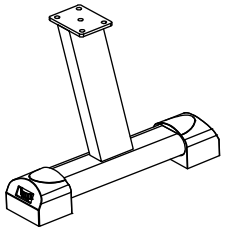

NO.4

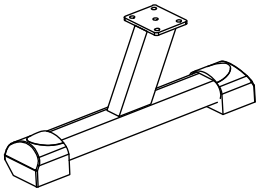

NO.3

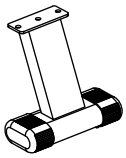

NO.7

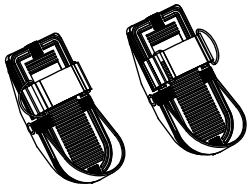

NO.12

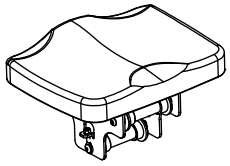

NO.38

Part No.	Description	Quantity
1	Main Frame	1
2	Slide Rail	1
3	Front Stabilizer	1
4	Rear Stabilizer	1
7	Middle Support	1
12	Pedals	2
38	Seat Assembly	1
	Hardware Bag	1
	Manual	1

Note: Above parts are all needed to assemble this machine. Before you start to assemble, please check the hardware packing to make sure they are included.

ERG220 Assembly Pack Checklist

RE-6030

STEP-1

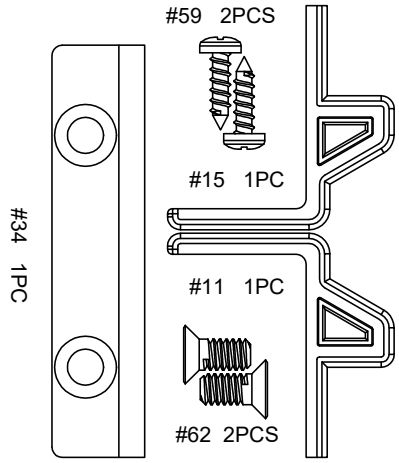

STEP-2

#55 OD16*ID8.5*1.5 4PCS

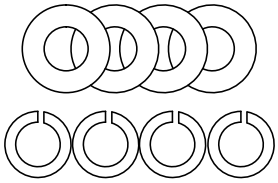

#52 ID8.5 4PCS
#81 M8*20 4PCS

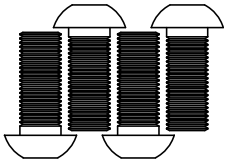

STEP-3

#55 OD16*ID8.5*1.5 4PCS

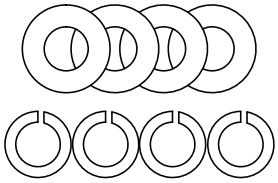

#52 ID8.5 4PCS
#81 M8*20 4PCS

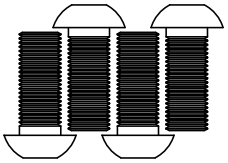

STEP-4

#55 OD16*ID8.5*1.5 2PCS

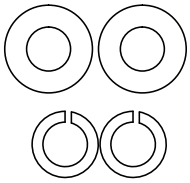

#52 ID8.5 2PCS
#81 M8*20 2PCS

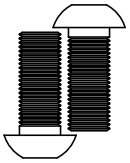

STEP-5

#46 ∅16*110 1PC #81 M8*20 2PCS #44 OD20*ID8.5*1.5 2PCS

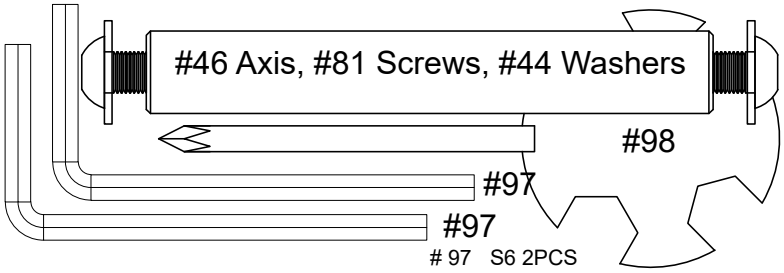

97 S6 2PCS
98 S13-14-19 1PC

TOOL



#65 ∅12 1PC

STEP-6

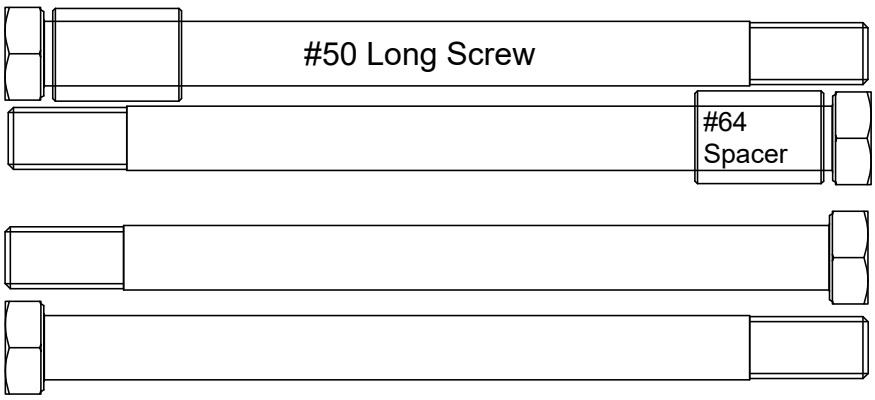

#50 M12*160 4pcs #64 ∅16*∅13*26 2PCS

ERG220 Assembly Instructions

1 Seat Assembly

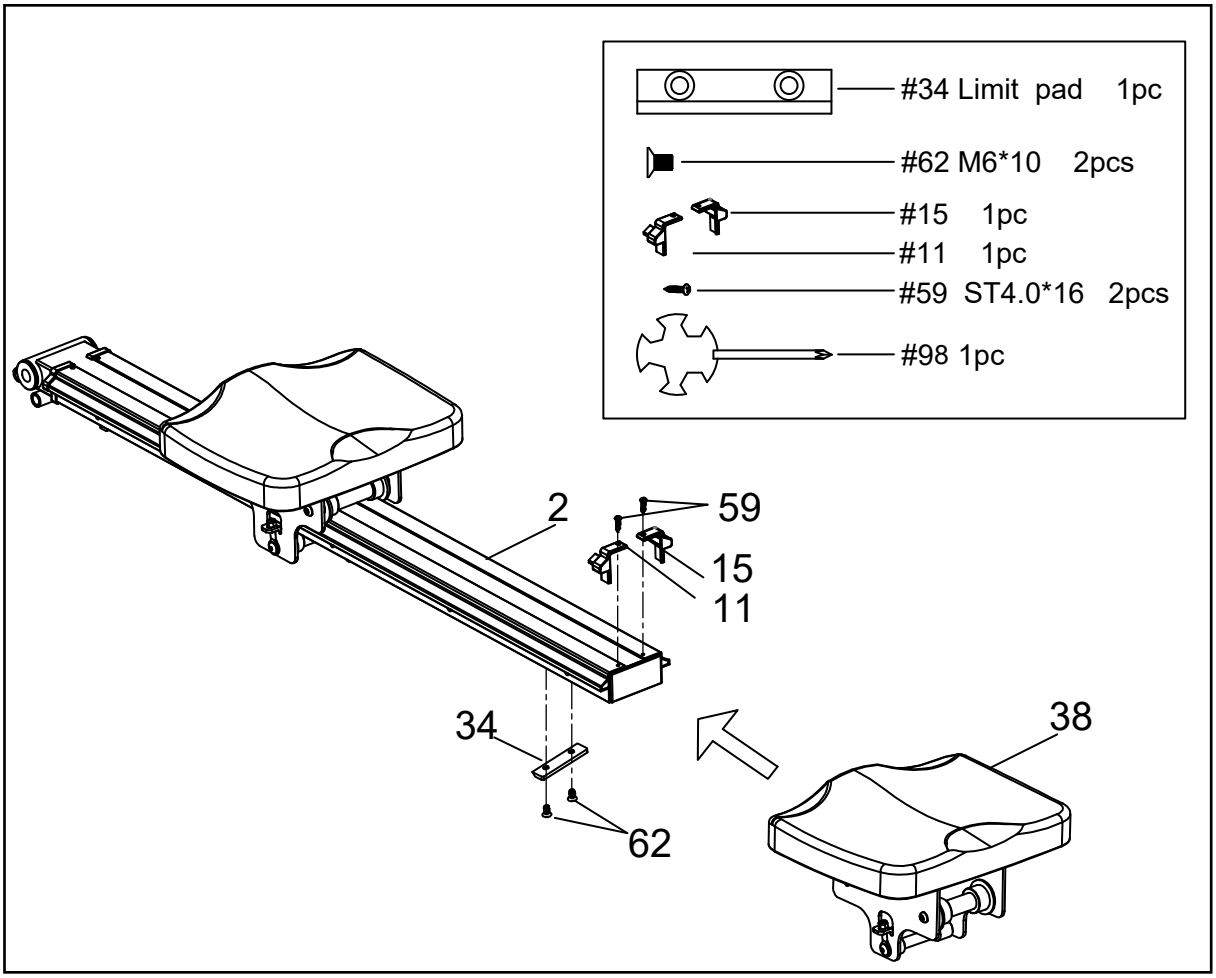

1. Slide the **Seat Assembly (38)** onto the **Seat Rail (2)**. Make sure that the seat faces the hinge.
2. Use 2 **M6 x 10 Button Head Screws (62)** to secure the **Limit Pad (34)** to the **Slide Rail (2)**.
3. Secure the **Stop Brackets (11, 15)** to the **Seat Rail (2)** using 2 **ST4.0 x 16 Screws (59)** to prevent the seat from sliding off the rail.

2 Rear Stabilizer

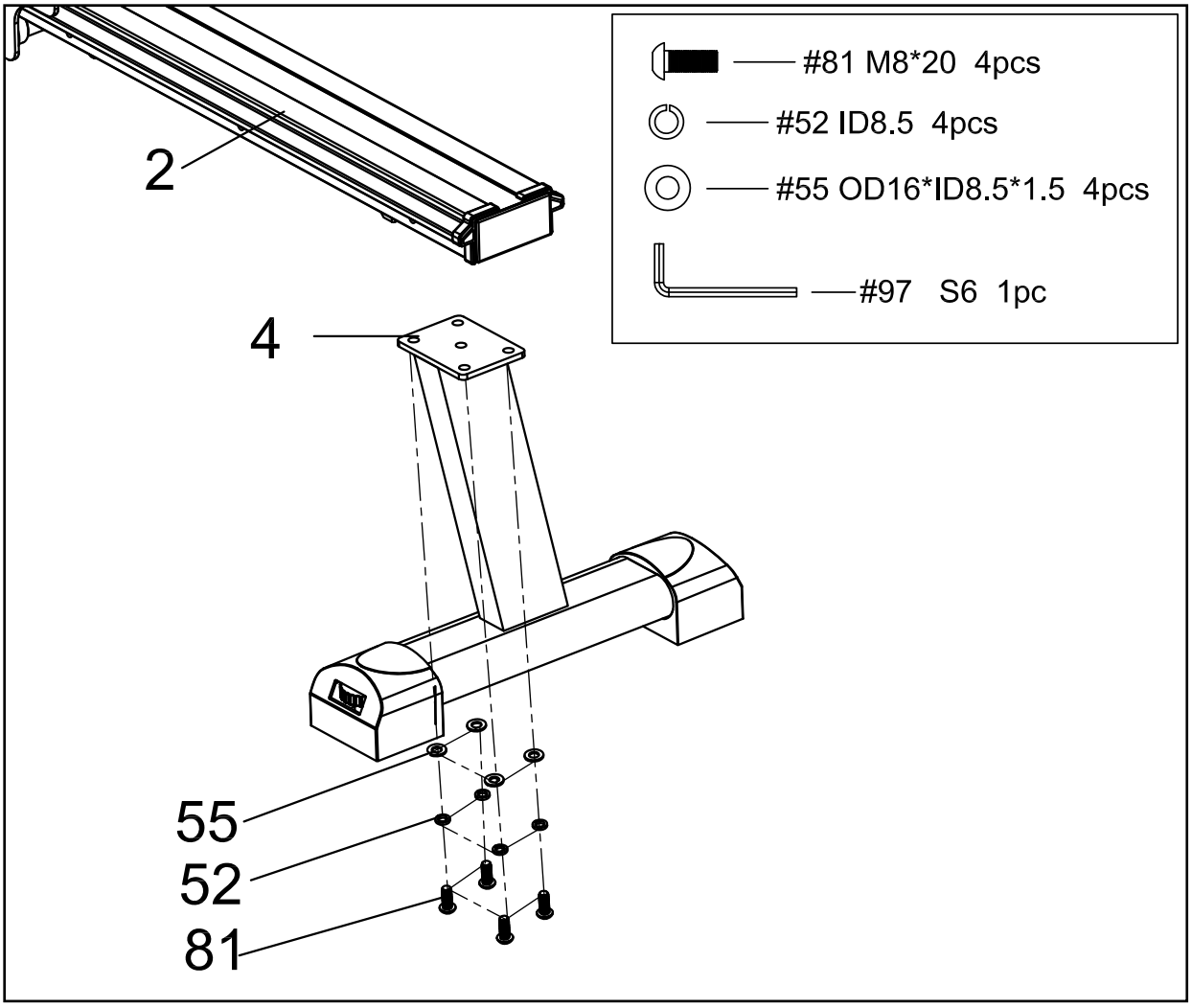

1. Attach the **Rear Stabilizer (4)** to the **Slide Rail (2)**. Secure using 4 **Screws (81)**, 4 **Spring Washers (52)** and 4 **Washers (55)** with the provided **Allen Wrench (97).**

ERG220 Assembly Instructions

3 - 1 Packaging Removal

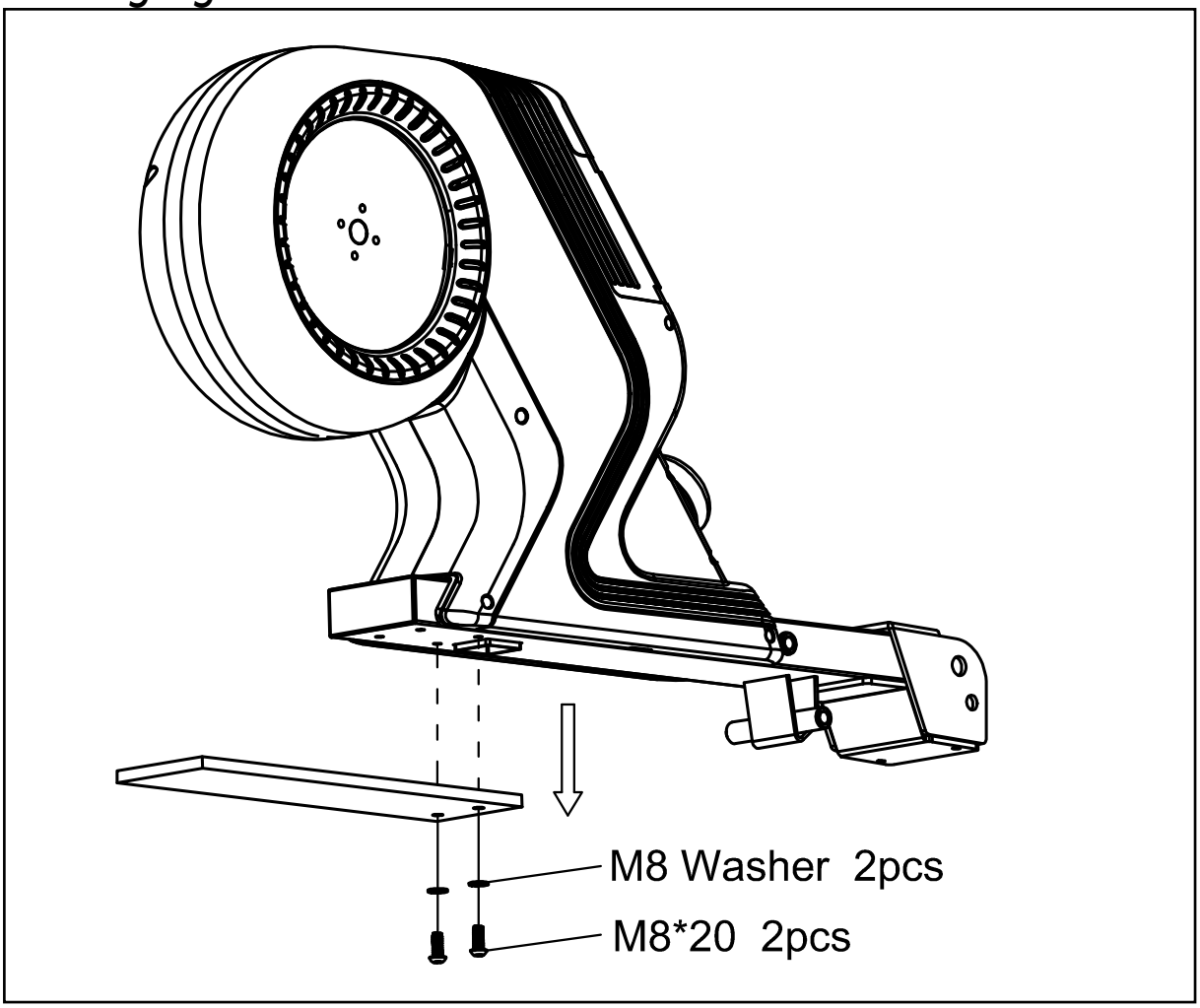

1. A piece of plywood has been attached to the **Main Frame (1)** to stabilize it during shipping.
2. Remove the 2 **Bolts** and 2 **Washers** using the **Allen Wrench (97)**.
3. The plywood, bolts, and washers are not needed in further assembly and can be recycled.

ERG220 Assembly Instructions

3 - 2 Front Stabilizer

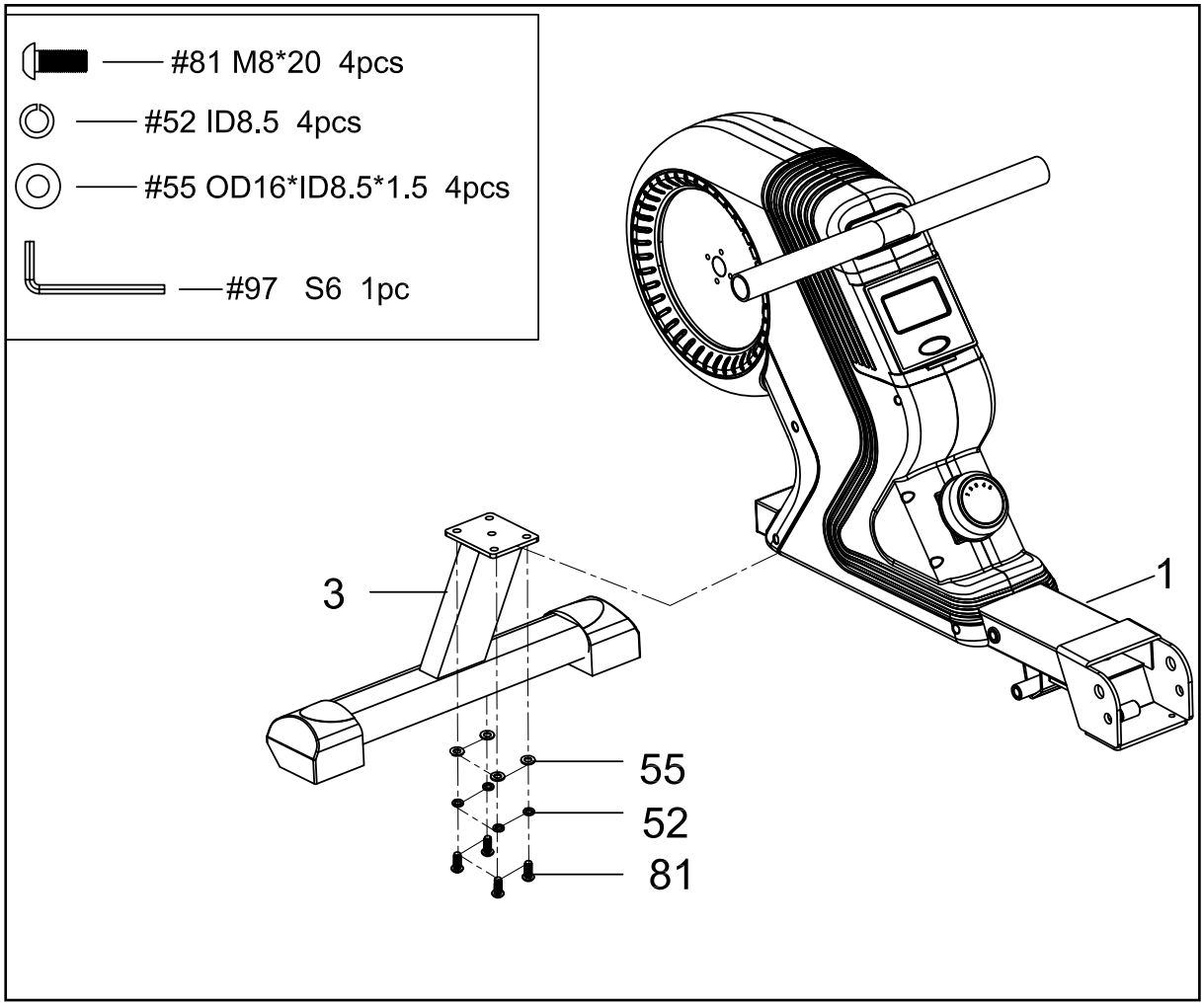

1. Attach the **Front Stabilizer (3)** to the **Main Frame (1)**. Secure using 4 **Screws (81)**, 4 **Spring Washers (52)** and 4 **Washers (55)** with the provided **Allen Wrench (97).**

4 Middle Support

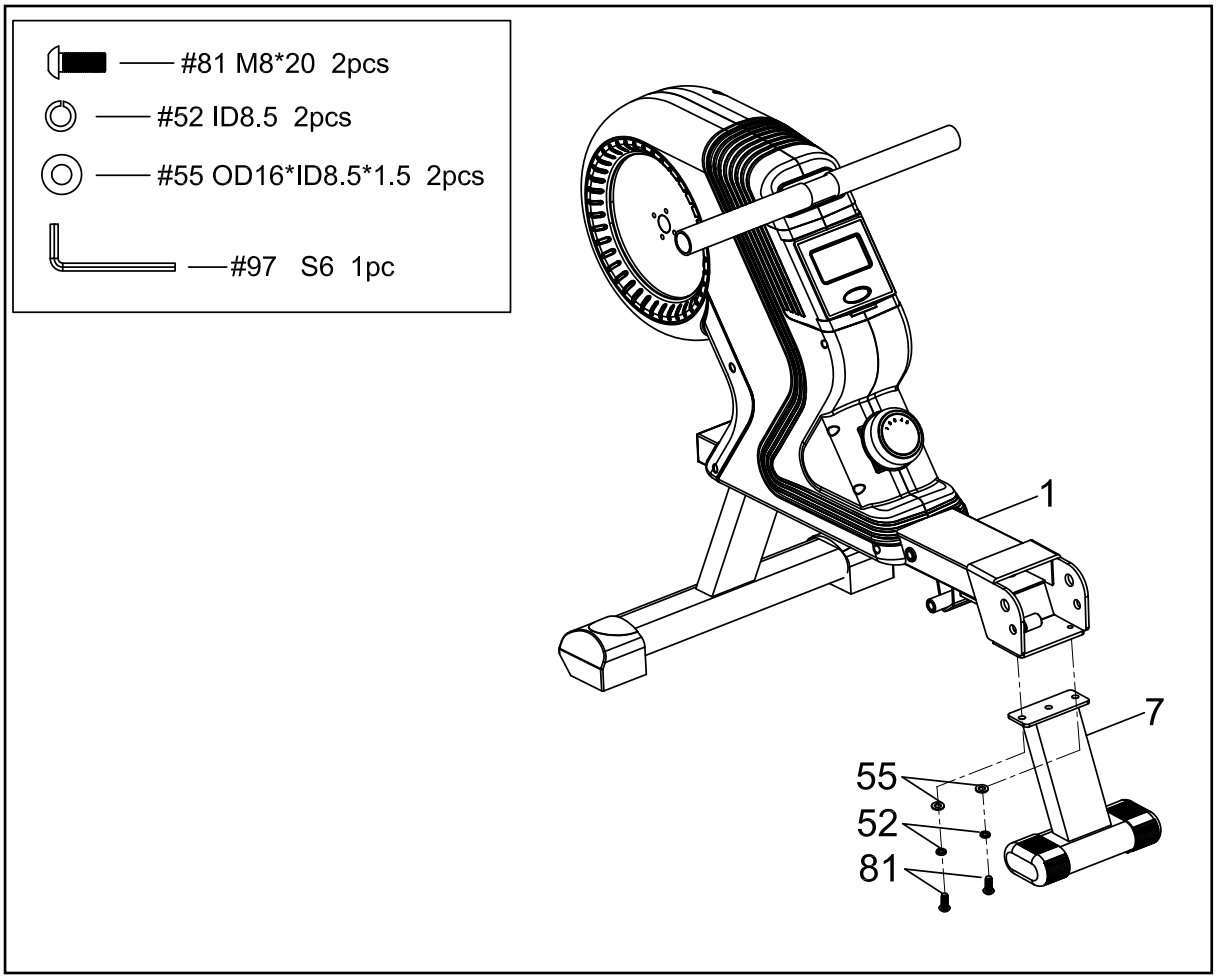

1. Attach the **Middle Support (7)** to the **Main Frame (1)**. Secure using 2 **Screws (81)**, 2 **Spring Washers (52)** and 2 **Washers (55)** with the provided **Allen Wrench (97).**

5 Connecting the Main Frame to the Slide Rail

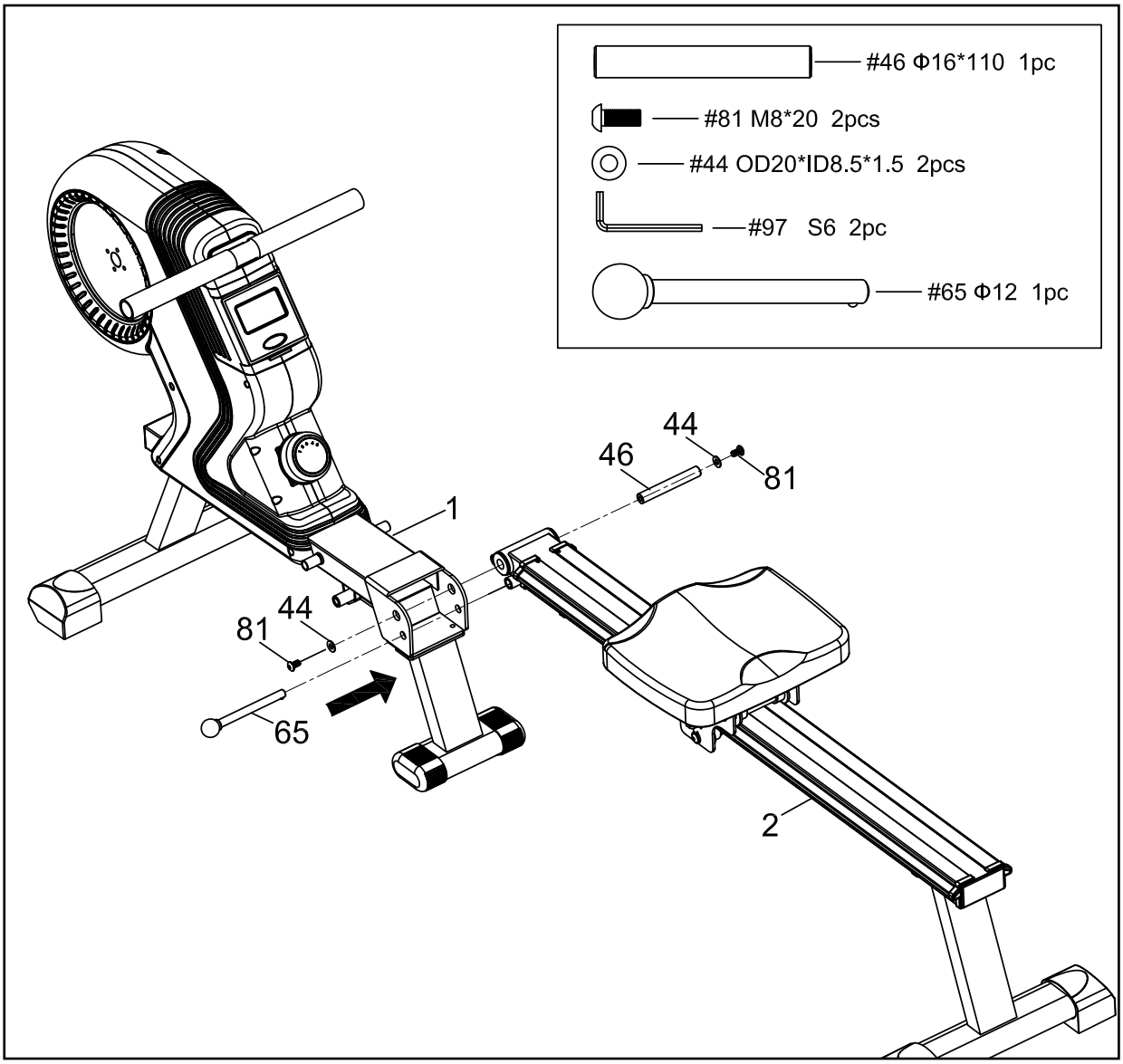

1. Attach the **Slide Rail (2)** to the **Main Frame (1)**. Insert the **Axis (46)** and secure using 2 **Screws (81)** and 2 **Washers (44)** with the provided **Allen Wrench (97).**
2. Insert the **Ball Head Pin (65)** into the lower slot on the **Main Frame (1) & Slide Rail (2)**. Lift center of frame to help line up locking pin holes. This locks the rower in the unfolded position and can be removed to fold the rower up.

6 Attaching the Pedals

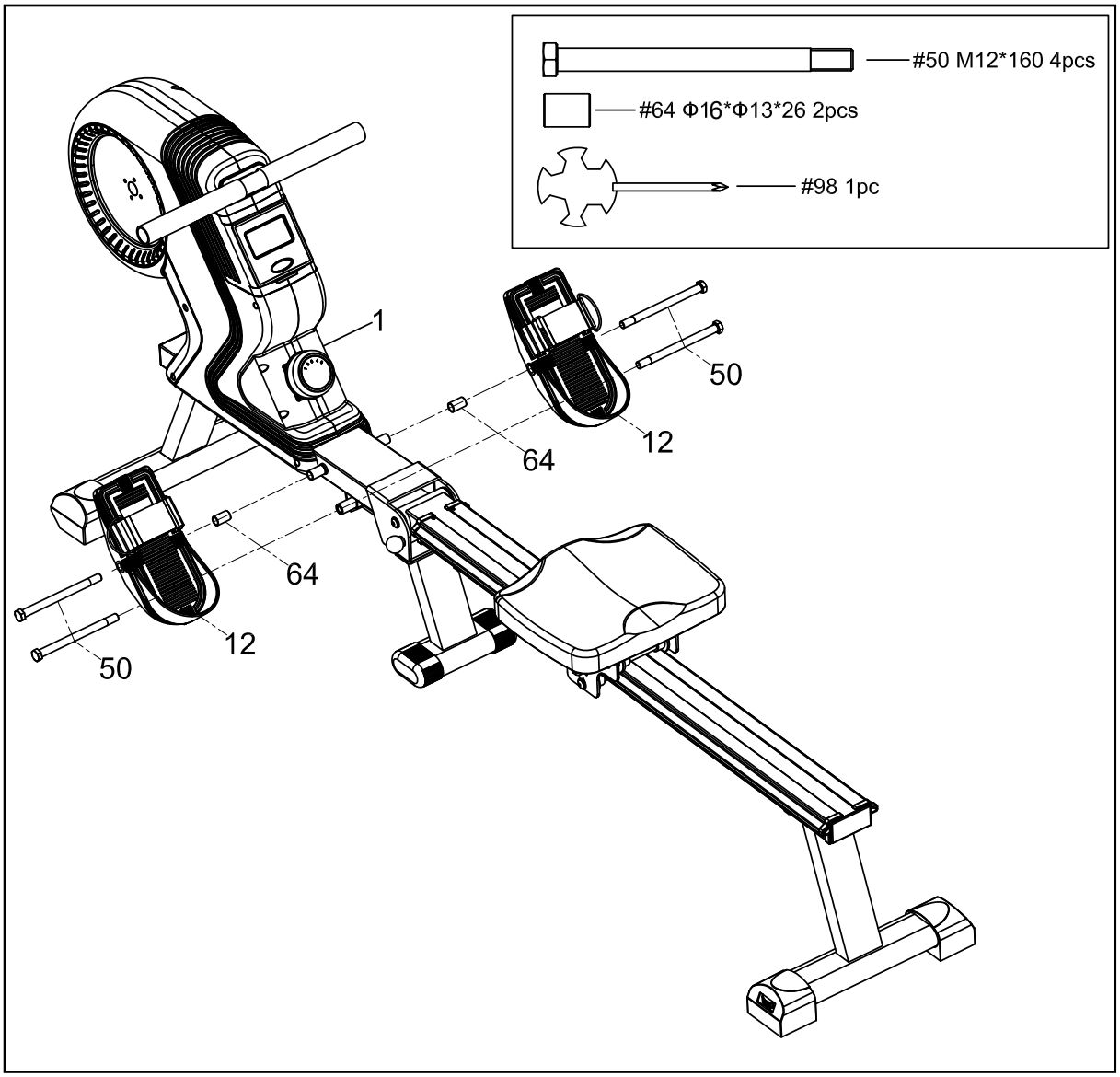

1. Slide the **Long Screw (50)** through the **Pedal (12)**, then through a **Spacer Sleeve (64)** before attaching and securing to the **Main Frame (1)** using the **Screw Driver (98)**. A second **Long Screw (50)** is directly secured onto the **Main Frame (1)** in the lower half of the **Pedal (12)**.
2. Repeat for the other **Pedal (12)**.

7 Console Connection

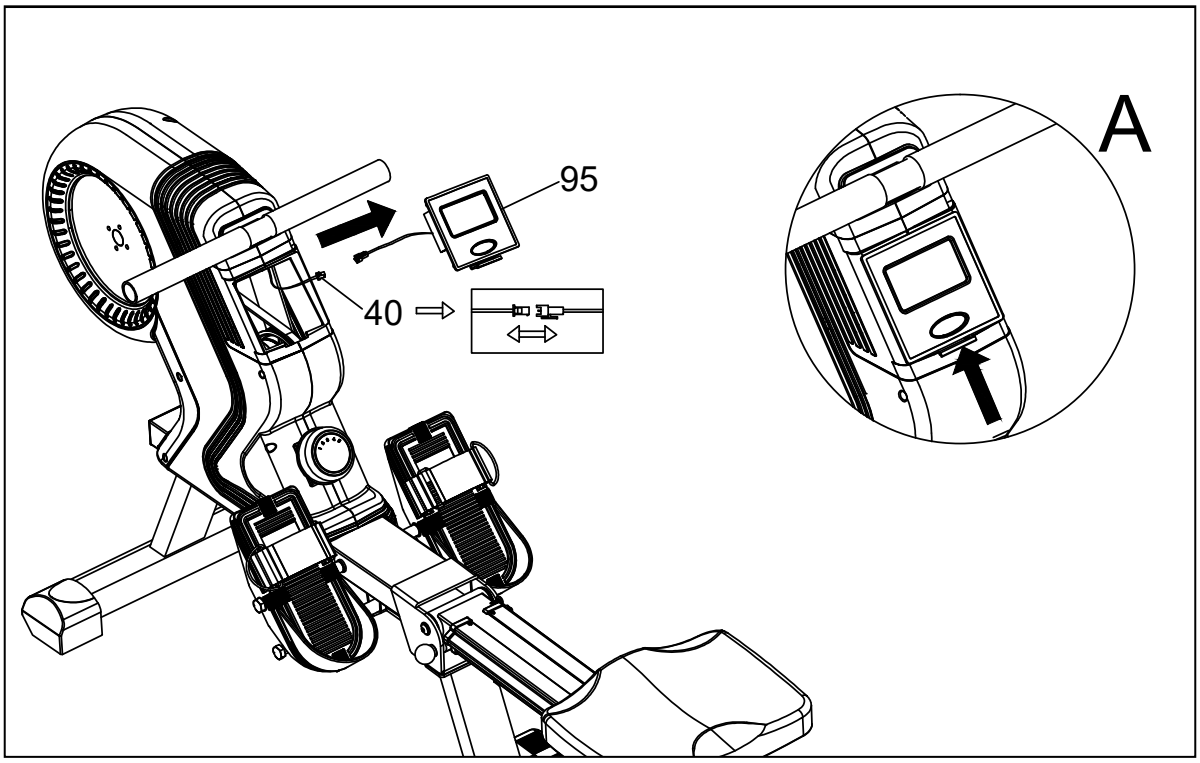

1. To insert / remove batteries, the **Console (95)** can be removed from the **Main Frame (1)**.
2. Pop the **Console (95)** out via the hinge (shown above) and be careful to not damage the connection wires. Unclip the wires and the **Console (95)** can be moved around freely. Insert the 2 AA batteries to activate the **Console (95)**.

Adjustment Guides

Pedal Adjustment

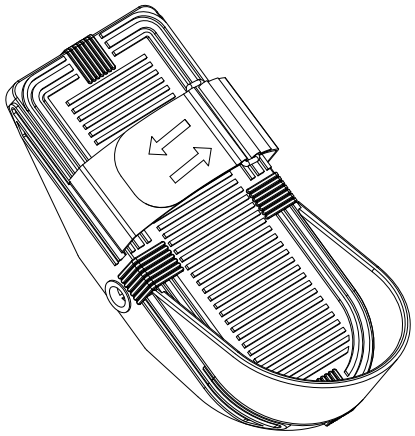

To adjust the pedal strap, remove the Velcro end of the strap from the mesh side by pulling it upward then to the left.

Once removed, you may increase the opening of the pedal strap by pulling the mesh end up and to the right.

To tighten, pull the Velcro end of the pedal strap upward then to the right and down to secure it to the mesh side of the strap.

Moving the Machine

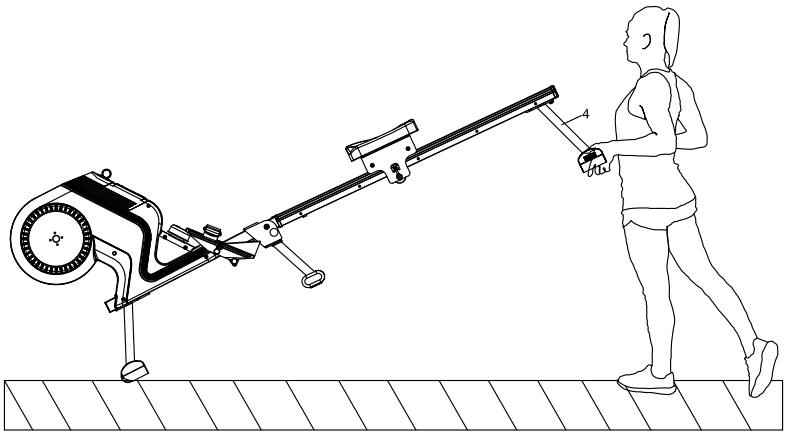

To move the machine, lift up the rear stabilizer until the transportation wheels on the front stand touch the ground.

With the wheels on the ground, you can transport the rower to the desired location with ease.

Adjusting the Balance

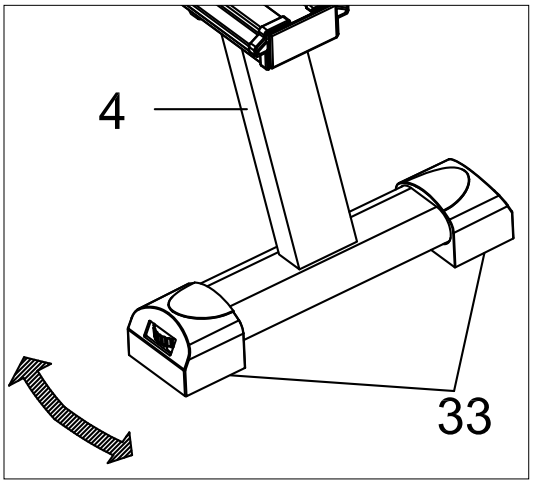

Levers are found on the **Rear Stabilizer (4)** of the machine. If you find the machine is unbalanced before or during your workout, the **Levelers (33)** can be used to correct this issue. Continuously working out on an unbalanced machine may cause damage to the machine.

Folding the Rower

When not in use, the rower can be folded to save space. You can fold the rower by locating the **Ball Head Pin (65)** on the **Slide Rail (2)** and removing it. Then, take the **Slide Rail (2)** and move it into a vertical position.

CAUTION: The **Seat (38)** will glide down when the **Slide Rail (2)** is raised.

Also take care to avoid the **Rear Stabilizer (4)** when moving the **Slide Rail (2)**.

Once the **Slide Rail (2)** is in the vertical position, re-insert the **Ball Head Pin (65)** into its slot on the **Slide Rail (2)**. This locks the rower into the folded position.

CAUTION: The **Slide Rail (2)** will not stay in the vertical position before the **Ball Head Pin (65)** is inserted. Make sure to not let go of it before it is secured or the **Slide Rail (2)** may fall.

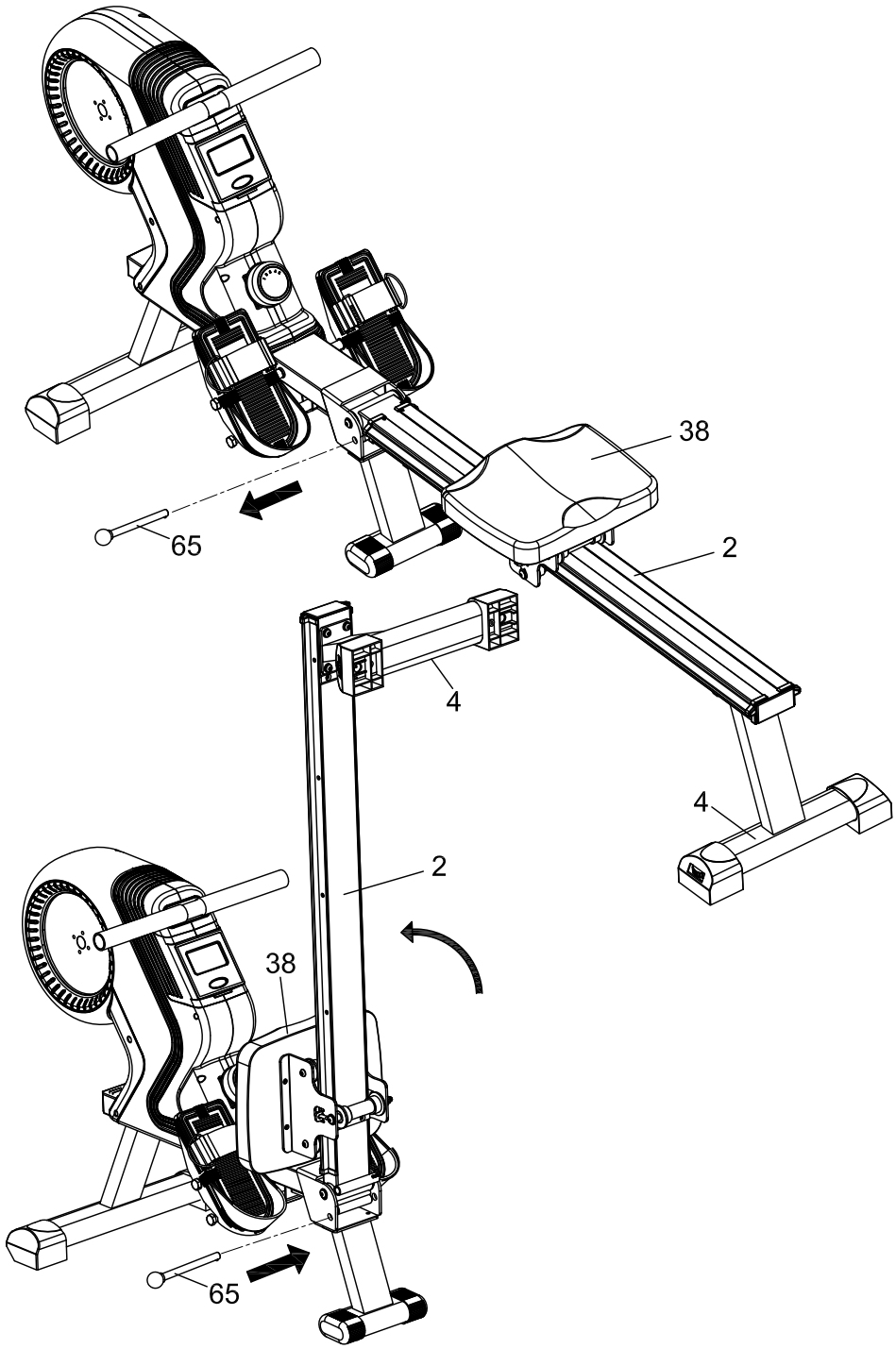

Operation of Your Console

ERG220 Console

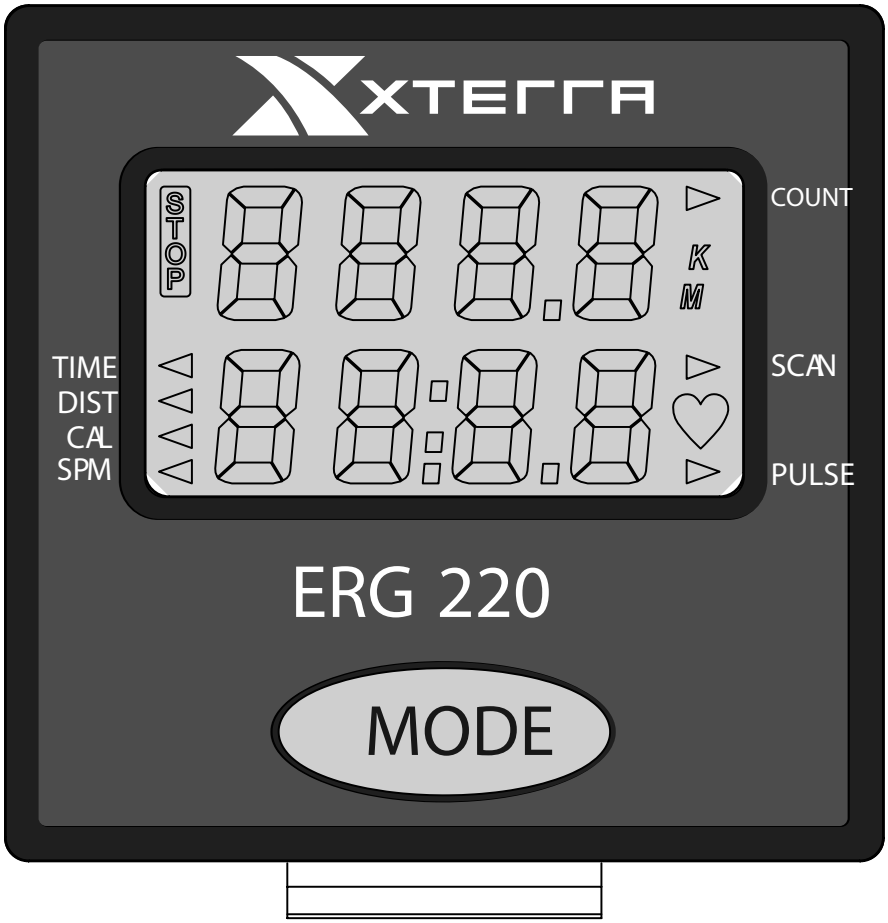

Functions and Operations

Batteries Installation

Please install 2 AA batteries in the battery case on the back of the **Console (95)**.
(Whenever batteries are removed, all values will be reset to zero.)

Auto On/Off

Whenever a user starts to do exercise, the display will light up and show the workout values automatically. After 4.5 minutes of no exercise input, the display will shut off. When a user begins to exercise again the workout values will continue to from where they left off.
(Holding the **MODE** button for 2 seconds will cause all the values, except odometer, to reset to zero.)

Auto Scan

After the **Console (95)** is powered on or when the Mode button is pressed, the display will cycle through all functions values “Time - Distance - Calories - SPM - Pulse”. Each value will be held for 6 seconds.

Distance
Displays the distance from 0 to 9999 meters. In “Autoscan” mode, the value will hold for 6 seconds before continuing to the next value, users also can press the **MODE** button to cycle through the other values until the ARROW icon ◄ points to display the distance value. This will end “Autoscan” mode and only the selected value will display continuously.

Time
Displays the workout time from 00:00 to 99:59. Users can press the **MODE** button to cycle through the other values until an ARROW icon ◄ points to “Time” to display the workout time value.

Count
Displays the step from 0 to 9999. Users also can press the Mode button to cycle through the other values until an ARROW icon ► points to “Count”.

Calories
Displays the calories burned during training from 0.0 to 9999. Users also can press the **MODE** button to cycle through other values until an ARROW icon ◄ points the calories.

SPM
Displays current Strokes Per Minute from 0 to 120. Users also can press the **MODE** button to cycle through the other values until an ARROW icon ◄ points to display “SPM”.

Pulse
Displays the current heart rate in beats per minute. Users also can press the **MODE** button to cycle through other values until an ARROW icon ► points to display “Pulse”.

Reset
Hold the button for 2 seconds. All the function values, except odometer, will be reset to zero.

Note:
If the console displays abnormally, please re-install the batteries and try again. Please properly dispose of your batteries after use.

Troubleshooting

Problem	Cause	Solution
Console does not turn on	Battery not Installed	Install Battery
	Computer Wires not connected	Ensure the computer wires are connected properly at the upright and computer
Console does not display speed or distance	Sensor wire not connected	Ensure the computer wires are connected properly at the upright and the computer
	Sensor wire not working properly	Replace sensor wire
	Monitor not working properly	Replace monitor
No tension	Magnetic wheel not working properly	Replace magnetic wheel
	Computer wires not connected properly	Ensure the computer wires are connected properly at the upright and the computer
	Tension needs adjustment	Turn tension adjustment knob accordingly
Grinding noise	Idler pulley defective	Replace idler pulley
	Flywheel defective	Replace flywheel
Squeaking or squealing noise	V-belt slipping	Adjust v-belt

Manufacturer's Limited Warranty

Effective March 15th, 2023 - ROWER LIMITED WARRANTY

XTERRA Fitness Inc. warrants all its home use Rower parts for a period of time listed below, from the date of retail sale, as determined by a sales receipt or in the absence of a sales receipt, eighteen (18) months from the original factory shipping date. XTERRA Fitness' responsibilities include providing new or remanufactured parts, at XTERRA Fitness' option, and technical support to our independent dealers and servicing organizations. In the absence of a dealer or service organization, these warranties will be administered by XTERRA Fitness directly to a consumer. The warranty period applies to the following components:

Home Use Limited Warranty		
Frame	Parts	Labor
1 Year	1 Year	None

NORMAL RESPONSIBILITIES OF THE CONSUMER

This warranty applies only to products in ordinary household use. The consumer is responsible for the items listed below:

1. The warranty registration card must be completed and returned to the address listed on the card within 10 days of the original purchase to validate the manufacturer's limited warranty or register online at the XTERRA Fitness website.
2. Proper use of the Rower in accordance with the instructions provided in this manual, including maintenance.
3. Proper connection to a power supply of sufficient voltage, replacement of blown fuses, repair of loose connections or defects in house/facility wiring.
4. Expenses for making the Rower accessible for servicing, including any item that was not part of the Rower at the time it was shipped from the factory.
5. Damages to the Rower finish during shipping, installation or following installation.

EXCLUSIONS

This warranty does not cover the following:

1. CONSEQUENTIAL, COLLATERAL, OR INCIDENTAL DAMAGES SUCH AS PROPERTY DAMAGE AND INCIDENTAL EXPENSES RESULTING FROM ANY BREACH OF THIS WRITTEN OR ANY IMPLIED WARRANTY. Note: Some states do not allow the exclusion or limitation of incidental or consequential damages, so this limitation or exclusion may not apply to you.
2. Service call reimbursement to the consumer. Service call reimbursement to the dealer that does not involve malfunction or defects in workmanship or material, for units that are beyond the warranty period, for units that are beyond the service call reimbursement period, for Rowers not requiring component replacement, or Rowers not in ordinary household use.
3. Damages caused by services performed by persons other than authorized XTERRA Fitness service companies, use of parts other than original XTERRA Fitness parts, or external causes such as alterations, modifications, abuse, misuse, accident, improper maintenance, inadequate power supply, or acts of God.
4. Products with original serial numbers that have been removed or altered.
5. Products that have been; sold, transferred, bartered, or given to a third party.
6. Products that are used as store display models.
7. Products that do not have a warranty registration on file at XTERRA Fitness Inc. XTERRA Fitness reserves the right to request proof of purchase if no warranty record exists for the product.
8. Product use in any environment other than a residential setting.
9. THIS WARRANTY IS EXPRESSLY IN LIEU OF ALL OTHER WARRANTIES EXPRESSED OR IMPLIED, INCLUDING THE WARRANTIES OF MERCHANTABILITY AND/OR FITNESS FOR A PARTICULAR PURPOSE.

SERVICE

Keep your bill of sale. Twelve (12) months from the date on the bill of sale or eighteen (18) months from the date of factory shipping as determined by the serial number establishes the warranty period should service be required. If service is performed, it is in your best interest to obtain and keep all receipts. This written warranty gives you specific legal rights. You may also have other rights that vary from state to state. Service under this warranty must be obtained by following these steps, in order:

1. Contact your selling authorized XTERRA Fitness dealer. OR
2. Contact your local authorized XTERRA Fitness service organization.
3. If there is a question as to where to obtain service, contact our service department at (870)333-5500
4. XTERRA Fitness' obligation under this warranty is limited to repairing or replacing, at XTERRA Fitness' option, the product through one of our authorized service centers. All repairs must be preauthorized by XTERRA Fitness. If the product is shipped to a service center freight charges to and from the service center will be the customer's responsibility. For replacement parts shipped while the product is under warranty, the customer will be responsible for shipping and handling charges. For in-home service, the customer will be responsible for a trip charge. There will be an additional trip charge if the customer is located over 100 miles from the nearest service center.
5. The owner is responsible for adequate packaging upon return to XTERRA Fitness. XTERRA Fitness is not responsible for damages in shipping. Make all freight damage claims with the appropriate freight carrier. DO NOT SHIP ANY UNIT TO OUR FACTORY WITHOUT A RETURN AUTHORIZATION NUMBER. All units arriving without a return authorization number will be refused.
6. For any further information, or to contact our service department by mail, send your correspondence to:

XTERRA Fitness, Inc.
P.O. Box 2037
Jonesboro, AR 72402-2037

Product features or specifications as described or illustrated are subject to change without notice. All warranties are made by XTERRA Fitness, Inc. This warranty applies only in the 48 contiguous United States. NOTE: This does not include Alaska or Hawaii.

Notes

3000 Nestle Road Jonesboro, AR 72401 - Phone:870-333-5500 - Fax:870-935-7611

©2019 All RIghts Reserved.