XTERRA® FITNESS™

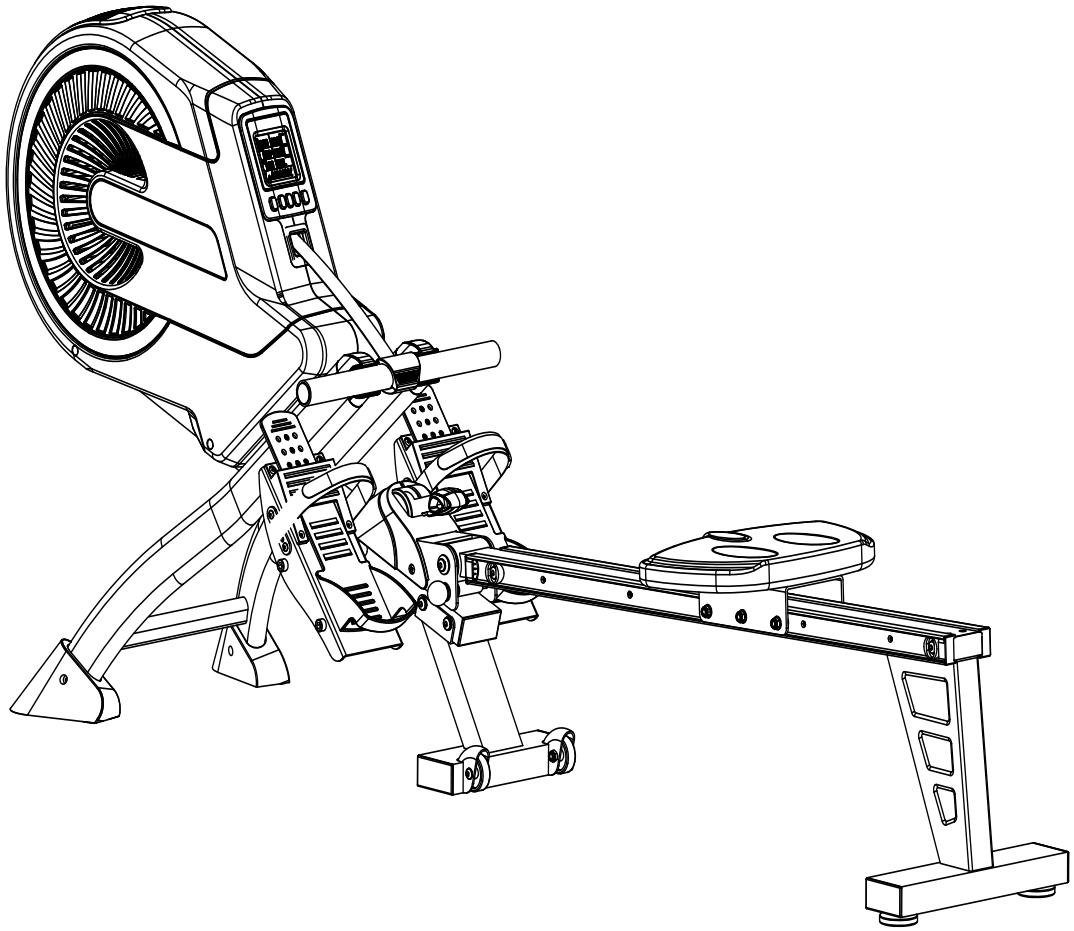

ERG**500** ROWER
OWNER'S MANUAL

PLEASE CAREFULLY READ THIS ENTIRE MANUAL BEFORE OPERATING YOUR NEW ROWER

Congratulations On Your New Rower and Welcome to the XTERRA Fitness Family!

Thank you for your purchase of this quality rower from **XTERRA Fitness**. Your new rower has been manufactured by one of the leading fitness manufacturers in the world. **XTERRA Fitness** will do all we can to make your ownership experience as pleasant as possible for many years to come. If you have questions, or if parts are missing or damaged, or you require customer service, call (870) 333-5500. Please have your model number and serial number handy when you call.

Please take a moment to record where you purchased your machine, as well as the date of purchase for future reference. We appreciate your confidence in **XTERRA Fitness** and we will always remember that you are the reason that we are in business. Please complete and mail your registration card today and enjoy your new rower.

Yours in Health,
XTERRA Fitness

Table Of Contents

Product Registration	**1**
Important Safety Instructions	**2**
ERG500 Assembly Instructions	**4**
Battery Replacement	**13**
Console Operation	**14**
Manufacturer’s Limited Warranty	**18**

Product Registration

Purchase Location _____

Purchase Date _____

Record Your Serial Number
Please record the Serial Number of this fitness product
in the space provided below.

Serial Number _____

Register Your Purchase
The self-addressed product registration card must be completed in full and returned to **XTERRA Fitness**. You can also go to ***www.xterrafitness.com/warrantyreg.html*** to register online.

ATTENTION

THIS ROWER IS INTENDED FOR **RESIDENTIAL USE ONLY** AND IS WARRANTED FOR THE APPLICATION. ANY OTHER APPLICATION **VOIDS** THIS WARRANTY IN ITS ENTIRETY.

Important Safety Instructions

When using an appliance, basic precautions should always be followed, including the following:

Read all instructions before using this appliance.

WARNING - To reduce the risk of burns, fire electric shock, or injury to persons:

1. Do not operate under blanket or pillow. Excessive heating can occur and cause fire, electric shock, or injury to persons.
2. This exercise equipment is not intended for use by persons with reduced physical, sensory or mental capabilities, or lack of experience and knowledge.
3. Keep children and pets away from the machine at all times. DO NOT leave children unattended in the same room with the machine.
4. Use this appliance only for its intended use as described in this manual. Do not use attachments not recommended by the manufacturer.
5. Never operate this appliance is not working properly, if it has been dropped or damaged, or dropped into water. Return the appliance to a service center for examination and repair.
6. Keep the appliance away from heated surfaces.
7. Never operate the appliance with the air openings blocked. Keep the air openings free of lint, hair, and the like.
8. Never drop or insert any object into any opening.
9. Do not use outdoors.
10. Do not operate where aerosol (spray) products are being use or where oxygen is being administered.
11. The appliance is intended for household use.



WARNING: This product can expose you to chemicals including Toluene and Acrylamide which are known to the State of California to cause cancer and birth defects or other reproductive harm.
For more information go to www.P65Warnings.ca.gov

Fitness Equipment Safety Instructions

- Do not operate equipment on deeply padded, plush or shag carpet. Damage to both carpet and equipment may result.
- Before beginning this or any exercise program, consult a physician. This is especially important for persons over the age of 35 or persons with pre-existing health conditions.
- Keep hands away from all moving parts.
- Do not attempt to use your equipment for any purpose other than for the purpose it is intended.
- Wear proper shoes. High heels, dress shoes, sandals or bare feet are not suitable for use on your equipment. Quality athletic shoes are recommended to avoid leg fatigue.
- Wear proper clothing for exercising, loose clothing could become caught in the machine.
- Only one person at a time should use the machine.
- If the user experiences dizziness, nausea, chest pain, or any other abnormal symptoms, STOP the workout at once. CONSULT A PHYSICIAN IMMEDIATELY.
- Do not place any sharp object around the machine.

Failure to follow all guidelines may compromise the effectiveness of the exercise experience, expose yourself (and possibly others) to injury, and reduce the longevity of the equipment.

SAVE THESE INSTRUCTIONS - THINK SAFETY!

CAUTION!! Please be careful when unpacking the carton.

Before you begin

Thank you for selecting our revolutionary XTERRA ERG500 Fitness Rower. A rower is an effective exercise for increasing cardiovascular fitness, building endurance, and toning the body. Our fitness rower provides an impressive selection of features designed to make your workouts at home more effective and enjoyable.

For your benefit, read this manual carefully before you use the ERG500 Fitness Rower. To help us assist you, note the product model number and serial number before contacting us. Before reading further, please familiarize yourself with the parts that are labeled in the drawing below.

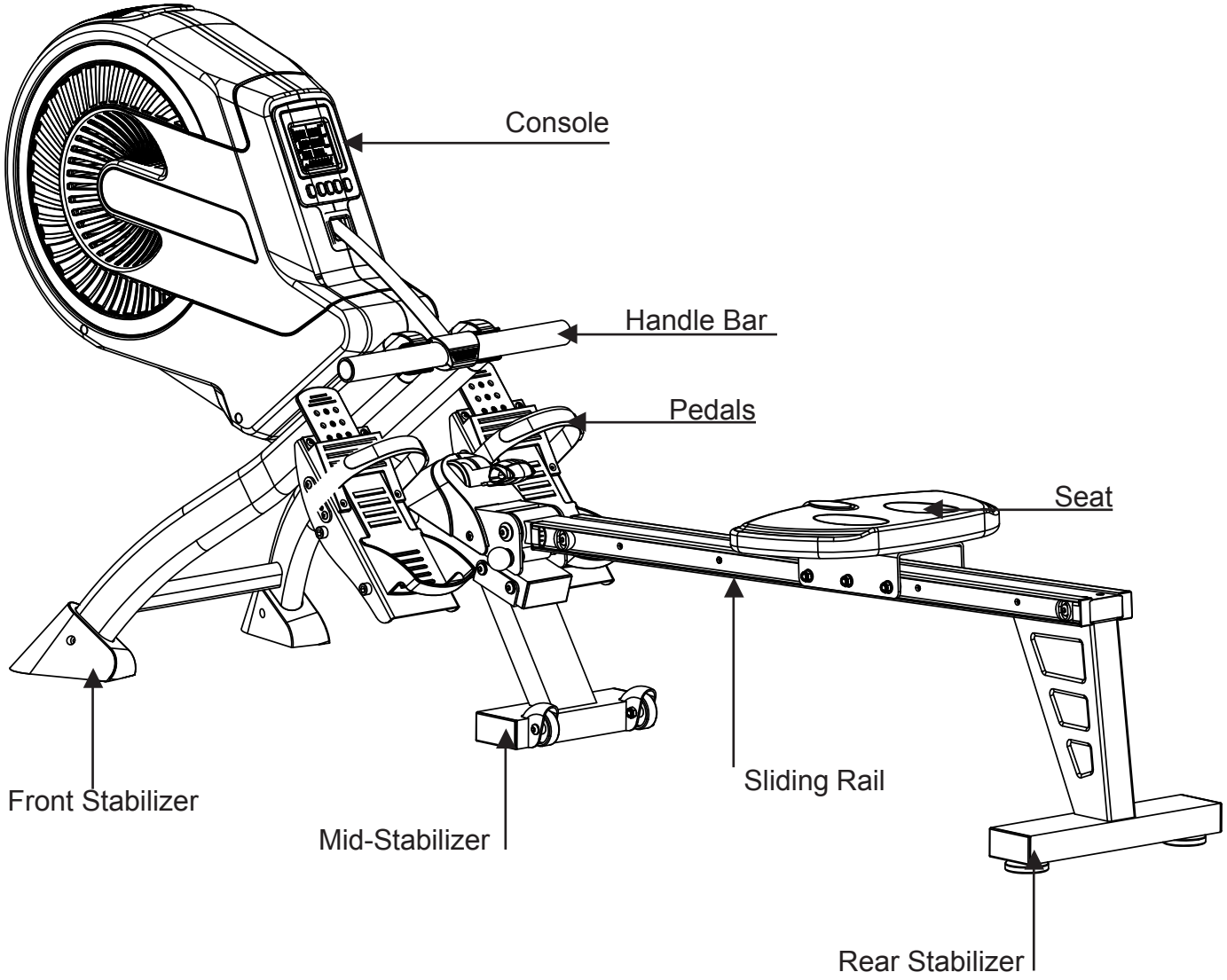

ERG**500** Assembly Part Checklist

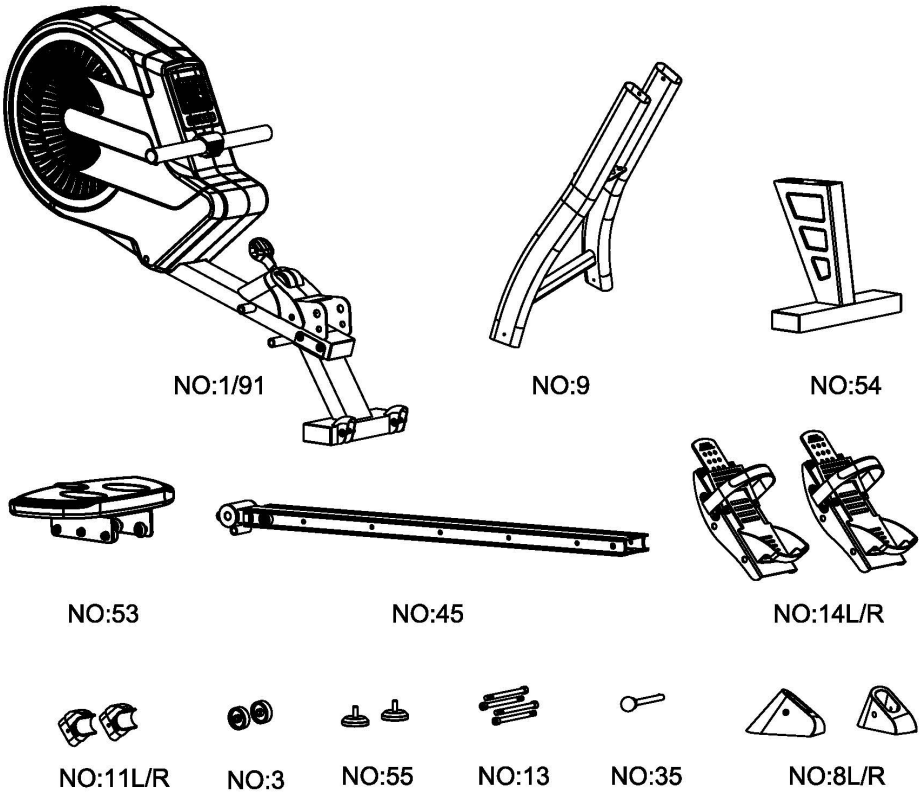

Part No.	Description	Q'TY
1/91	Main Frame/middle stabilizer	1
9	Front Support Tube	1
54	Rear Support Tube	1
53	Seat	1
45	Slide Rail	1
14L/R	Pedal	1/1
11L/R	Fixed Bracket for Handlebar	1/1
3	Roller	2
55	Foot Mat	2
13	Allen Bolt for Pedal	4
35	Ball Pin	1
8L/R	End Cap	1/1
	User Manual	1
	Hardware Pack	2

ERG**500** Assembly Pack Checklist

Part No	Description	Q'ty
19	Allen Bolt	5
34	Allen Bolt	4
36	Cushioned Rubber	2
37	Spring Washer	2
38	Flat Washer	2
40L	End Cap for Side Rail (L)	1
40R	End Cap for Side Rail (R)	1
41	Axle for Slide Rail	1
42	Allen Bolt	2
43	Flat Washer	3
92	Allen Key (6mm)	2
93	Wrench (13mm)	1

Note: Above parts are all needed to assemble this machine. Before you start to assemble, please check the hardware packing to make sure they are included.

ERG**500** Assembly Instructions

1 Middle Stabilizer Rollers

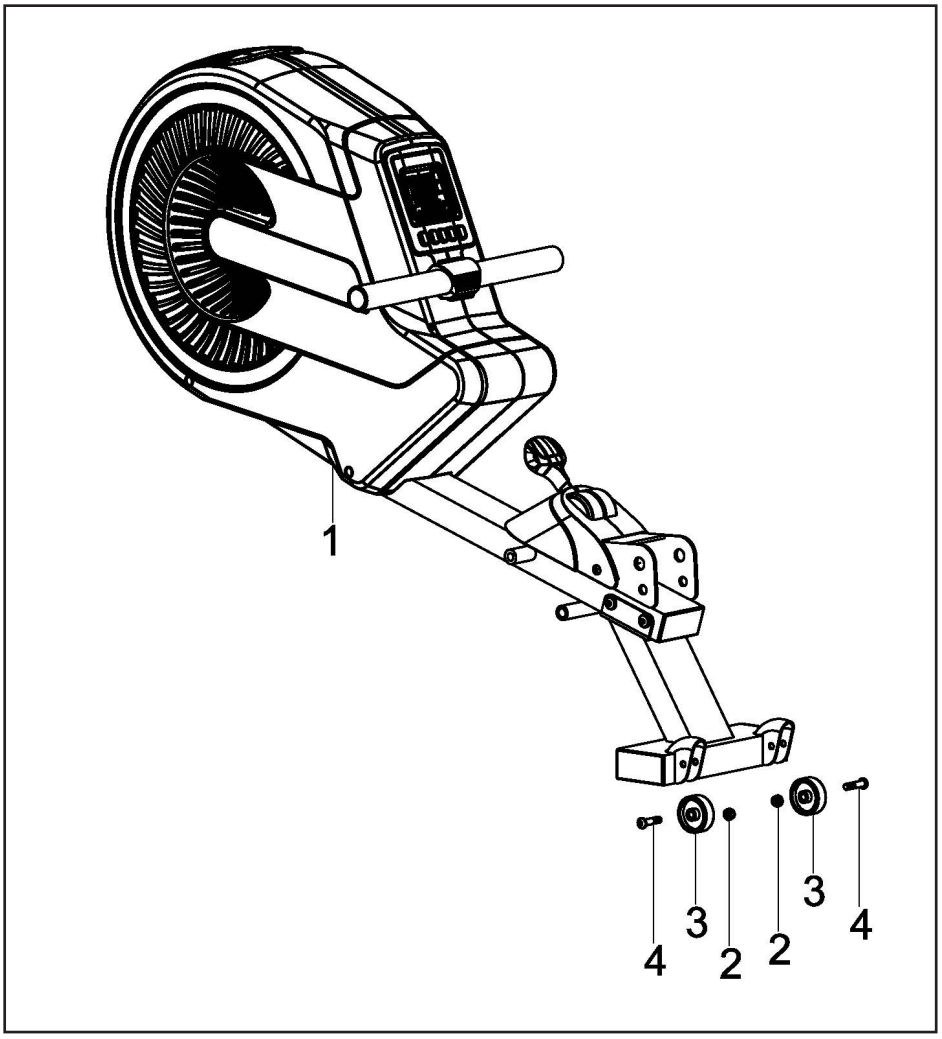

1. Attach the rollers (3) onto middle stabilizer, fasten with two sets of allen bolt (4) and nylon nut (2) which are pre-assembled on the middle stabilizer.

2 Attaching the Slide Rail

Hardware Step 2

2 Allen Bolts (#34)
2 Spring Washers (#37)
2 Flat Washers (#38)
1 Axle (#41)

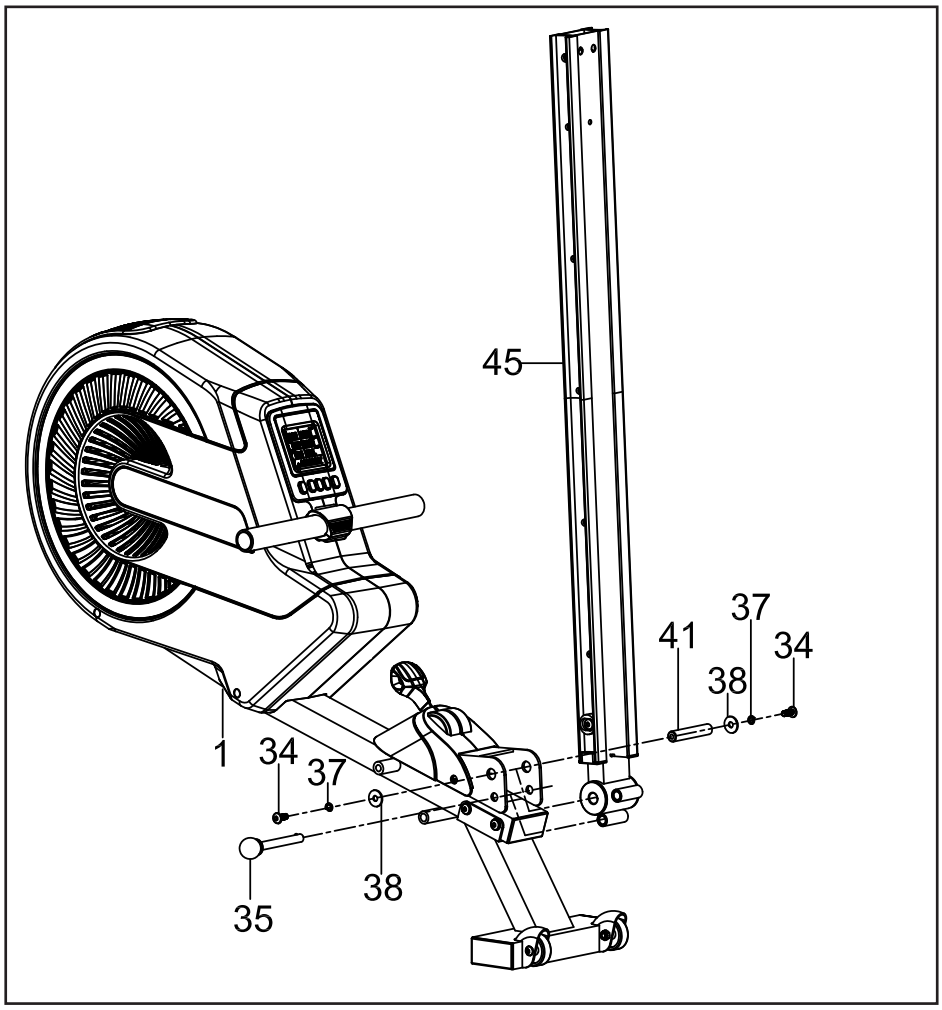

1. Pull out the ball pin (35) from the main frame (1).

2. Place the slide rail (45) onto the U shaped connection tube of the main frame (1), fasten with one axle for slide rail (41), two sets of allen bolts (34), spring washers (37) and flat washers (38).

3. Then insert the ball pin (35).

3 Attaching the Seat and Rear Stabilizer

Hardware Step 3

2 Cushioned Rubbers (#36)
2 Allen Bolts (#34)
1 Allen Bolt ((#19)
3 Flat Washers (#43)
2 Allen Bolts (#42)
2 End Caps (#40)

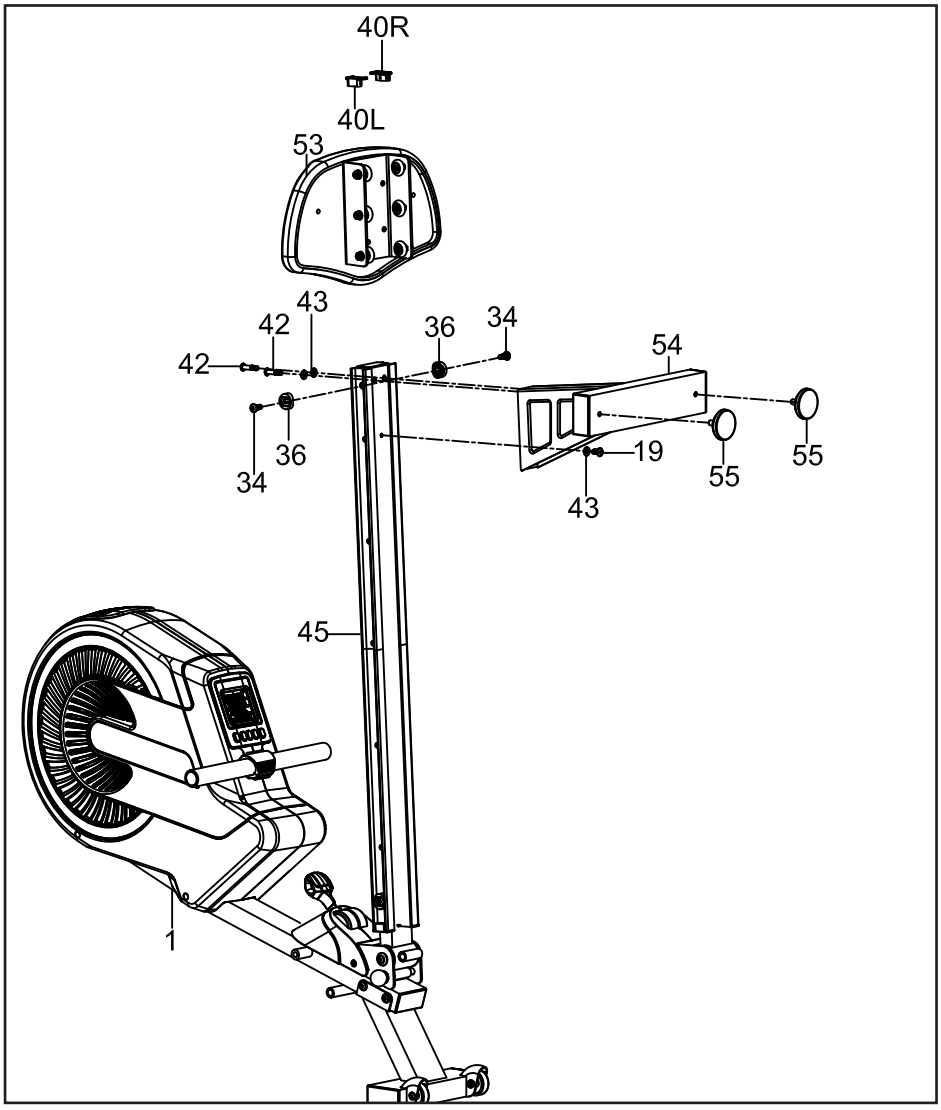

1. Insert the seat (53) to the slide rail (45).

2. Insert two cushion rubbers (36) to the slide rail (45), slightly fasten with two allen bolts (34).

3. Fasten two foot mats (55) on the rear support tube (54).

4. Attach the rear support tube (54) to the slide rail (45), fasten with one allen bolt (19), three flat washers (43) and two allen bolts (42).

5. Then insert two end caps for side rail (40L/R) to the end of slide rail (45).

4 Attaching the Front Stabilizer

Hardware Step 4

4 Allen Bolts (#19)

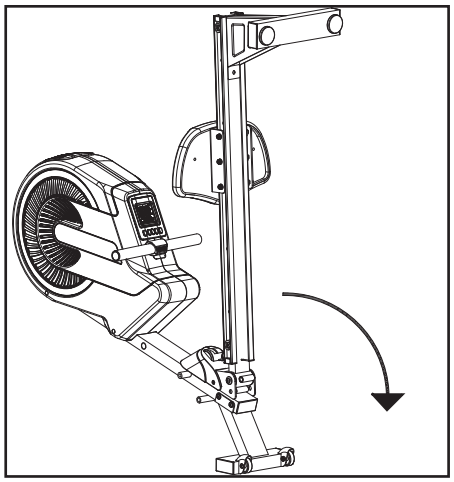

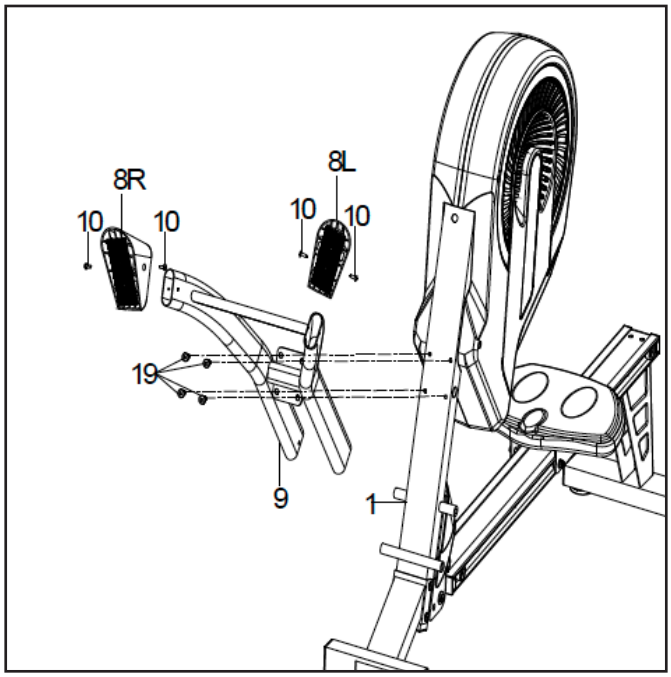

1. Turn over the main frame and place the rear support tube on the floor.

2. Take off four self-tapping screws (10) from the end caps for front stabilizer tube (8L/R) which are pre-assembled on the end caps, then attach the end caps to the front support tube (9) by four self-tapping screws (10).

3. Attach the front support tube (9) to the main frame (1), fasten with four allen bolts (19).

5 Using the Lock Ball Pin

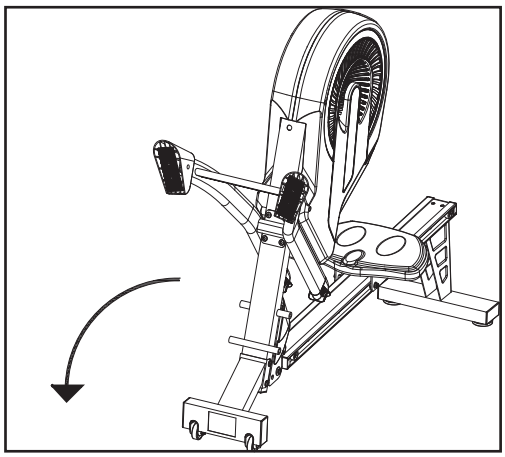

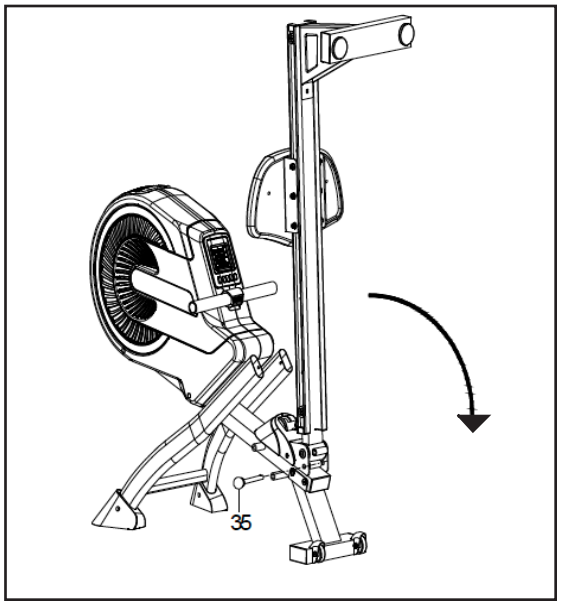

1. Turn over the main frame and place the front support tube on the floor.

2. Pull out the ball pin (35) from the main frame and unfold the main frame. Then insert the ball pin (35) to the main frame again for fixation.

Note: Before insert ball pin (35).
1. Slightly lift up the main frame.
2. Make sure the ball pin holes are lined up.
3. Insert ball pin (35) into holes.

6 Attaching the Pedals

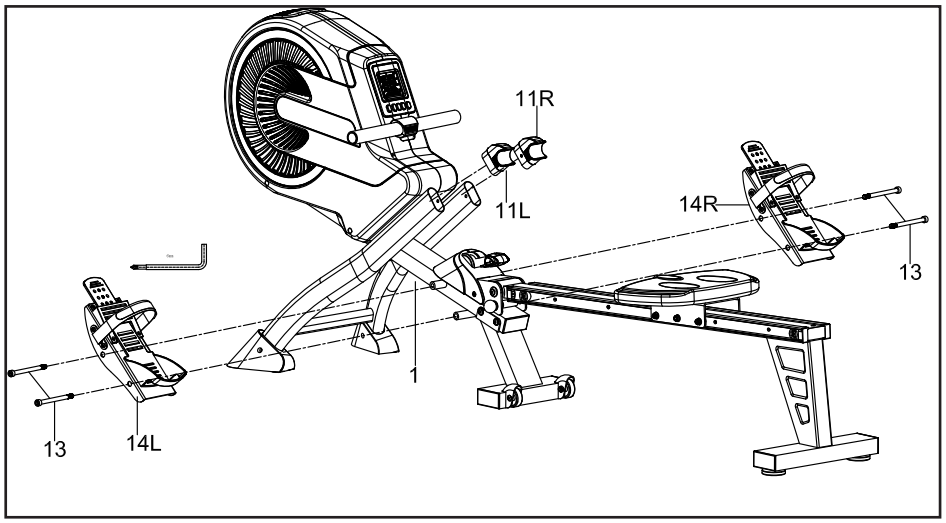

1. Insert two fixed brackets for handlebar (11L/R) into the holes on the front support tube of main frame (1).

2. Attach the left pedal (14L) to the left side of main frame (1), fasten with two allen bolts (13).

3. Repeat for the right pedal (14R) to the right side of main frame (1).

7 Attaching the Handlebar

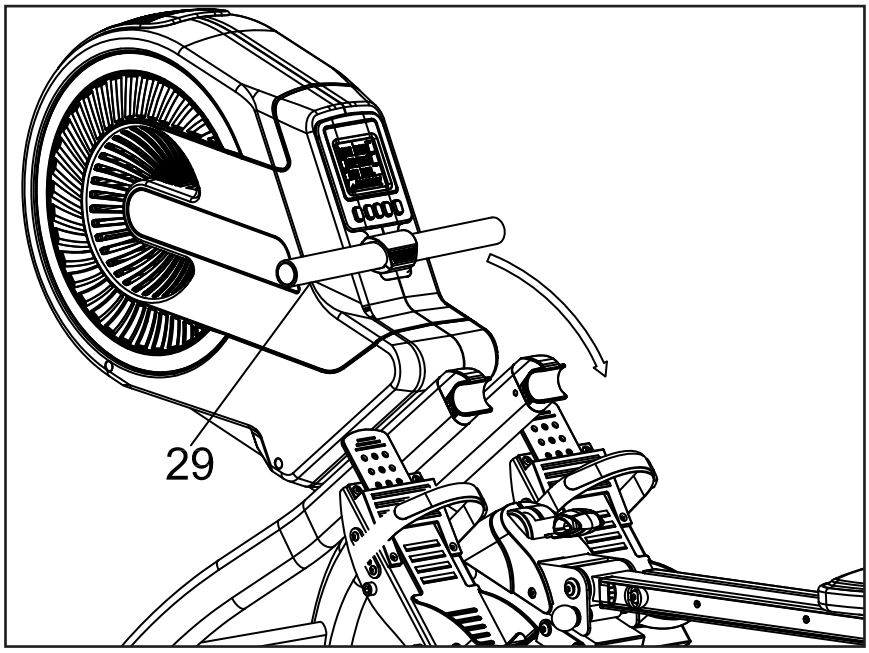

1. The handlebar (29) also can be placed into the handlebar holder.

8 Folding the Rower

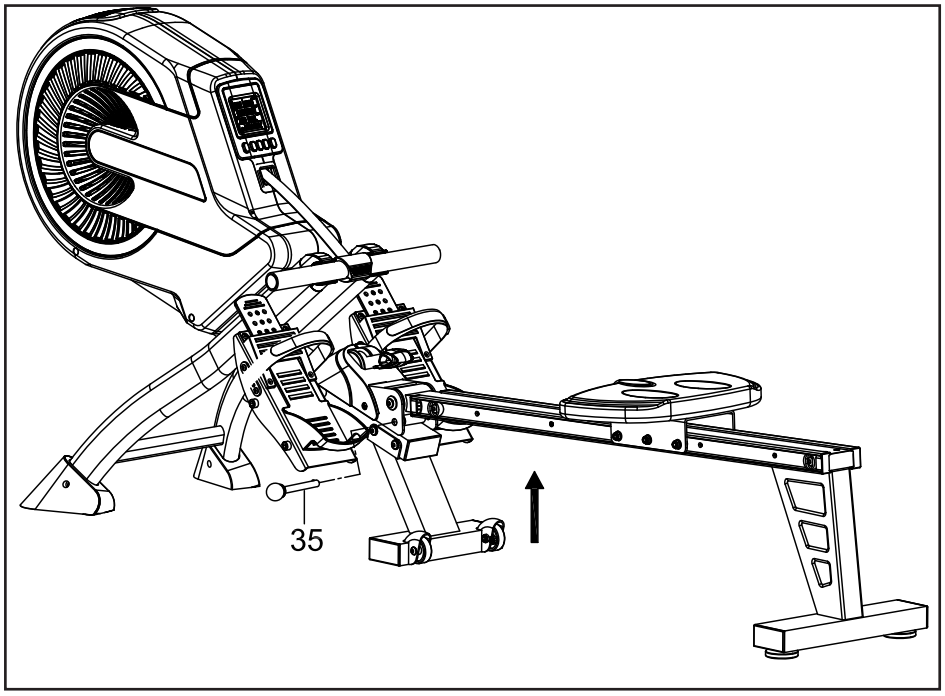

1. To fold the machine for storage, the ball pin can be removed and the slide rail can be lifted up. Remember to replace the pin.

9 Battery Replacement

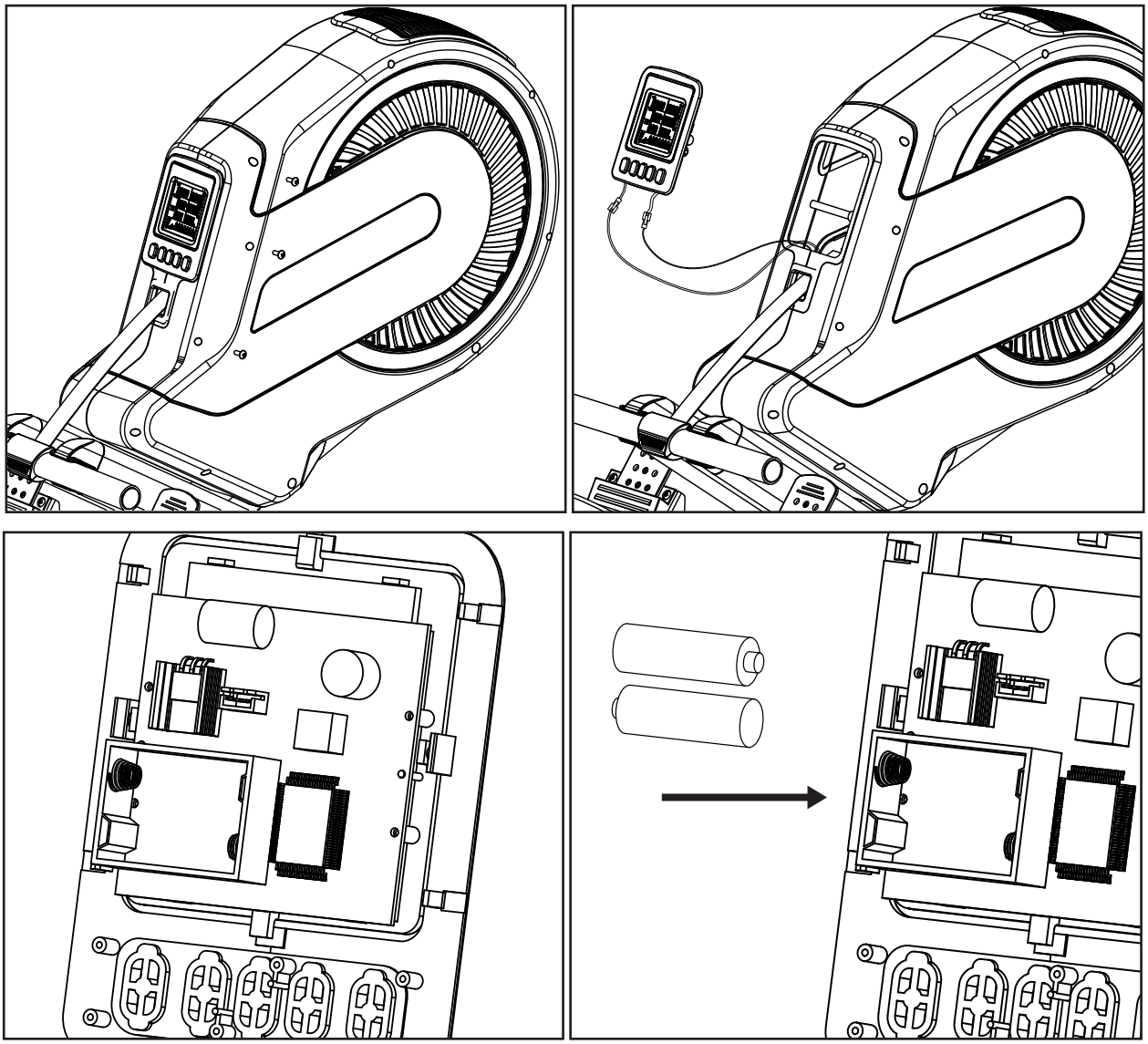

1. Loosen the 3 screws on the right side fo the console. Gently ease the console panel out of the shroud.

2. On the back panel, replace batteries. Make sure they fit tightly in the correct postions.

3. Place console back into shroud and retighten the 3 screws.

Operation of Your Console

ERG**500** Console



Key Functions

BUTTONS:

MODE: Select to change between the presets TIME, COUNT, DISTANCE, CALORIES, and PULSE.

PULSE RECOVERY:

*** It is functional only when used with the wireless chest belt (not included) ***

The console has a Recovery Mode. This lets you monitor how quickly you recover from exercising. After your exercise session press the Recovery button, the LCD console will then count down from 60 seconds to zero. After this, a fitness score F1 to F6 will be displayed on console.

F1.0 = Excellent F2.0 = Good F3.0 = Fair F4.0 = below average

F5.0 = No Good F6.0 = Poor

RESET: Press and hold this button for 2 seconds to reset all of the value to Zero.

UP:Increase the setting value of the following functions.

TIME, COUNT, DISTANCE, CALORIES, and PULSE.

DOWN: Decrease the setting value of the following functions.

TIME, COUNT, DISTANCE, CALORIES, and PULSE.

Functions

TIME: Accumulates total work out time from 00:00 up to 99:59. You may also select a target time before training by pressing “UP” and “DOWN” buttons. Each setting is 1:00 minute.

As soon as the target time is achieved, time will start counting up immediately and sound an 3 second alarm.

DISTANCE: Accumulates training distance from 0.0 up to 99.9 M (MILE). You may also preset the target distance before training by pressing “UP” and “DOWN” buttons. Each setting is 0.1 M (MILE).

As soon as the target distance is achieved, distance will start counting up immediately and sound an 3 second alarm.

COUNT: Accumulates total count from 0 up to 9999. You may also preset the target count before training by pressing “UP” and “DOWN” buttons. Each setting is 10 count.

As soon as the target count is achieved, count will start up immediately and sound an 3 second alarm.

CALORIE: Accumulates calories consumption during training from 0 up to 9999 kcal with each increment 0.1kcal. You may also preset the target calorie before training by pressing “UP” and “DOWN” buttons. Each setting is 1 kcal increment.

As soon as the target calorie is achieved, the calorie value will start up immediately and sound an 3 second alarm.

(This data is a rough guide for comparison between different exercise sessions and should not be used as a medical standard.)

PULSE: Your current pulse rate from 40 to 220bpm will be displayed on the LCD console whenever you wear the wireless chest belt (optional item, not included).

If no heart rate signals are detected for 3 seconds, the console will show “P“.

You can set a target heart rate before training by pressing “UP” and “DOWN” buttons within the rate zone 90 to 220. Each increment is 1 heart beat.

If you go above your target heart rate, the LCD Pulse value will flash and ask you reduce the intensity of your exercise.

NOTE: If no signal has been transmitted into console for 4 minutes, the LCD display will shut off automatically and all function data will reset to Zero. You may press any button or start training to have the console power on again.

TRAVEL DISTANCE: Displays your stroke travel distance visually on the LCD.



BATTERY REPLACEMENT:

Quick release the lock on the bottom of the console, slide cover out carefully. Install two AAA batteries in the battery case inside the console.

Ensure that the batteries are correctly fitted. Battery must be correctly positioned and make sure the battery spring has proper contact with batteries.

IF the displays appear blank or display only partial segments, remove the batteries and wait 15 seconds then restore them.

Whenever you remove the batteries, all the functional values will be reset to zero.

Trouble Shooting

Problem	Cause	Solution
Monitor does not display	Batteries not Installed	Install Batteries
	Computer Wires not connected	Ensure the computer wires are connected properly at the upright and computer
No count or distance displays on the monitor	Sensor wire not connected	Ensure the computer wires are connected properly at the upright and the computer
	Sensor wire not working properly	Replace sensor wire
	Monitor not working properly	Replace monitor
No Tension	Air Damper needs Adjustment	Adjust tension lever accordingly
Squealing	Belt slipping	Adjust Belt

Manufacturer's Limited Warranty

Effective August 21, 2018 - ROWER LIMITED WARRANTY

XTERRA Fitness Inc. warrants all its home use Rower parts for a period of time listed below, from the date of retail sale, as determined by a sales receipt or in the absence of a sales receipt, eighteen (18) months from the original factory shipping date. XTERRA Fitness' responsibilities include providing new or remanufactured parts, at XTERRA Fitness' option, and technical support to our independent dealers and servicing organizations. In the absence of a dealer or service organization, these warranties will be administered by XTERRA Fitness directly to a consumer. The warranty period applies to the following components:

Home Use Limited Warranty		
Frame	Parts	Labor
5 Years	2 Years	90 Days

NORMAL RESPONSIBILITIES OF THE CONSUMER

This warranty applies only to products in ordinary household use. The consumer is responsible for the items listed below:

1. The warranty registration card must be completed and returned to the address listed on the card within 10 days of the original purchase to validate the manufacturer's limited warranty or register online at the XTERRA Fitness website.
2. Proper use of the Rower in accordance with the instructions provided in this manual, including maintenance.
3. Proper connection to a power supply of sufficient voltage, replacement of blown fuses, repair of loose connections or defects in house/facility wiring.
4. Expenses for making the Rower accessible for servicing, including any item that was not part of the Rower at the time it was shipped from the factory.
5. Damages to the Rower finish during shipping, installation or following installation.

EXCLUSIONS

This warranty does not cover the following:

1. CONSEQUENTIAL, COLLATERAL, OR INCIDENTAL DAMAGES SUCH AS PROPERTY DAMAGE AND INCIDENTAL EXPENSESRESULTING FROM ANY BREACH OF THIS WRITTEN OR ANY IMPLIED WARRANTY. Note: Some states do not allow the exclusion or limitation of incidental or consequential damages, so this limitation or exclusion may not apply to you.
2. Service call reimbursement to the consumer. Service call reimbursement to the dealer that does not involve malfunction or defects in workmanship or material, for units that are beyond the warranty period, for units that are beyond the service call reimbursement period, for Rowers not requiring component replacement, or Rowers not in ordinary household use.
3. Damages caused by services performed by persons other than authorized XTERRA Fitness service companies, use of parts other than original XTERRA Fitness parts, or external causes such as alterations, modifications, abuse, misuse, accident, improper maintenance, inadequate power supply, or acts of God.
4. Products with original serial numbers that have been removed or altered.
5. Products that have been; sold, transferred, bartered, or given to a third party.
6. Products that are used as store display models.
7. Products that do not have a warranty registration on file at XTERRA Fitness Inc. XTERRA Fitness reserves the right to request proof of purchase if no warranty record exists for the product.
8. Product use in any environment other than a residential setting.
9. THIS WARRANTY IS EXPRESSLY IN LIEU OF ALL OTHER WARRANTIES EXPRESSED OR IMPLIED, INCLUDING THE WARRANTIES OF MERCHANTABILITY AND/OR FITNESS FOR A PARTICULAR PURPOSE.

SERVICE

Keep your bill of sale. Twelve (12) months from the date on the bill of sale or eighteen (18) months from the date of factory shipping as determined by the serial number establishes the warranty period should service be required. If service is performed, it is in your best interest to obtain and keep all receipts. This written warranty gives you specific legal rights. You may also have other rights that vary from state to state. Service under this warranty must be obtained by following these steps, in order:

1. Contact your selling authorized XTERRA Fitness dealer. OR
2. Contact your local authorized XTERRA Fitness service organization.
3. If there is a question as to where to obtain service, contact our service department at (870)333-5500
4. XTERRA Fitness' obligation under this warranty is limited to repairing or replacing, at XTERRA Fitness' option, the product through one of our authorized service centers. All repairs must be preauthorized by XTERRA Fitness. If the product is shipped to a service center freight charges to and from the service center will be the customer's responsibility. For replacement parts shipped while the product is under warranty, the customer will be responsible for shipping and handling charges. For in-home service, the customer will be responsible for a trip charge. There will be an additional trip charge if the customer is located over 100 miles from the nearest service center.
5. The owner is responsible for adequate packaging upon return to XTERRA Fitness. XTERRA Fitness is not responsible for damages in shipping. Make all freight damage claims with the appropriate freight carrier. DO NOT SHIP ANY UNIT TO OUR FACTORY WITHOUT A RETURN AUTHORIZATION NUMBER. All units arriving without a return authorization number will be refused.
6. For any further information, or to contact our service department by mail, send your correspondence to:

XTERRA Fitness, Inc.
P.O. Box 2037
Jonesboro, AR 72402-2037

Product features or specifications as described or illustrated are subject to change without notice. All warranties are made by XTERRA Fitness, Inc. This warranty applies only in the 48 contiguous United States. NOTE: This does not include Alaska or Hawaii.

3000 Nestle Road Jonesboro, AR 72401 - Phone:870-333-5500 - Fax:870-935-7611

©2018 All RIghts Reserved.