XTERRA FITNESS

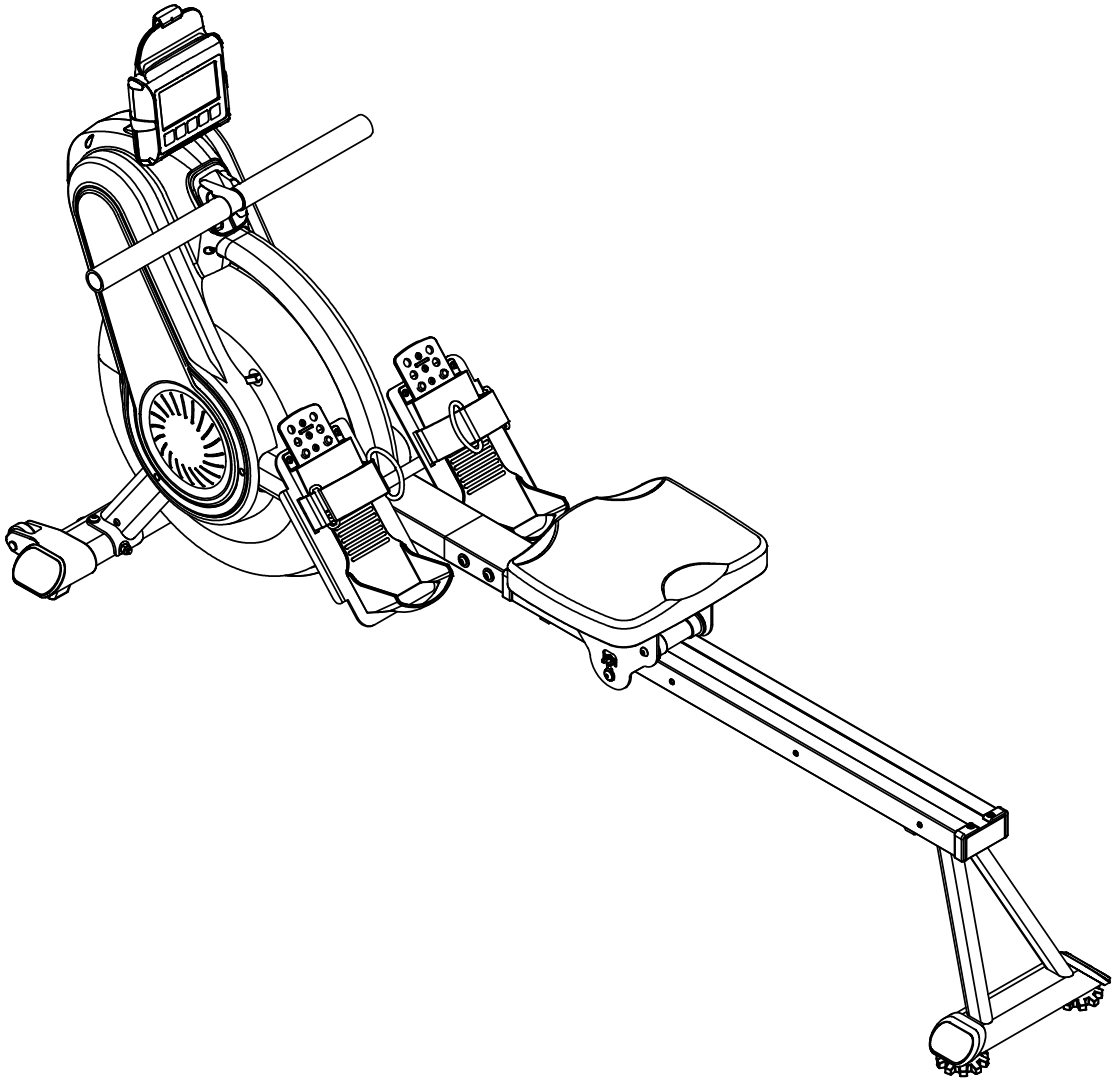

*ERG***550W** *WATER ROWING MACHINE*

OWNER'S MANUAL

PLEASE CAREFULLY READ THIS ENTIRE MANUAL BEFORE OPERATING YOUR NEW ROWER

Congratulations On Your New Rower and Welcome to the XTERRA Fitness Family!

Thank you for your purchase of this quality rower from **XTERRA Fitness**. Your new rower has been manufactured by one of the leading fitness manufacturers in the world. **XTERRA Fitness** will do all we can to make your ownership experience as pleasant as possible for many years to come. If you have questions, or if parts are missing or damaged, or you require customer service, call (870) 333-5500. Please have your model number and serial number handy when you call.

Please take a moment to record where you purchased your machine, as well as the date of purchase for future reference. We appreciate your confidence in **XTERRA Fitness** and we will always remember that you are the reason that we are in business. Please complete and mail your registration card today and enjoy your new rower.

Yours in Health,
XTERRA Fitness

Table Of Contents

Product Registration	**1**
Important Safety Instructions	**2**
ERG550W Assembly Instructions	**4**
Fill and Empty the Tank	**13**
Adjustment Guides	**14**
Transport & Storage	**15**
Console Operation	**16**
Manufacturer’s Limited Warranty	**23**
Exploded View	**24**
Parts List	**25**

Product Registration

Purchase Location _____

Purchase Date _____

Record Your Serial Number
Please record the Serial Number of this fitness product in the space provided below.

Serial Number

_____

Register Your Purchase
The self-addressed product registration card must be completed in full and returned to **XTERRA Fitness**. You can also go to ***www.xterrafitness.com/warranty*** to register on-line.

ATTENTION

THIS ROWER IS INTENDED FOR **RESIDENTIAL USE ONLY** AND IS WARRANTED FOR THE APPLICATION. ANY OTHER APPLICATION **VOIDS** THIS WARRANTY IN ITS ENTIRETY.

Important Safety Instructions

When using an appliance, basic precautions should always be followed, including the following:

Read all instructions before using this appliance.

WARNING - To reduce the risk injury to persons:

1. Do not operate under blanket.
2. Operate the machinery with ample free space around it to easily get on and off the machine.
3. This exercise equipment is not intended for use by persons with reduced physical, sensory or mental capabilities, or lack of experience and knowledge.
4. Keep children and pets away from the machine at all times. DO NOT leave children unattended in the same room with the machine.
5. Use this appliance only for its intended use as described in this manual. Do not use attachments not recommended by the manufacturer.
6. Never operate this appliance if it is not working properly, if it has been dropped or damaged, or dropped into water. Return the appliance to a service center for examination and repair.
7. Keep the appliance away from heated surfaces.
8. Never operate the appliance with the air openings blocked. Keep the air openings free of lint, hair, and the like.
9. Never drop or insert any object into any opening.
10. Do not use outdoors.
11. The appliance is intended for household use.
12. After assembly, make sure to tighten all nuts and bolts.



WARNING: This product can expose you to chemicals including Toluene and Acrylamide which are known to the State of California to cause cancer and birth defects or other reproductive harm.
For more information go to www.P65Warnings.ca.gov

Fitness Equipment Safety Instructions

- Do not operate equipment on deeply padded, plush or shag carpet. Damage to both carpet and equipment may result.
- Before beginning this or any exercise program, consult a physician. This is especially important for persons over the age of 35 or persons with pre-existing health conditions.
- Keep hands away from all moving parts.
- Do not attempt to use your equipment for any purpose other than for the purpose it is intended.
- Wear proper shoes. High heels, dress shoes, sandals or bare feet are not suitable for use on your equipment. Quality athletic shoes are recommended to avoid leg fatigue.
- Wear proper clothing for exercising, loose clothing could become caught in the machine.
- Only one person at a time should use the machine.
- If the user experiences dizziness, nausea, chest pain, or any other abnormal symptoms, STOP the workout at once. CONSULT A PHYSICIAN IMMEDIATELY.
- Do not place any sharp object around the machine.
- Always use caution when moving and storing your equipment.
- User Weight Limit: 300 LB

Failure to follow all guidelines may compromise the effectiveness of the exercise experience, expose yourself (and possibly others) to injury, and reduce the longevity of the equipment.

SAVE THESE INSTRUCTIONS - THINK SAFETY!

CAUTION!! Please be careful when unpacking the carton.

Before you begin

Thank you for selecting our revolutionary XTERRA ERG550W Water Rowing Machine. A rower is an effective exercise for increasing cardiovascular fitness, building endurance, and toning the body. Our Water Rowing Machine provides an impressive selection of features designed to make your workouts at home more effective and enjoyable.

For your benefit, read this manual carefully before you use the ERG550W Water Rowing Machine. To help us assist you, note the product model number and serial number before contacting us. Before reading further, please familiarize yourself with the parts that are labeled in the drawing below.

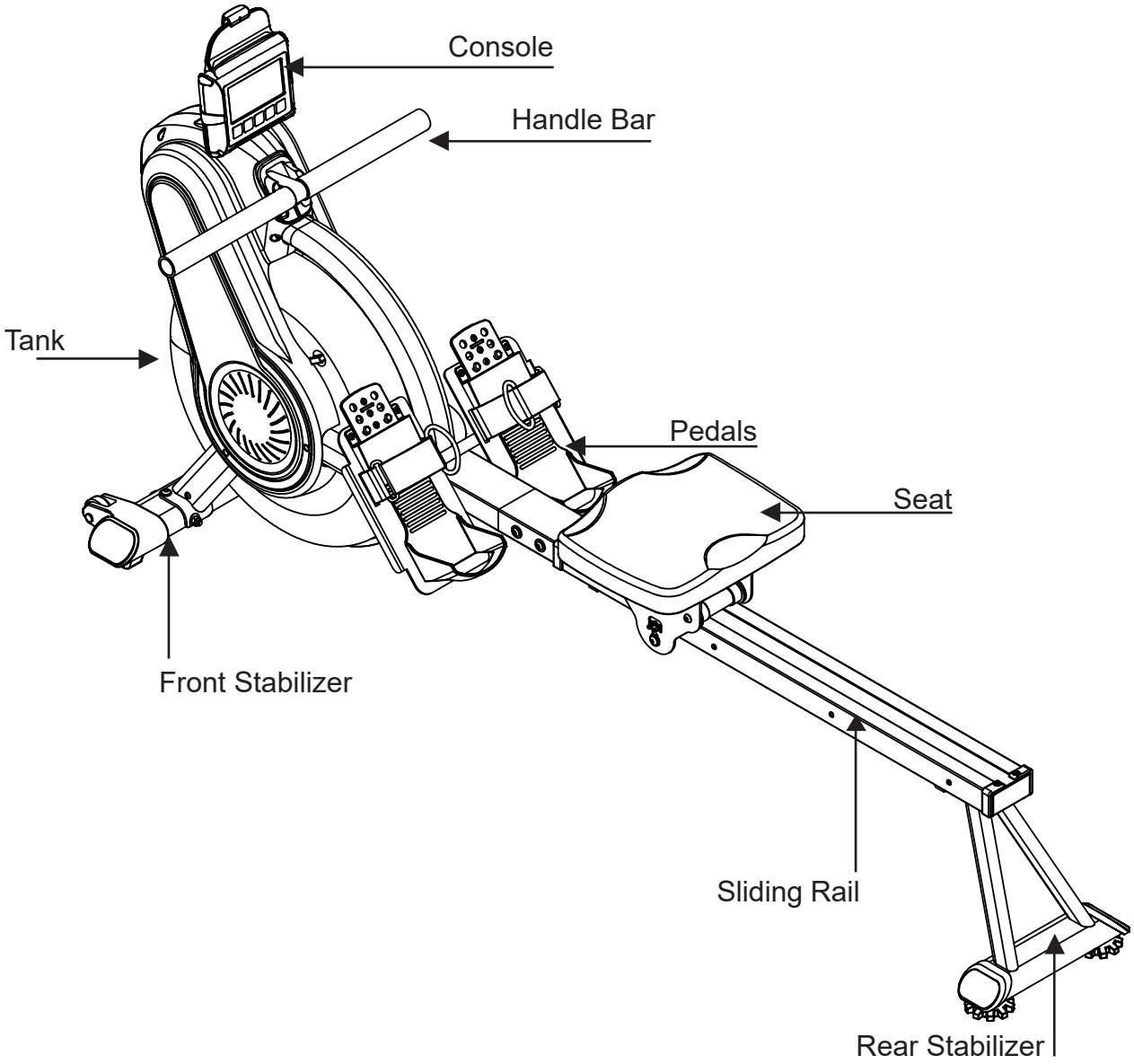

*ERG***550W** Assembly Part Checklist

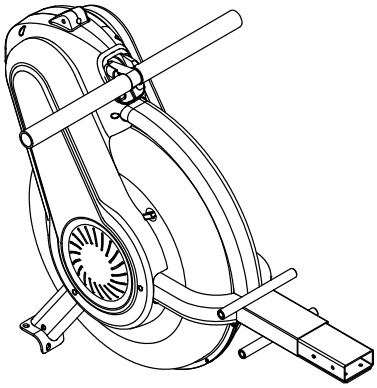

NO.1

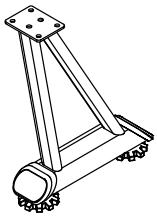

NO.3



NO.54

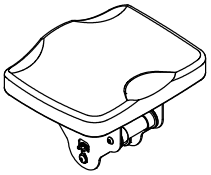

NO.17

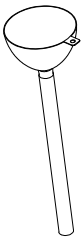

NO.90

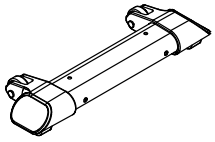

NO.4

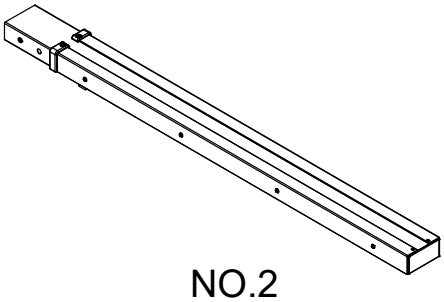

NO.2

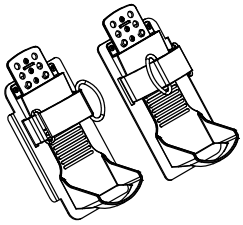

NO.83、104



NO.91

*ERG***550W** Assembly Part Checklist

Part No	Description	Q'ty
1	Main Frame	1
3	Front Stabilizer	1
54	Console	1
17	Seat	1
90	Funnel	1
4	Front Stabilizer	1
2	Slide Rail	1
83	Pedal Plate L	1
104	Pedal Plate R	1
91	Siphon Pump	1
	User Manual	1
	Hardware Parts	1

Note: Above parts are all needed to assemble this machine. Before you start to assemble, please check the hardware packing to make sure they are included.

*ERG***550W** Assembly Pack Checklist

Hardware Package

Step 1

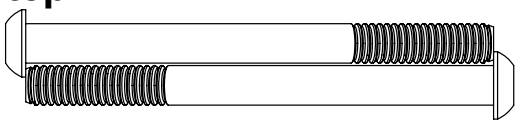

(#73) Hex Socket Round Head Screw M8*95 2pcs

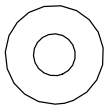

(#99) Curved Washer 4pcs



(#80) Hex Nut M8 2pcs

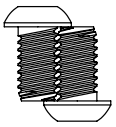

(#67) Hex Socket Round Head Screw M8*15 2pcs



(#27) Flat Washer 2pcs

Step 2

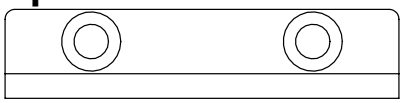

(#40) Rubber pad 1pc

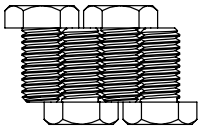

(#62) Hex Bolt M8*10 4pcs



(#65) Hex Socket Screw M6*10 2pcs

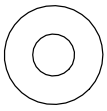

(#27) Flat Washer 4pcs

Step 3



(#101) ST4*10 2pcs

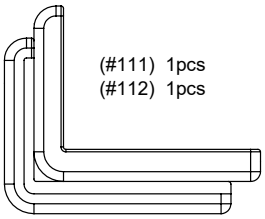

(#111) 1pcs
(#112) 1pcs

Step 4

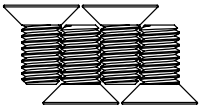

(#66) Hex Socket Screw M8*15 4pcs

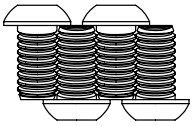

(#67) Hex Socket Round Head Screw M8*15 4pcs

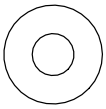

(#74) Flat Washer 4pcs

Step 5

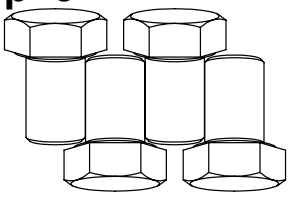

(#114) Hex Bolt M12*18 4pcs

Step 6

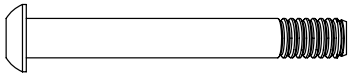

(#51) Hex Socket Round Head Screw M8*65 1pcs

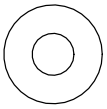

(#74) Flat Washer 1pcs



(#80) Hex Nut M8 1pcs

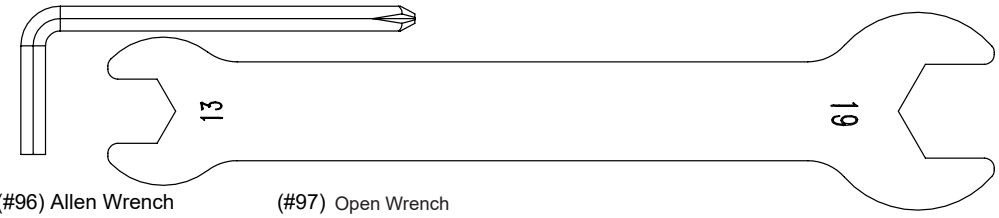

(#96) Allen Wrench with Phillips Screwdriver

(#97) Open Wrench

*ERG***550W** Assembly Instructions

1 Front Stabilizer

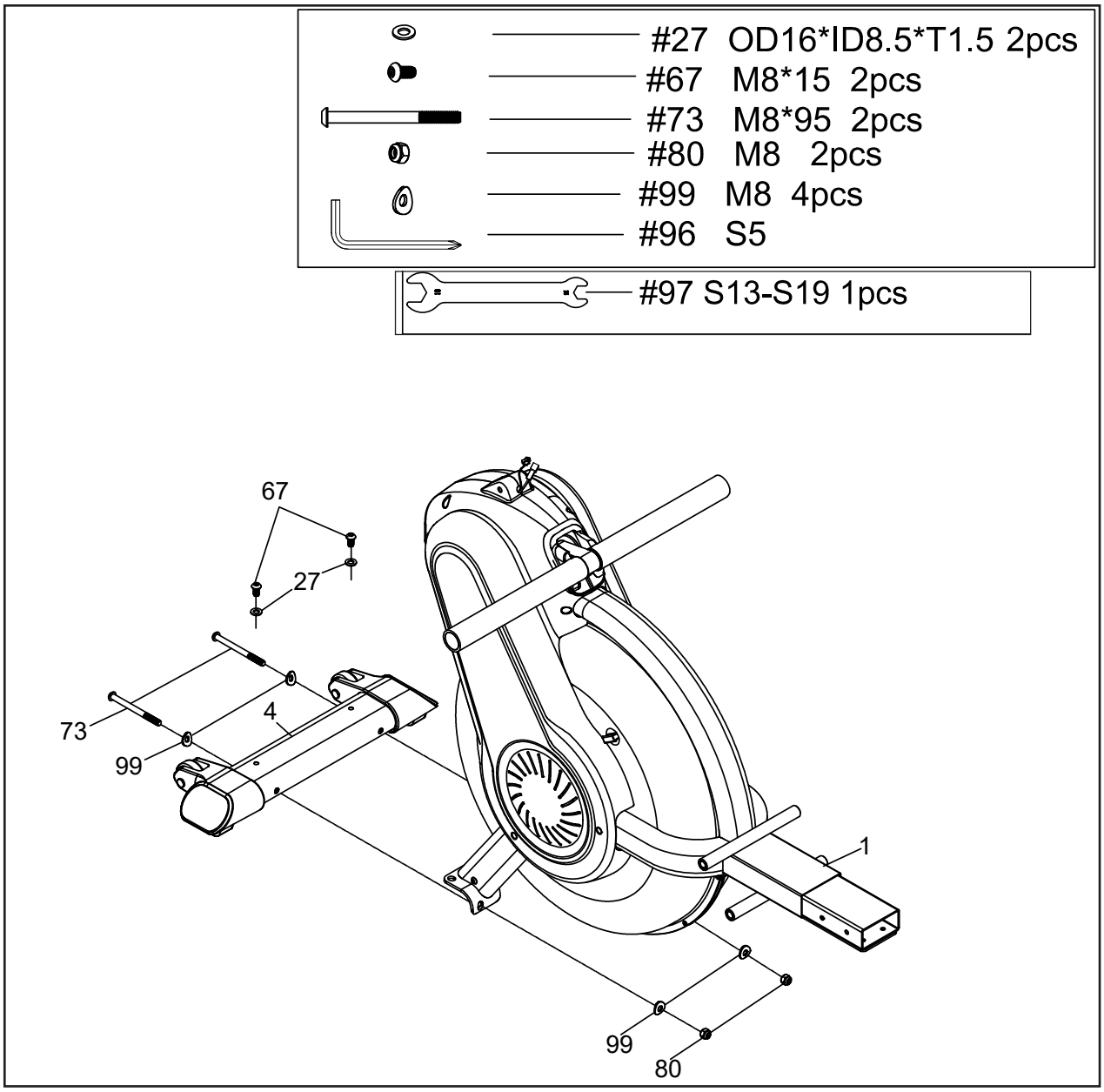

NOTE: We recommend having 2 people to assemble the product. Please be careful when assembling Step 1. The Main Frame is easy to topple.

1. Attach the **Front Stabilizer (No.4)** onto the **Main Frame (No.1)** with 4 **Curved Washers (No.99)** and 2 **Hex Socket Round Head Screws (No.73)** and 2 **Nylon Hex Nuts (No.80)**.
2. Secure the **Front Stabilizer (No.4)** to the **Main Frame (No.1)** with 2 **Flat Washers (No.27)**, 2 **Hex Socket Round Head Screws (No.67).**
3. Tighten using the **Allen Wrench with Phillips Screwdriver (No.96)** and **Open Wrench (No.97)** provided.

2 Rear Stabilizer and Seat

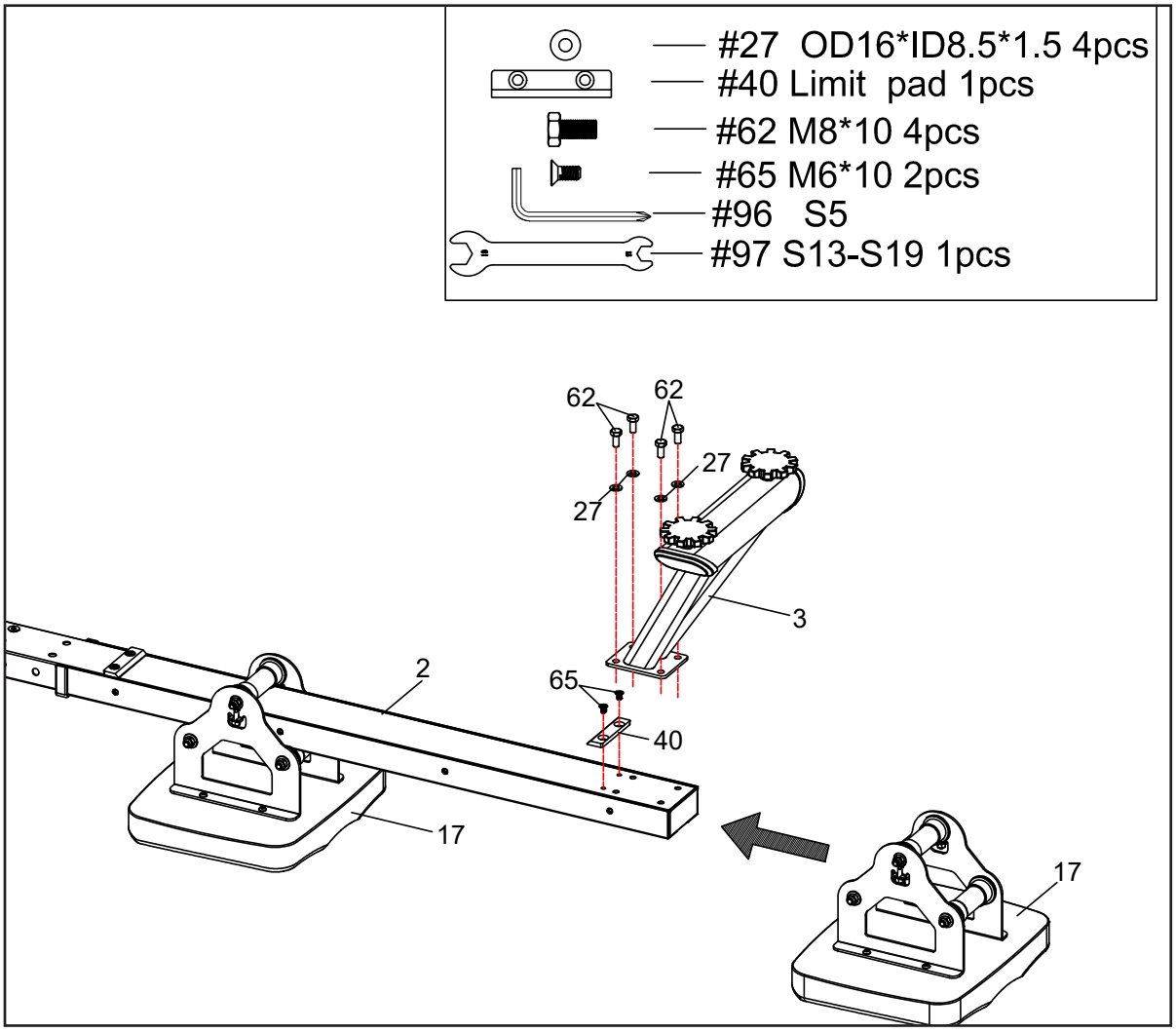

1. Turn over the **Slide Rail (No.2)** and **Seat (No.17)** as shown.
2. Slide the **Seat (No.17)** onto the **Slide Rail (No.2)**.
3. Secure the **Limit Pad (No.40)** with 2 **Hex Socket Screws (No.65)**. Then attach the **Rear Stabilizer (No.3)** to the **Slide Rail (No.2)** with 4 **Flat Washers (No.27)** and 4 **Hex Bolts (No.62)**.
4. Tighten with **Allen Wrench with Phillips Screwdriver (No.96)** and the **Open Wrench (No.97)** .

3 Seat Stop

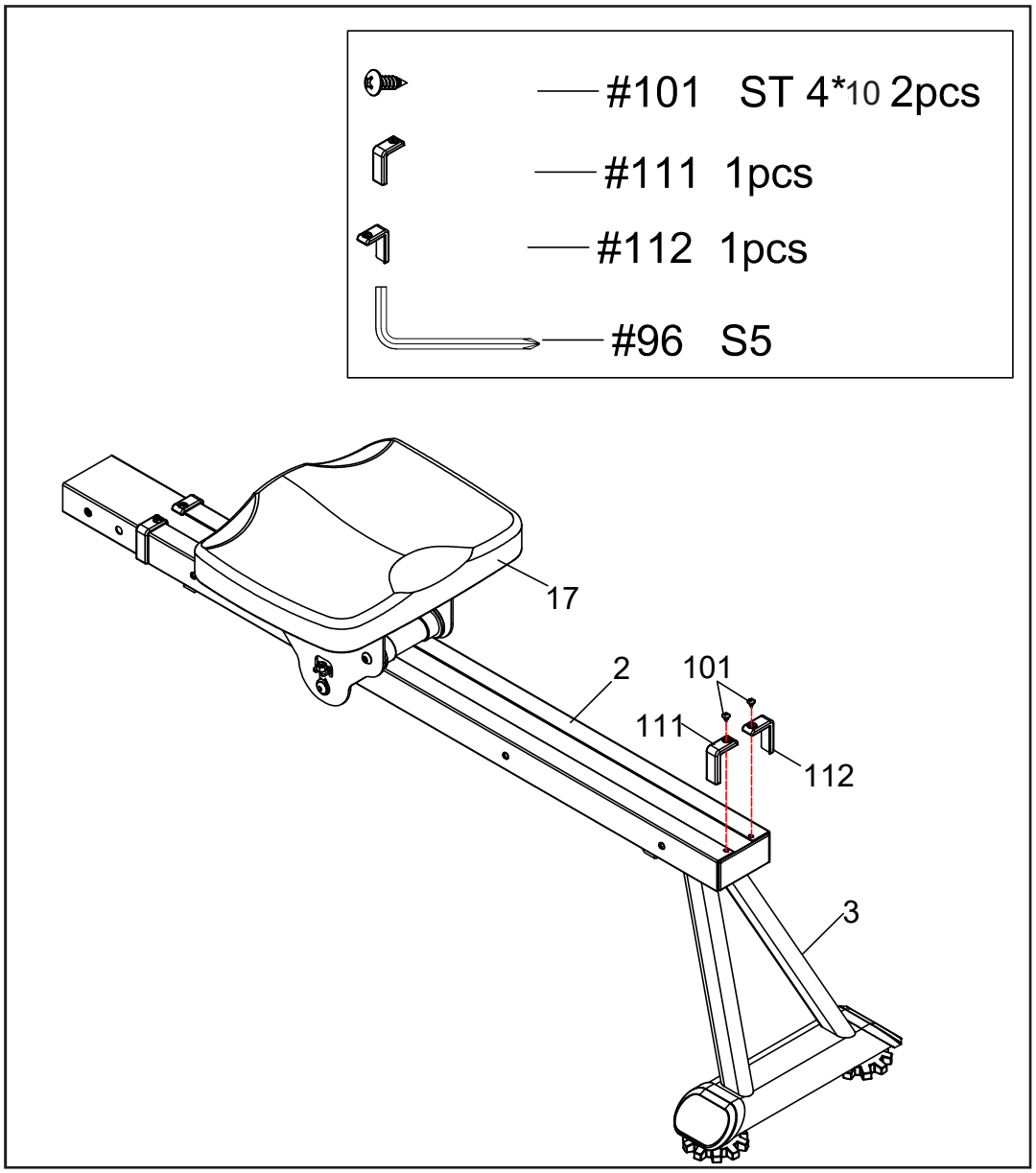

1. Attach the **Stop Brackets L / R (No.111 / 112)** to the **Sliding Rail (No.2)** and tighten the caps with 2 **Self-tapping screws (No.101)**.
2. Tighten using the **Allen Wrench with Phillips Screwdriver (No.96)** provided.

4 Main Frame

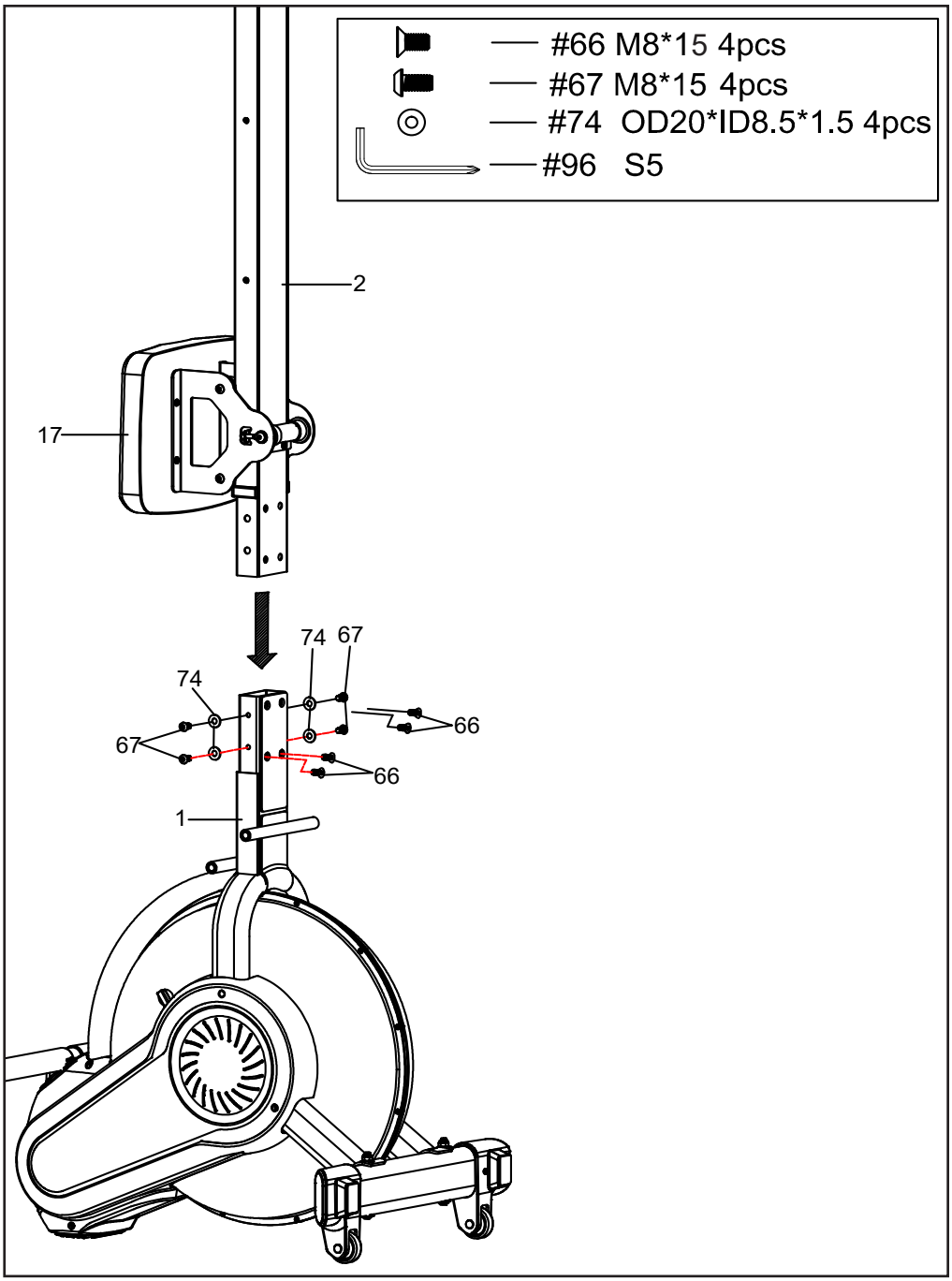

NOTE: Move the **Seat (No.17)** to the front of the **Slide Rail (No.2)** before assembly to prevent it from sliding down during assembly.

1. Attach the **Slide Rail (No.2)** to the **Main Frame (No.1)** using 4 **Flat Washers (No.74)**, 4 **Hex Socket Round Hex Screws (No.67)** and 4 **Hex Socket Screws (No.66).** Insert all 8 screws partially into the holes first, and then tighten using the **Allen Wrench with Phillips Screwdriver (No.96).**

5 Pedals

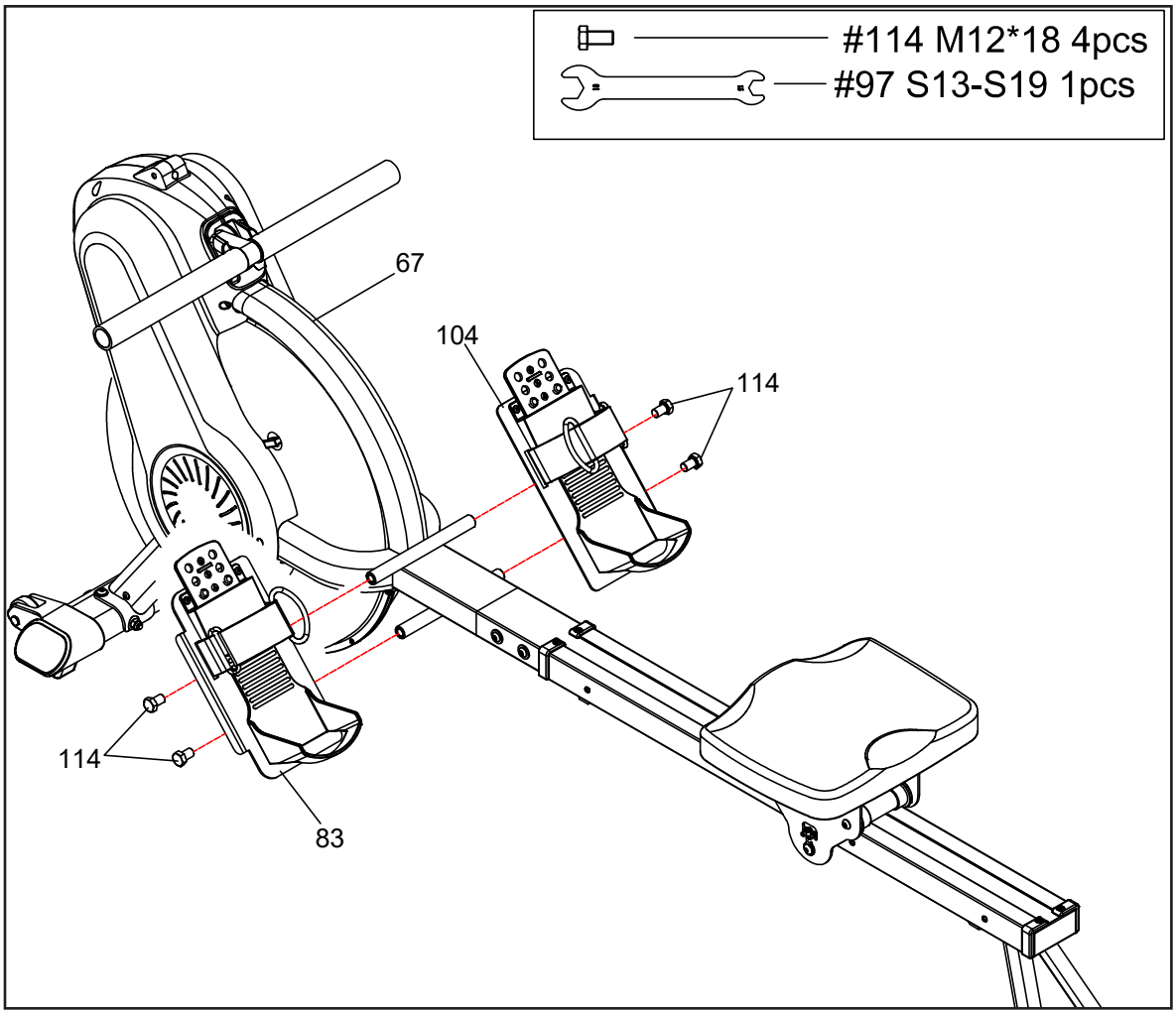

1. Screw the **Pedal Plate L (No.83)** into the **Main Frame (No.1)** with 2 **Hex Bolts (No.114)** using the **Open Wrench (No.97)**. Tighten.
2. Repeat for **Pedal Plate R (No.104)** to **Main Frame (No.1)**.

6 Console

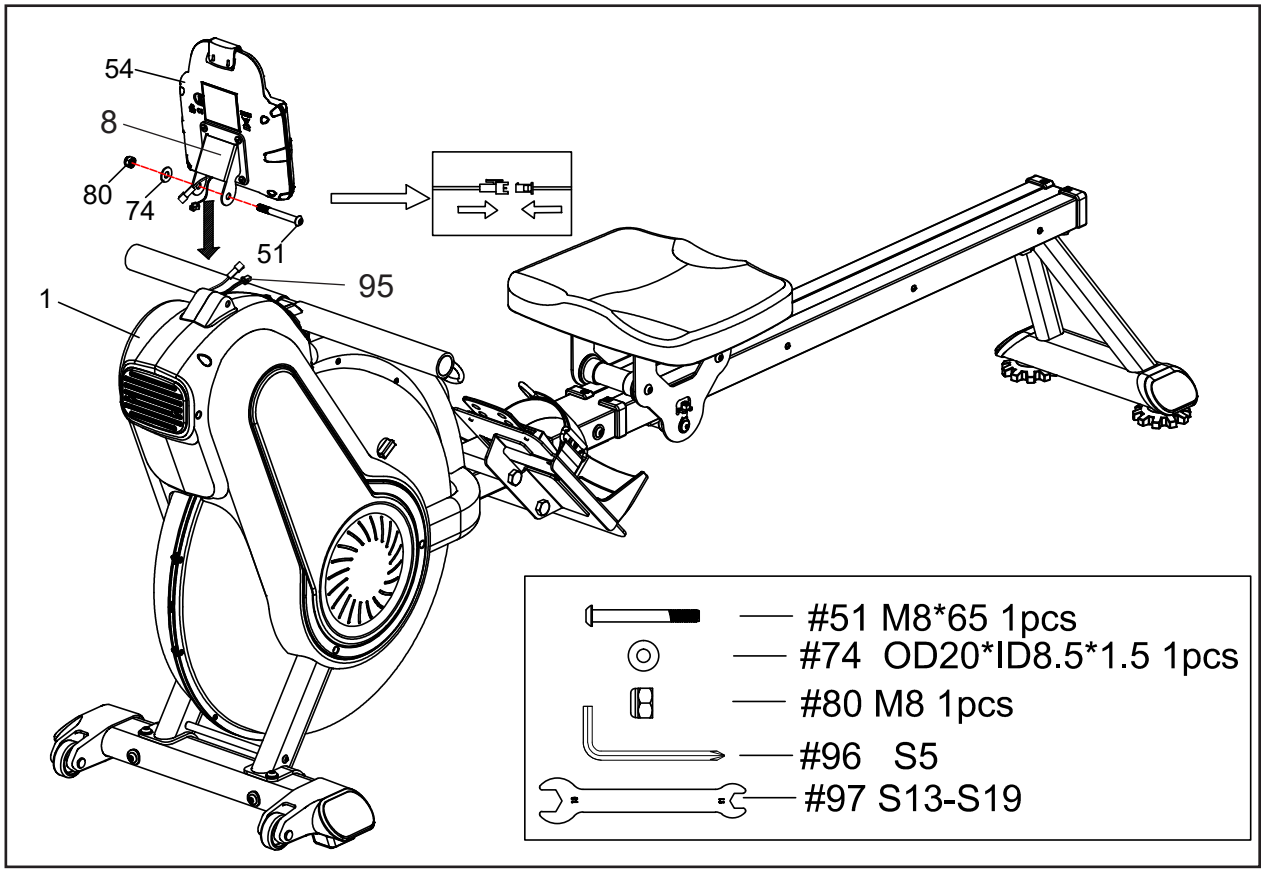

1. Connect the wire of **Console (No.54)** to the **Sensor Wire Set (No.95)** from the **Main Frame (No.1)**.
2. Attach the **Console Bracket (No.8)** which is pre-installed on the **Console (No.54)** onto the **Main Frame (No.1)** with 1 **Hex Socket Round Head Screw (No.51)**, 1 **Flat Washer (No.74)** and 1 **Nylon Hex Nut (No.80)**.
3. Tighten using the **Allen Wrench with Phillips Screwdriver (No.96)** and **Open Wrench (No.97)** provided.

How to Fill and Empty the Tank

1. Remove the **Fill Plug (No.50)** from the **Upper Tank Cover (No.24)**.

2. To fill tank with water, refer to Fig. A. Insert the **Funnel (No.90)** into the tank, then use a cup or the **Siphon Pump (No.91)** and a bucket to fill the tank. Use the water level gauge on the side of the tank to measure desired water level in the tank.

3. To empty the tank, refer to Fig. B. Place a bucket next to the rower, and use the **Siphon Pump (No.91)** to pump out the water from the tank into the bucket.

4. Insert the **Fill Plug (No.50)** into the **Upper Tank Cover (No.24)**. Wipe excess water off of the frame.

NOTE:

- Fill the tank only with tap water. Never use pool chlorine or chlorine bleach. This will damage the tank and void the warranty.

- Add a Water Purification Tablet every 6 months or as needed. Humidity and temperature can play a role. If water remains cloudy, replace the water in the tank.

- Water from the tank is not suitable for consumption. Dispose the water after pumping it out from the tank.

- To extend the life of your rower and prolong use between tank cleanings, please purchase water cleaning tablets at www.xterrafitness.com, or by calling 1-(870) 333-5500.

WATER LEVEL

- See Fig. A. The water level gauge is on the side of the tank. The maximum fill level is 6. Never fill it over this limit. Filling the tank over this limit will void the warranty.
- The resistance depends on the water level in the tank.
  Water level 1 is the lowest resistance. Level 6 is the highest resistance.

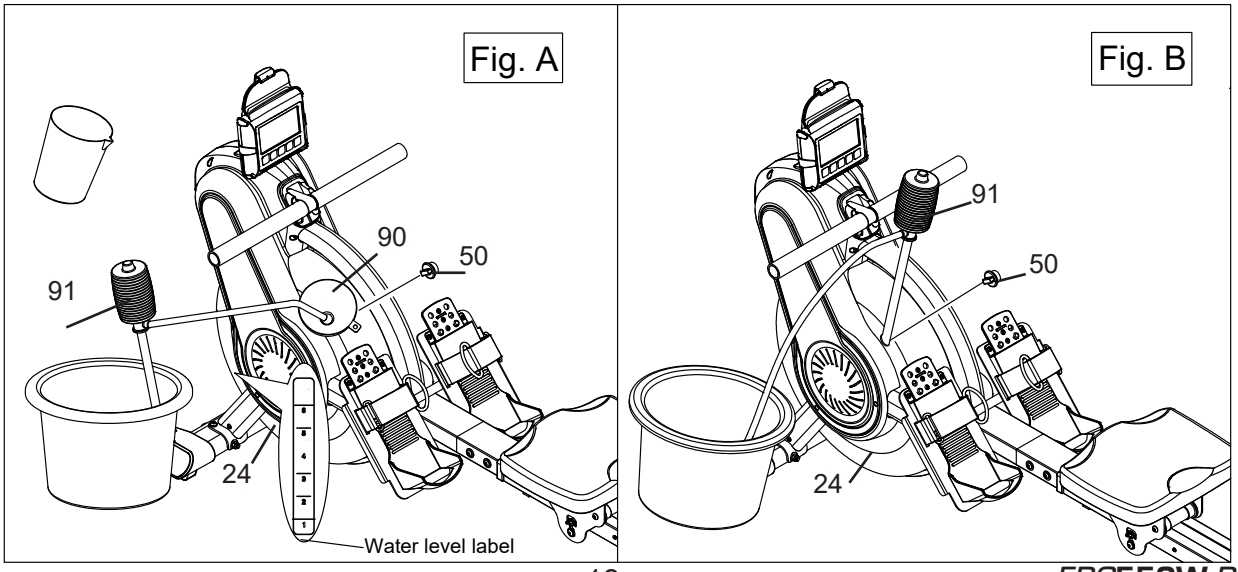

Water Tank Capacity

Level	Capacity (Liters)	Capacity (Gallons)	Capacity (Quarts)
L1	6.5	1.72	6.86
L2	7.1	1.87	7.50
L3	7.8	2.06	8.24
L4	8.4	2.22	8.87
L5	9	2.38	9.50
L6	10	2.64	10.56

Adjustment Guides

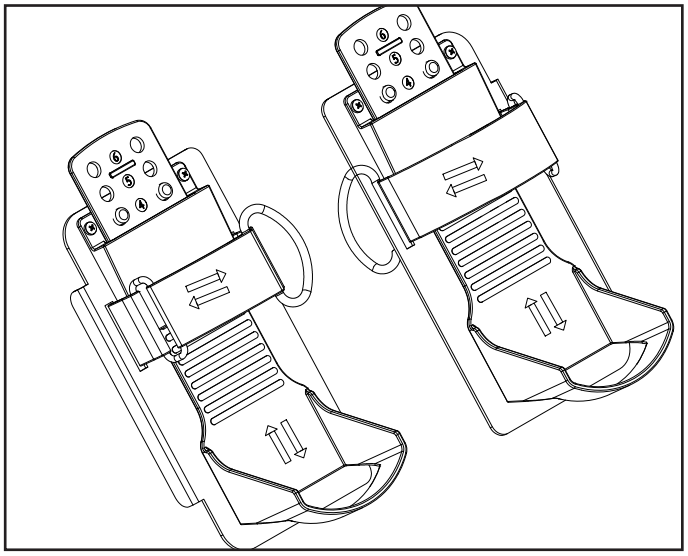

The pedal strap is adjustable and can be personalized to fit the user's foot size.

To adjust the pedal strap, remove the Velcro end of the strap from the mesh side by pulling it upward and over to the side.

Once removed, you may increase the opening of the pedal strap by pulling the mesh end up and to the side.

To tighten, pull the Velcro end of the pedal strap upward then over and down to secure it to the mesh side of the strap.

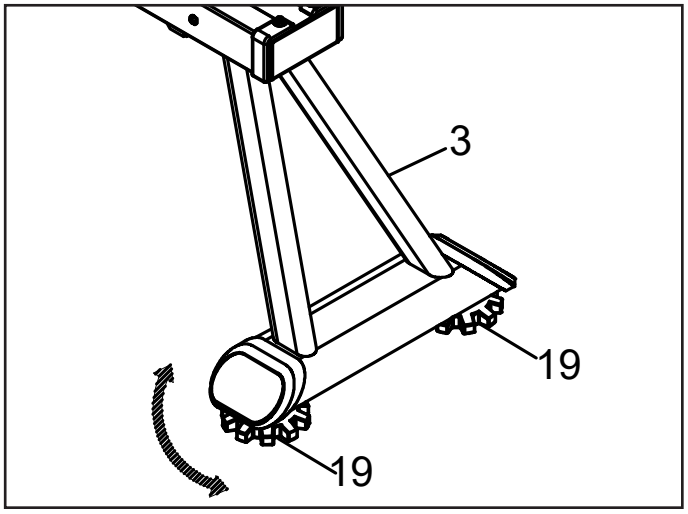

Adjusting the Balance

Adjust the **Adjustable Floor Stabilizers (No.19)** below the **Rear Stabilizer (No.3)** of the machine if the machine is unbalanced during use.

CAUTION!

Moving parts, such as the seat, can crush and cut. Keep hands clear of the Slide Rail during use.

Transport and Storage

To move the machine, lift up the rear stabilizer until the transportation wheels on the front stand touch the ground. With the wheels on the ground, you can transport the rower to the desired location with ease.

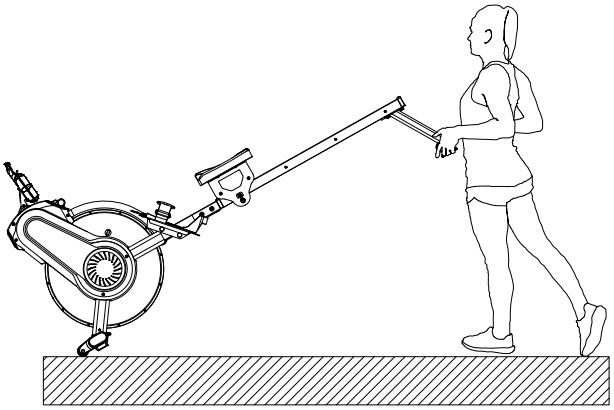

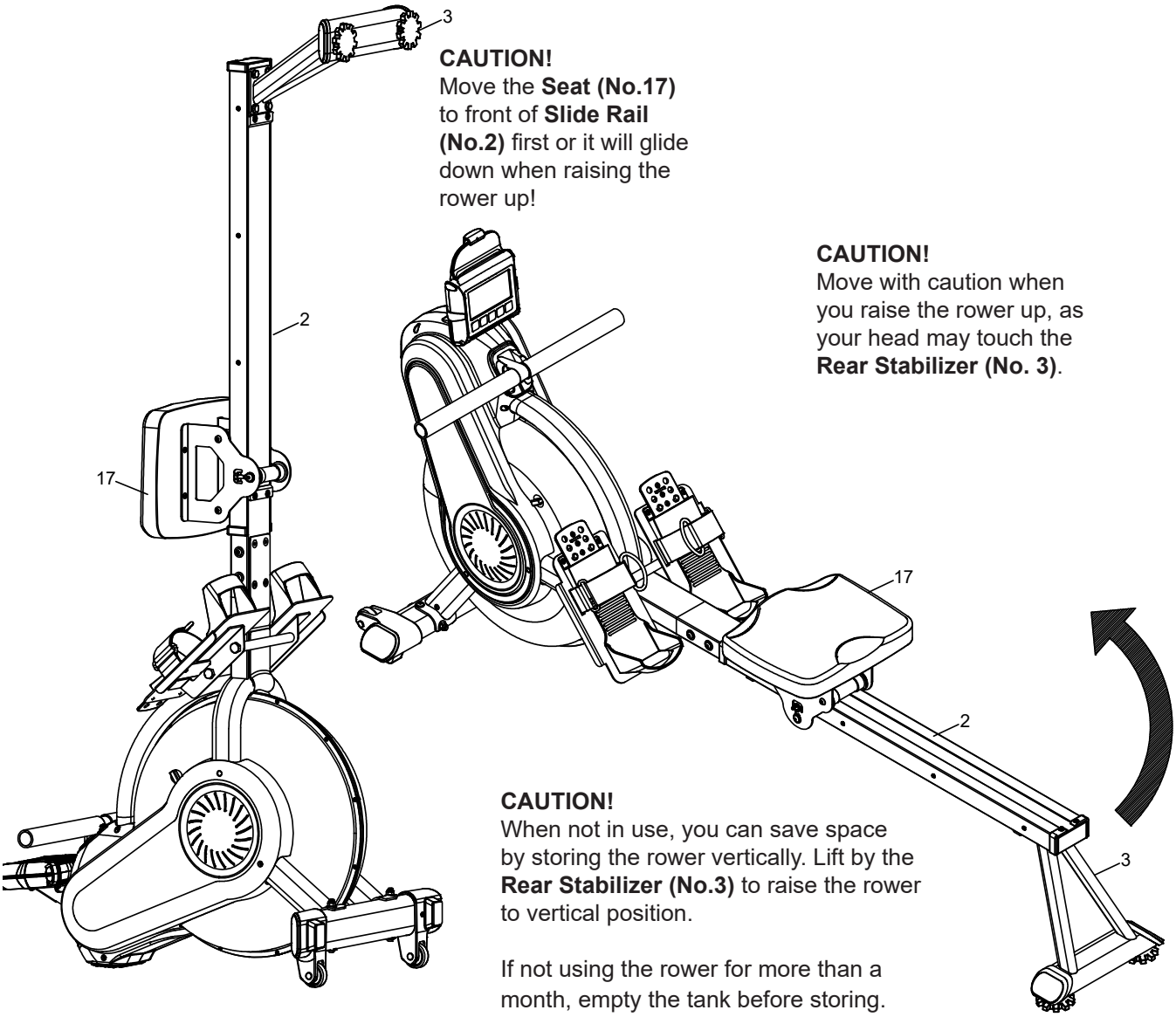

CAUTION!
Move the **Seat (No.17)** to front of **Slide Rail (No.2)** first or it will glide down when raising the rower up!

CAUTION!
Move with caution when you raise the rower up, as your head may touch the **Rear Stabilizer (No. 3)**.

CAUTION!
When not in use, you can save space by storing the rower vertically. Lift by the **Rear Stabilizer (No.3)** to raise the rower to vertical position.

If not using the rower for more than a month, empty the tank before storing.

Operation of Your Console

*ERG***550W** Console



Our computerized display console on the Water Rowing Machine allows the user to tailor a personalized workout by monitoring their progress. During a workout, the display console will alternately and repeatedly display the Time, Time/500M, SPM, Distance, Strokes, Total Strokes, Calories Burned and Pulse (all of the above).

Button Functions

UP / DOWN: Press these two buttons to scroll through available selection.
To adjust the function value upward and downward.

ENTER: Press to confirm your selection
During training, press the button to cycle scan each display function.

START / STOP: To start and stop your selected workout program.

RESET: To return the computer back to the main menu.
Press and hold to reset values.

Functions

TIME: Set a target time by pressing the UP and/or DOWN buttons (1min ~ 99 min), in 1 minute increments.

TIME / 500M: Your average time to reach 500 meters is automatically displayed.

SPM: Strokes per minute.

DISTANCE: Preset a target value by pressing the UP and/or DOWN buttons (0 ~ 99900 meters), 100 meters increments.

STROKES: Set a target value by pressing the UP and/or DOWN buttons (0~9990 strokes). 10 strokes increments.

TOTAL STROKES: Accumulates total strokes from 0 up to 9999.

CALORIES: Set a target value by pressing the UP and/or DOWN buttons (10~9990 Cal). 10 caloric increments.

PULSE: (Wireless chest strap sensor sold separately) - In Manual Mode, set the target heart rate value by pressing up/down (available range is 30 to 240 in 1 BPM increments). The computer will display user's heart rate during training. When you are out of range of the target value during exercise, the computer will beep and PULSE will blink until target range is resumed or wireless chest strap sensor is removed. The pulse measurement function is only usable with the optional wireless chest strap sensor.

WATT: Current workout watts with available range from 0 up to 999.

Operation of Your Console

1. Install 2 AA batteries (included) and computer will beep for 2 seconds (Fig.1).

2. The console will display the type for 2 seconds (Fig 2), then the console will prompt you to enter the Water Level (L1~L6), and the window displays the Water Level value and flash to indicate selection. (Fig 3).

3. The user can press up or down to select level. After confirming, the user will enter the training mode.(Fig 4)

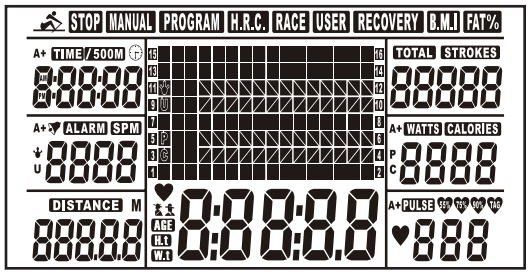

Fig.1

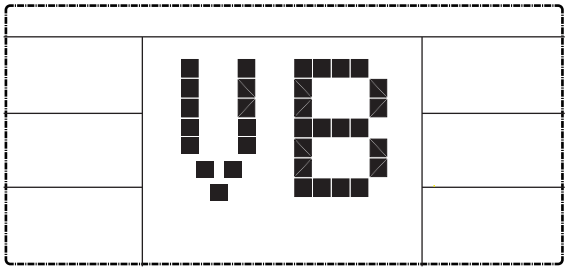

Fig.2

WATER LEVEL (LOAD)

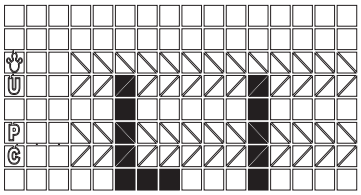

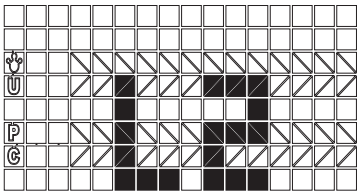

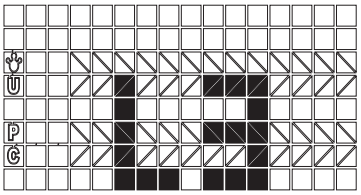

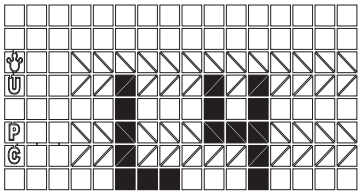

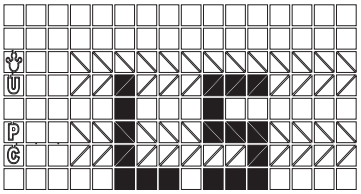

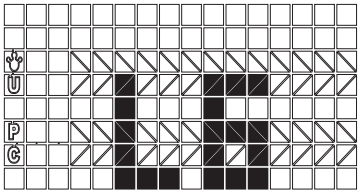

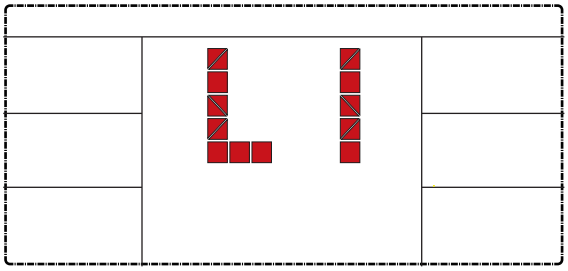

Fig.3

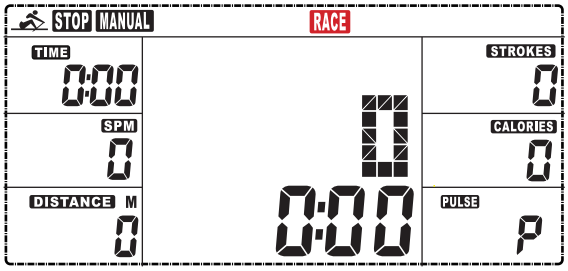

Fig.4

The menu at the top of the screen will blink to have you choose between MANUAL & RACE mode. Press UP or DOWN to select, then press ENTER and confirm your desired workout mode.

Operation of Your Console

1. **MANUAL** (**Fig.6)**: There are 2 options in MANUAL mode.

   A. The computer can be set to countdown a different value. When you select MANUAL, the value of TIME will start to flash. Press UP to set the value of TIME to countdown. Press ENTER to confirm it. If you do not want to set the value of time to COUNTDOWN, press ENTER to go to the next function.

   You can set the values for DISTANCE, STROKES, CALORIES, or PULSE. (You can only set the value for one function to countdown. For example, if you have set the target value for TIME, then DISTANCE can't be set.) Press START button to start.

   B. The STOP icon will disappear. When the function you have selected counts down to zero or you press STOP button, the computer will stop and display the average value. In the TIME/500M, SPM, WATTS, PULSE according to average displays the rest for training.

   C. The drag force value will display in the matrix.

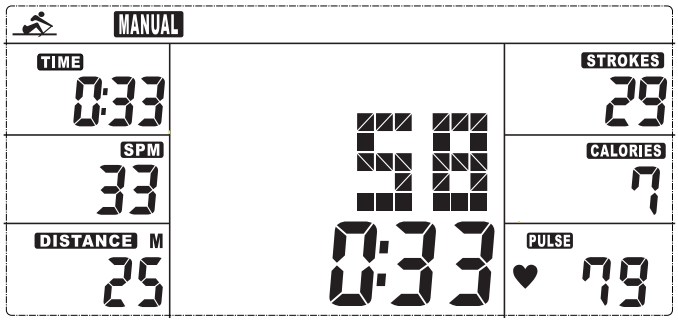

Fig. 5

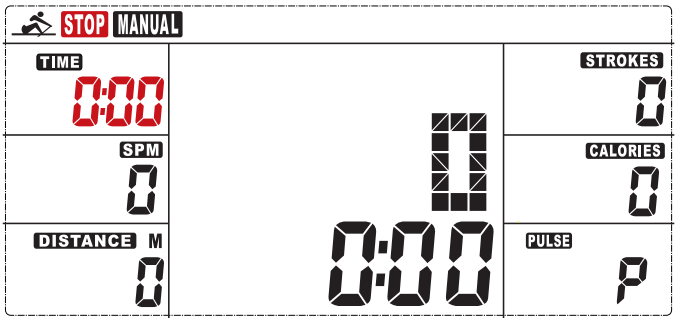

Fig. 6

2. **RACE (Fig.8)**:

   Select RACE mode and L9 will flash. The TIME/500M will display 4:00. Then, press UP or DOWN to select L1 ~ L15. Press ENTER to confirm.

   Then, you can set the distance of the race (500M~10000M) while the value of DISTANCE is blinking. Press ENTER and the picture of the race will display on the screen. The TIME/500M of the programs are as follows:

L1	L2	L3	L4	L5	L6	L7	L8	L9	L10	L11	L12	L13	L14	L15
8:00	7:30	7:00	6:30	6:00	5:30	5:00	4:30	4:00	3:30	3:00	2:30	2:00	1:30	1:00

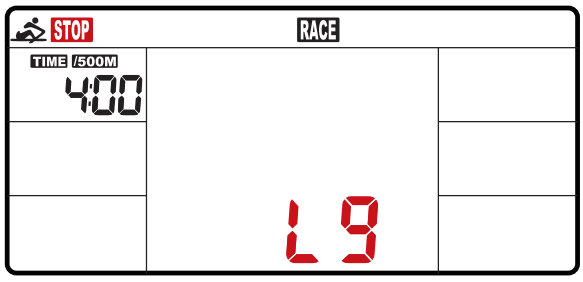

Fig. 7

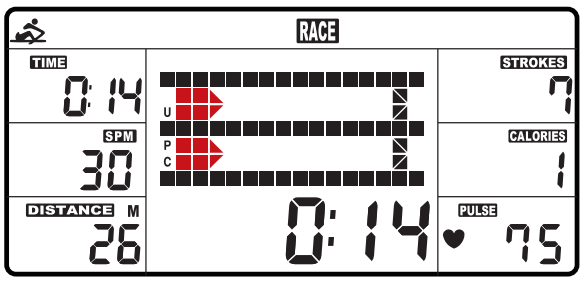

Fig. 8

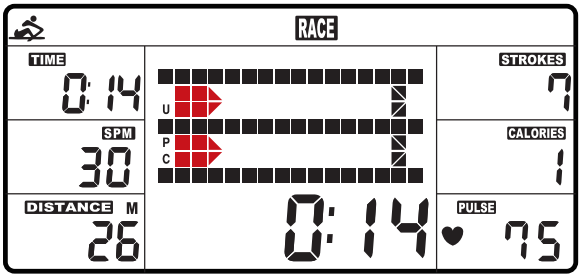

Fig. 9

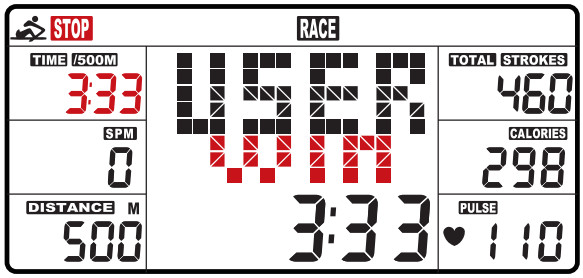

Fig. 10

A. Press START button to start and STOP will disappear. USER and PC will display in the matrix (Fig.9). The computer will stop when either user or computer has reached the race distance that was set. Then the matrix displays “PC WIN” or “USER WIN” (Fig.10).

B. When the race is over, you can press START to start a race once again. Press RESET to leave the RACE screen.

App Connection

This console connects to 3rd party fitness apps on your phone or tablet via Bluetooth. Once console is connected to your phone or tablet via Bluetooth, the console will not display. Your workout feedback will be displayed on your device.

Kinomap

1. Open the Kinomap App and click in the lower right corner to add devices.
2. Click equipment management, then click the “+” to start adding equipment.
3. Click the “Rowing” graphic, then scroll through brand connection screen to find and select FTMS or iConsole.
4. Select Rowing Machine, then Bluetooth device.
5. Press the Home Button to return to the Home screen after adding the device.
6. To select a training video, you must select the type of rowing and press the button to enter the training screen.
7. Start training, pressing the pause button at the top of the screen to stop.
8. From the pause screen you can continue the workout or exit to end the workout.

NOTE:
This machine is compatible with other 3rd party fitness apps using FTMS protocol.

Trouble Shooting

Problem	Cause	Solution
Monitor does not display	Batteries not Installed	Install Batteries
	Computer Wires not connected	Ensure the computer wires are connected properly at the upright and computer
No count or distance displays on the monitor	Sensor wire not connected	Ensure the computer wires are connected properly at the upright and the computer
	Sensor wire not working properly	Replace sensor wire
	Monitor not working properly	Replace monitor
Squealing	Belt slipping	Adjust Belt

Manufacturer's Limited Warranty

Effective January 1, 2023 - ROWER LIMITED WARRANTY

XTERRA Fitness Inc. warrants all its home use Rower parts for a period of time listed below, from the date of retail sale, as determined by a sales receipt or in the absence of a sales receipt, eighteen (18) months from the original factory shipping date. XTERRA Fitness' responsibilities include providing new or remanufactured parts, at XTERRA Fitness' option, and technical support to our independent dealers and servicing organizations. In the absence of a dealer or service organization, these warranties will be administered by XTERRA Fitness directly to a consumer. The warranty period applies to the following components:

Home Use Limited Warranty	
Frame	Parts
3 Years	1 Year

NORMAL RESPONSIBILITIES OF THE CONSUMER

This warranty applies only to products in ordinary household use. The consumer is responsible for the items listed below:

1. The warranty registration card must be completed and returned to the address listed on the card within 10 days of the original purchase to validate the manufacturer's limited warranty or register online at the XTERRA Fitness website.
2. Proper use of the Rower in accordance with the instructions provided in this manual, including maintenance.
3. Proper connection to a power supply of sufficient voltage, replacement of blown fuses, repair of loose connections or defects in house/facility wiring.
4. Expenses for making the Rower accessible for servicing, including any item that was not part of the Rower at the time it was shipped from the factory.
5. Damages to the Rower finish during shipping, installation or following installation.

EXCLUSIONS

This warranty does not cover the following:

1. CONSEQUENTIAL, COLLATERAL, OR INCIDENTAL DAMAGES SUCH AS PROPERTY DAMAGE AND INCIDENTAL EXPENSES RESULTING FROM ANY BREACH OF THIS WRITTEN OR ANY IMPLIED WARRANTY. Note: Some states do not allow the exclusion or limitation of incidental or consequential damages, so this limitation or exclusion may not apply to you.
2. Service call reimbursement to the consumer. Service call reimbursement to the dealer that does not involve malfunction or defects in workmanship or material, for units that are beyond the warranty period, for units that are beyond the service call reimbursement period, for Rowers not requiring component replacement, or Rowers not in ordinary household use.
3. Damages caused by services performed by persons other than authorized XTERRA Fitness service companies, use of parts other than original XTERRA Fitness parts, or external causes such as alterations, modifications, abuse, misuse, accident, improper maintenance, inadequate power supply, or acts of God.
4. Products with original serial numbers that have been removed or altered.
5. Products that have been; sold, transferred, bartered, or given to a third party.
6. Products that are used as store display models.
7. Products that do not have a warranty registration on file at XTERRA Fitness Inc. XTERRA Fitness reserves the right to request proof of purchase if no warranty record exists for the product.
8. Product use in any environment other than a residential setting.
9. THIS WARRANTY IS EXPRESSLY IN LIEU OF ALL OTHER WARRANTIES EXPRESSED OR IMPLIED, INCLUDING THE WARRANTIES OF MERCHANTABILITY AND/OR FITNESS FOR A PARTICULAR PURPOSE.

SERVICE

Keep your bill of sale. Twelve (12) months from the date on the bill of sale or eighteen (18) months from the date of factory shipping as determined by the serial number establishes the warranty period should service be required. If service is performed, it is in your best interest to obtain and keep all receipts. This written warranty gives you specific legal rights. You may also have other rights that vary from state to state. Service under this warranty must be obtained by following these steps, in order:

1. Contact your selling authorized XTERRA Fitness dealer. OR
2. Contact your local authorized XTERRA Fitness service organization.
3. If there is a question as to where to obtain service, contact our service department at (870)333-5500
4. XTERRA Fitness' obligation under this warranty is limited to repairing or replacing, at XTERRA Fitness' option, the product through one of our authorized service centers. All repairs must be preauthorized by XTERRA Fitness. If the product is shipped to a service center freight charges to and from the service center will be the customer's responsibility. For replacement parts shipped while the product is under warranty, the customer will be responsible for shipping and handling charges. For in-home service, the customer will be responsible for a trip charge. There will be an additional trip charge if the customer is located over 100 miles from the nearest service center.
5. The owner is responsible for adequate packaging upon return to XTERRA Fitness. XTERRA Fitness is not responsible for damages in shipping. Make all freight damage claims with the appropriate freight carrier. DO NOT SHIP ANY UNIT TO OUR FACTORY WITHOUT A RETURN AUTHORIZATION NUMBER. All units arriving without a return authorization number will be refused.
6. For any further information, or to contact our service department by mail, send your correspondence to:

XTERRA Fitness, Inc.
P.O. Box 2037
Jonesboro, AR 72402-2037

Product features or specifications as described or illustrated are subject to change without notice. All warranties are made by XTERRA Fitness, Inc. This warranty applies only in the 48 contiguous United States. NOTE: This does not include Alaska or Hawaii.

Exploded View

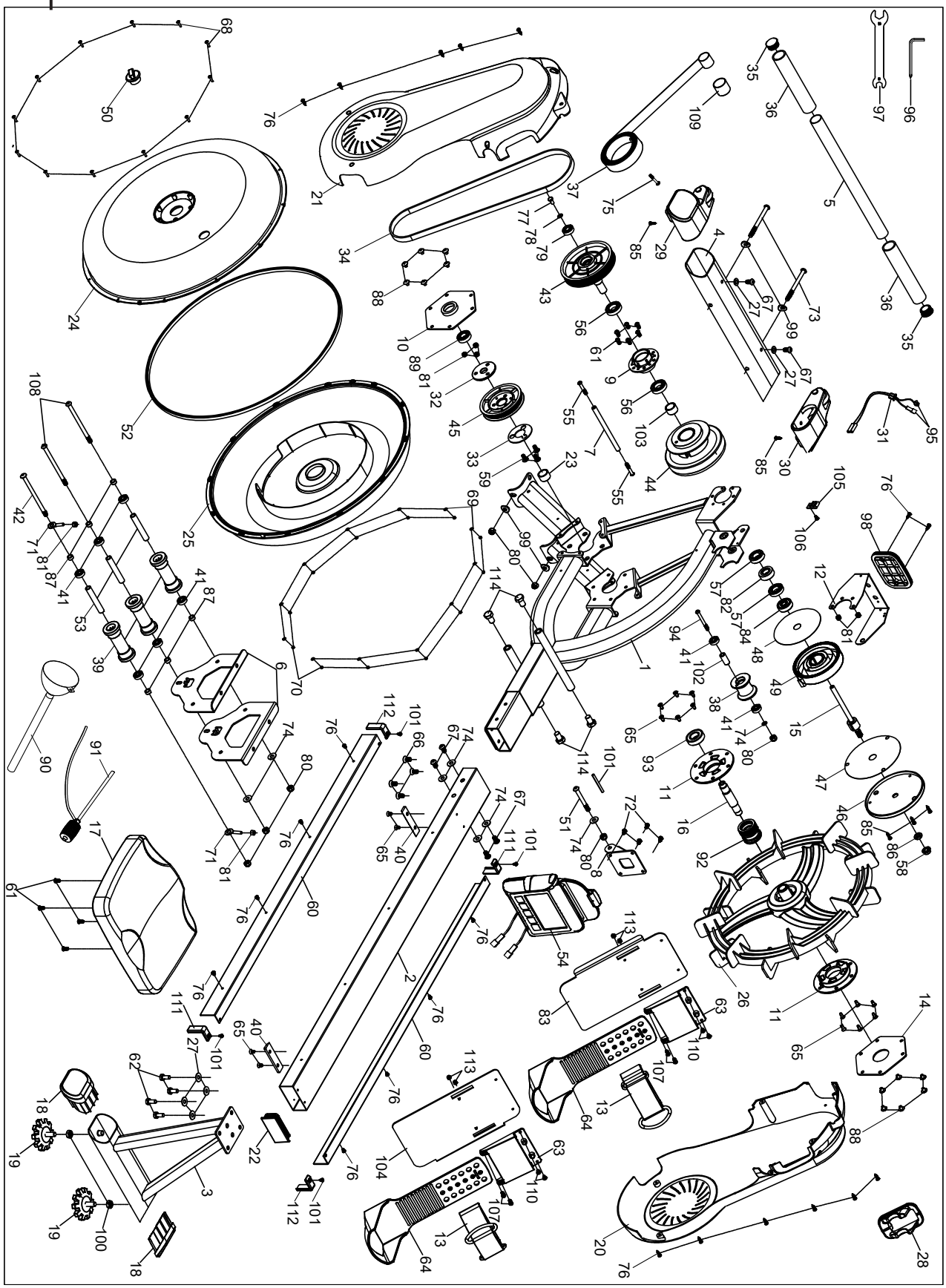

Parts List

No.	Description	Spec.	QTY
1	Main Frame		1
2	Slide rail		1
3	Rear Stabilizer		1
4	Front Stabilizer		1
5	Handle Bar		1
6	Seat Plate		2
7	Iron Bushing	CRS,Φ10*139.5	1
8	Console Bracket	Black	1
9	Spring Shaft		1
10	Hex-Shaped Bearing Plate		1
11	Bearing Plate	POM	2
12	Cover Plate		1
13	Pedal Strap		2
14	Water Tank Bracket		1
15	Axle		1
16	Impeller Shaft	40Gr	1
17	Seat	PU,Black	1
18	Rear Stabilizer End Cap	PP	2
19	Adjustable Floor Stabilizer	TPR	2
20	Chain cover R	HIPS,Black	1
21	Chain cover L	HIPS,Black	1
22	Square end cap	PVC,Black	1
23	Spacer for Water Tank	Φ25*20*16	1
24	Upper Tank	PC	1
25	Lower Tank	PC	1
26	Impeller	PP	1
27	Flat washer	OD16*ID8.5*T1.5	6
28	Handle Bar Cover	TPR	1
29	Left Front Stabilizer End Cap	PP	1
30	Right Front Stabilizer End Cap	PP	1
31	Wire Bushing	PVC Black	2
32	Pulley Plate A	CRS	1
33	Pulley Plate B	HR,H2.0*65*63	1
34	Belt	VEGA, PJ41"	1
35	Handle Bar End Cap	PP Black	2
36	Handle Bar Sleeve	Φ33*3*265	2
37	Braid	Black	1
38	Belt Wheel	POM,Black	1

39	Seat roller	POM,Black	3
40	Limit pad	Rubber,black	2
41	Bearing	608ZZ	8
42	Hex Socket Bolt	M8*130	1
43	Pulley		1
44	Drawstring pulley	ABS black	1
45	Pulley Set	Black	1
46	Volute spring cover	ABS	1
47	Soundproof board A	PC	1
48	Soundproof board B	PC	1
49	Volute spring	5M	1
50	Fill Plug	Rubber,black	1
51	Hex Socket Round Head Screw	M8*65	1
52	Rubber Sealing Ring	Rubber,black	1
53	Bushing for seat roller	PP,Black	3
54	Console	ST-58088	1
55	Hex Socket Round Head Screw	M6*35	2
56	Bearing	6904ZZ	2
57	Bearing	16003ZZ	2
58	Flange Nut	M10*P1.0	1
59	Hex Socket Flat Head Screw	M6*16	3
60	Aluminum Plate	L925*W27.5*H42*2.0	2
61	Hex Socket Round Head Screw	M6*15	10
62	Hex Bolt	M8*10	4
63	Pedal Upper	PP,Black	2
64	Pedal Lower	PP,Black	2
65	Hex Socket Screw	M6*10	16
66	Hex Socket Screw	M8*15	4
67	Hex Socket Round Head Screw	M8*15	6
68	Hex Socket Screw	M4*18	12
69	Magnet	OD10*2	2
70	Flange Nut	M4	12
71	Adjusting screw	M6*35	2
72	Hex Socket Round Head Screw	M5*15	4
73	Hex Socket Round Head Screw	M8*95	2
74	Flat washer	OD20*ID8.5*T1.5	7
75	Cross-head screw	M5(Φ9)*35	1
76	Self-tapping screw	ST4*16	19
77	Hex Bolt	M6*15	1

78	Flat washer	OD13*ID6.5*T1.5	1
79	Bushing	6000ZZ	1
80	Nylon Hex Nut	M8	7
81	Nylon Hex Nut	M6	7
82	One way bearing	HF2016	1
83	Pedal Plate L		1
84	Bushing	6300ZZ	1
85	Self-tapping screw	ST4*19	5
86	Nylon Nut	M10*P1.0*H5	1
87	Spacer for Seat Roller	Φ12.7*Φ8.2*7	6
88	Self-tapping screw	ST5.0*15	12
89	Bushing	6002ZZ	1
90	Funnel		1
91	Siphon Pump		1
92	Lower Bearing Seat	Φ28	1
93	Bushing	6004ZZ	1
94	Hex Socket Round Head Screw	M8*60	1
95	Sensor wire	Φ6*25mm	1
96	Allen Wrench with Phillips Screwdriver	§5*5	1
97	Open Wrench	L180*T4.0mm13-19#	1
98	Plastic Cushion	TPR,Black	1
99	Curved Washer	OD20*ID8.5*T1.5	4
100	Hex Nut	M10	2
101	Self-tapping screw	ST4*8	4
102	Spacer for Roller	OD12.7*ID8.1*28	1
103	Spacer for mesh belt wheel	25*20.2*13	1
104	Pedal Plate R		1
105	Magnet bracket	Black	1
106	Cross pan head screw	M4*8Φ8	1
107	Hex Socket Round Head Screw	M5*8	4
108	Hex Socket Bolt	M8*125	2
109	Bushing For Handle Bar	L24mm	1
110	Cross-head screw	M5*15	4
111	Stop Brackets L	PP,Black	2
112	Stop Brackets R	PP,Black	2
113	Nut	M5	4
114	Hex Bolt	M12*18	4
115	Self-tapping screw	ST4.28*16	2
	Hardware package		1

3000 Nestle Road Jonesboro, AR 72401 - Phone:870-333-5500 - Fax:870-935-7611

©2022 All RIghts Reserved.