XTERRA® FITNESS™

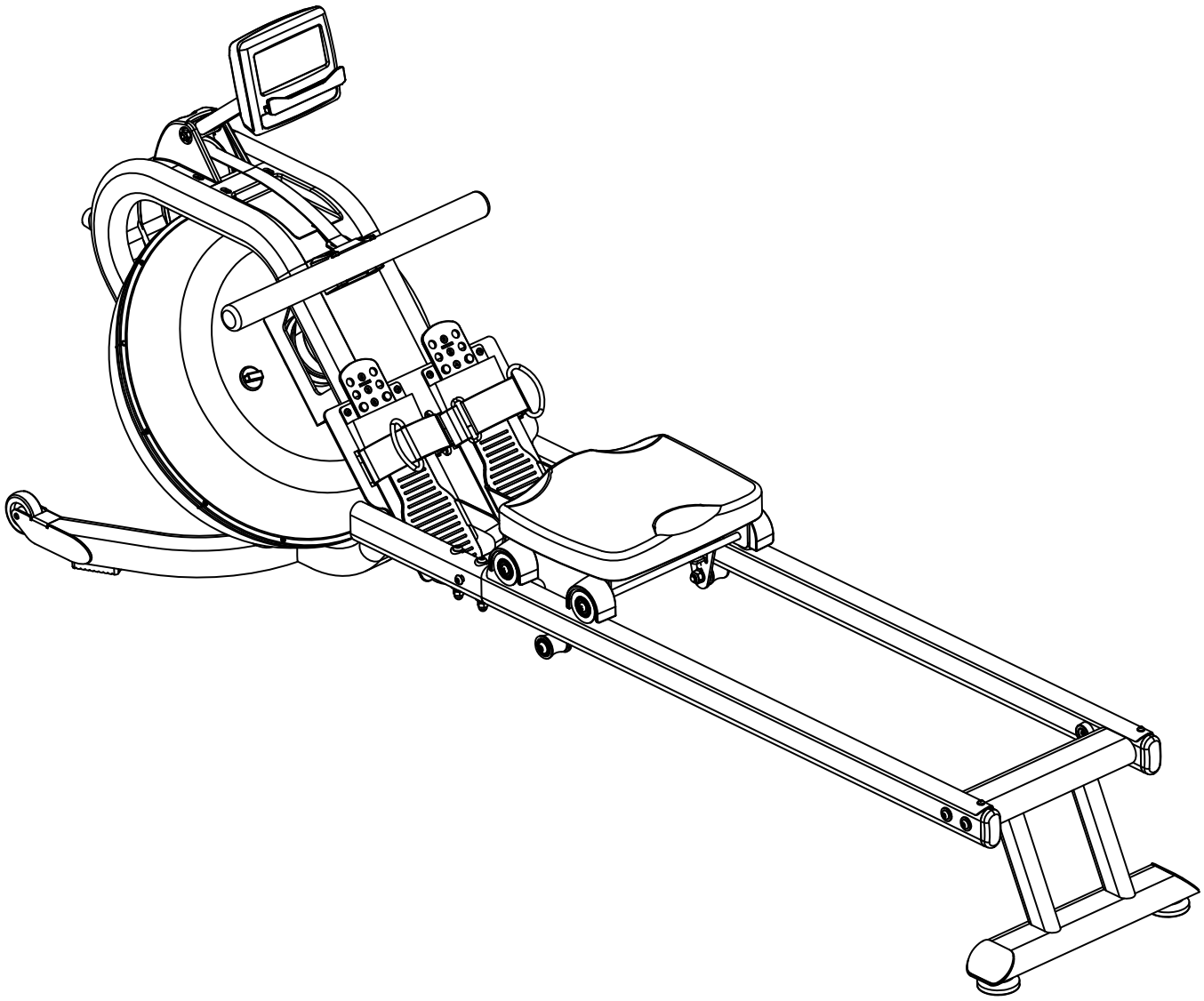

ERG**650W** Water Rowing Machine
OWNER'S MANUAL

PLEASE CAREFULLY READ THIS ENTIRE MANUAL BEFORE OPERATING YOUR NEW ROWER

Congratulations On Your New Rower and Welcome to the XTERRA Fitness Family!

Thank you for your purchase of this quality rower from **XTERRA Fitness**. Your new rower has been manufactured by one of the leading fitness manufacturers in the world. **XTERRA Fitness** will do all we can to make your ownership experience as pleasant as possible for many years to come. If you have questions, or if parts are missing or damaged, or you require customer service, call (870) 333-5500. Please have your model number and serial number handy when you call.

Please take a moment to record where you purchased your machine, as well as the date of purchase for future reference. We appreciate your confidence in **XTERRA Fitness** and we will always remember that you are the reason that we are in business. Please complete and mail your registration card today and enjoy your new rower.

Yours in Health,
XTERRA Fitness

Table Of Contents

Product Registration	**1**
Important Safety Instructions	**2**
ERG650W Assembly Instructions	**4**
Fill and Empty the Tank	**10**
Adjustment and Storage Guides	**11**
Console Operation	**13**
Manufacturer’s Limited Warranty	**18**

Product Registration

Purchase Location _____

Purchase Date _____

Record Your Serial Number
Please record the Serial Number of this fitness product in the space provided below.

Serial Number

_____

Register Your Purchase
The self-addressed product registration card must be completed in full and returned to **XTERRA Fitness**. You can also go to ***www.xterrafitness.com/warrantyreg.html*** to register online.

ATTENTION

THIS ROWER IS INTENDED FOR **RESIDENTIAL USE ONLY** AND IS WARRANTED FOR THE APPLICATION. ANY OTHER APPLICATION **VOIDS** THIS WARRANTY IN ITS ENTIRETY.

Important Safety Instructions

When using an appliance, basic precautions should always be followed, including the following:

Read all instructions before using this appliance.

WARNING - To reduce the risk injury to persons:

1. Do not operate under blanket or pillow.
2. Operate the machinery with ample free space around it to easily get on and off the machine.
3. This exercise equipment is not intended for use by persons with reduced physical, sensory or mental capabilities, or lack of experience and knowledge.
4. Keep children and pets away from the machine at all times. DO NOT leave children unattended in the same room with the machine.
5. Use this appliance only for its intended use as described in this manual. Do not use attachments not recommended by the manufacturer.
6. Never operate this appliance if it is not working properly, if it has been dropped or damaged, or dropped into water. Return the appliance to a service center for examination and repair.
7. Keep the appliance away from heated surfaces.
8. Never operate the appliance with the air openings blocked. Keep the air openings free of lint, hair, and the like.
9. Never drop or insert any object into any opening.
10. Do not use outdoors.
11. Do not operate where aerosol (spray) products are being use or where oxygen is being administered.
12. The appliance is intended for household use.
13. After assembly, make sure to tighten all nuts and bolts.



WARNING: This product can expose you to chemicals including Toluene and Acrylamide which are known to the State of California to cause cancer and birth defects or other reproductive harm.
For more information go to www.P65Warnings.ca.gov

Fitness Equipment Safety Instructions

- Do not operate equipment on deeply padded, plush or shag carpet. Damage to both carpet and equipment may result.
- Before beginning this or any exercise program, consult a physician. This is especially important for persons over the age of 35 or persons with pre-existing health conditions.
- Keep hands away from all moving parts.
- Do not attempt to use your equipment for any purpose other than for the purpose it is intended.
- Wear proper shoes. High heels, dress shoes, sandals or bare feet are not suitable for use on your equipment. Quality athletic shoes are recommended to avoid leg fatigue.
- Wear proper clothing for exercising, loose clothing could become caught in the machine.
- Only one person at a time should use the machine.
- If the user experiences dizziness, nausea, chest pain, or any other abnormal symptoms, STOP the workout at once. CONSULT A PHYSICIAN IMMEDIATELY.
- Do not place any sharp object around the machine.
- Always use caution when moving and storing your equipment.
- User Weight Limit: 350 LBS

Failure to follow all guidelines may compromise the effectiveness of the exercise experience, expose yourself (and possibly others) to injury, and reduce the longevity of the equipment.

SAVE THESE INSTRUCTIONS - THINK SAFETY!

CAUTION!! Please be careful when unpacking the carton.

Before you begin

Thank you for selecting our revolutionary XTERRA ERG650W Water Rowing Machine. A rower is an effective exercise for increasing cardiovascular fitness, building endurance, and toning the body. Our Water Rowing Machine provides an impressive selection of features designed to make your workouts at home more effective and enjoyable.

For your benefit, read this manual carefully before you use the ERG650W Water Rowing Machine. To help us assist you, note the product model number and serial number before contacting us. Before reading further, please familiarize yourself with the parts that are labeled in the drawing below.

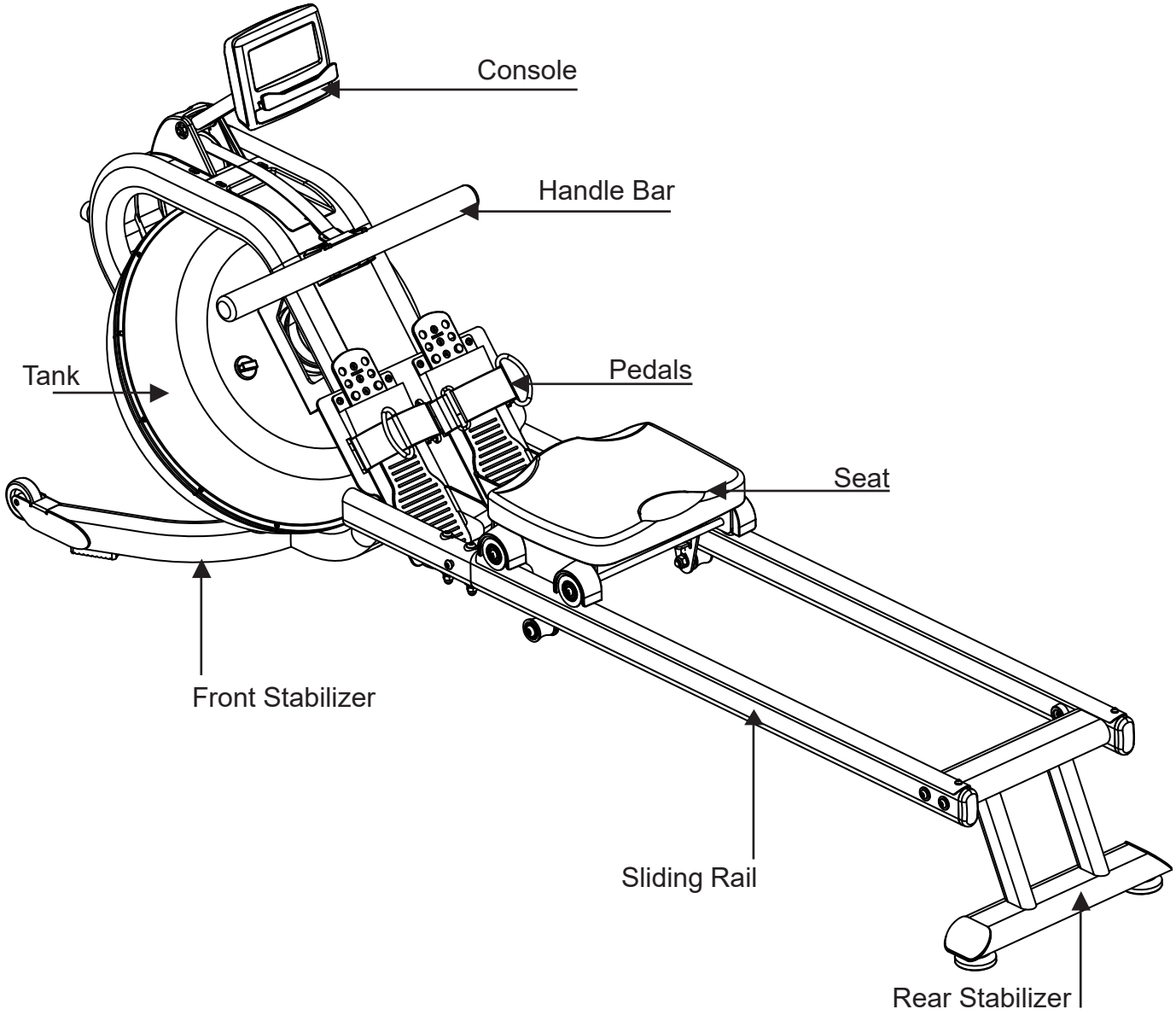

ERG**650W** Assembly Part Checklist

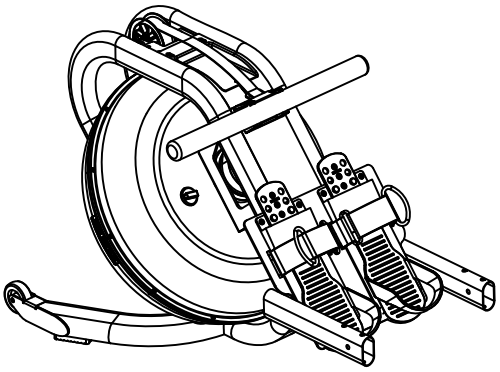

NO.1

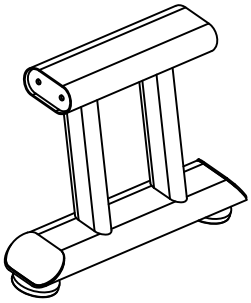

NO.2

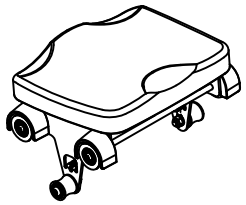

NO.38

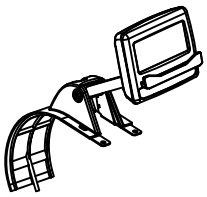

NO.54

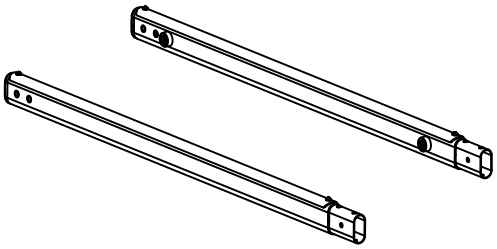

NO.3R L

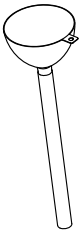

NO.52



NO.53

ERG**650W** Assembly Part Checklist

Part No	Description	Q'ty
1	Main Frame	1
2	Rear Stabilizer	1
3R/3L	Slide Rail	1/1
38	Seat Assembly	1
54	Computer Assembly	1
52	Funnel	1
53	Pumping Siphon	1
	User Manual	1
	Hardware Parts	1

Note: Above parts are all needed to assemble this machine. Before you start to assemble, please check the hardware packing to make sure they are included.

ERG**650W** Assembly Pack Checklist

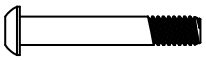

63 M8*45 4pcs



#65 M6*15 6pcs



#68 M8*15 4pcs

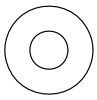

#74 OD20*ID8.5*1.5 4pcs

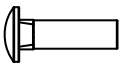

77 M8*27 2pcs



#93 S5 1pc

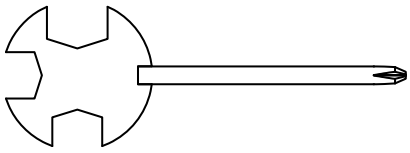

#94 S13-17 1pc

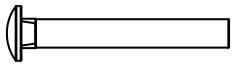

99 M8*57 4pcs

ERG**650W** Assembly Instructions

1 Slide Rails and Rear Stabilizer

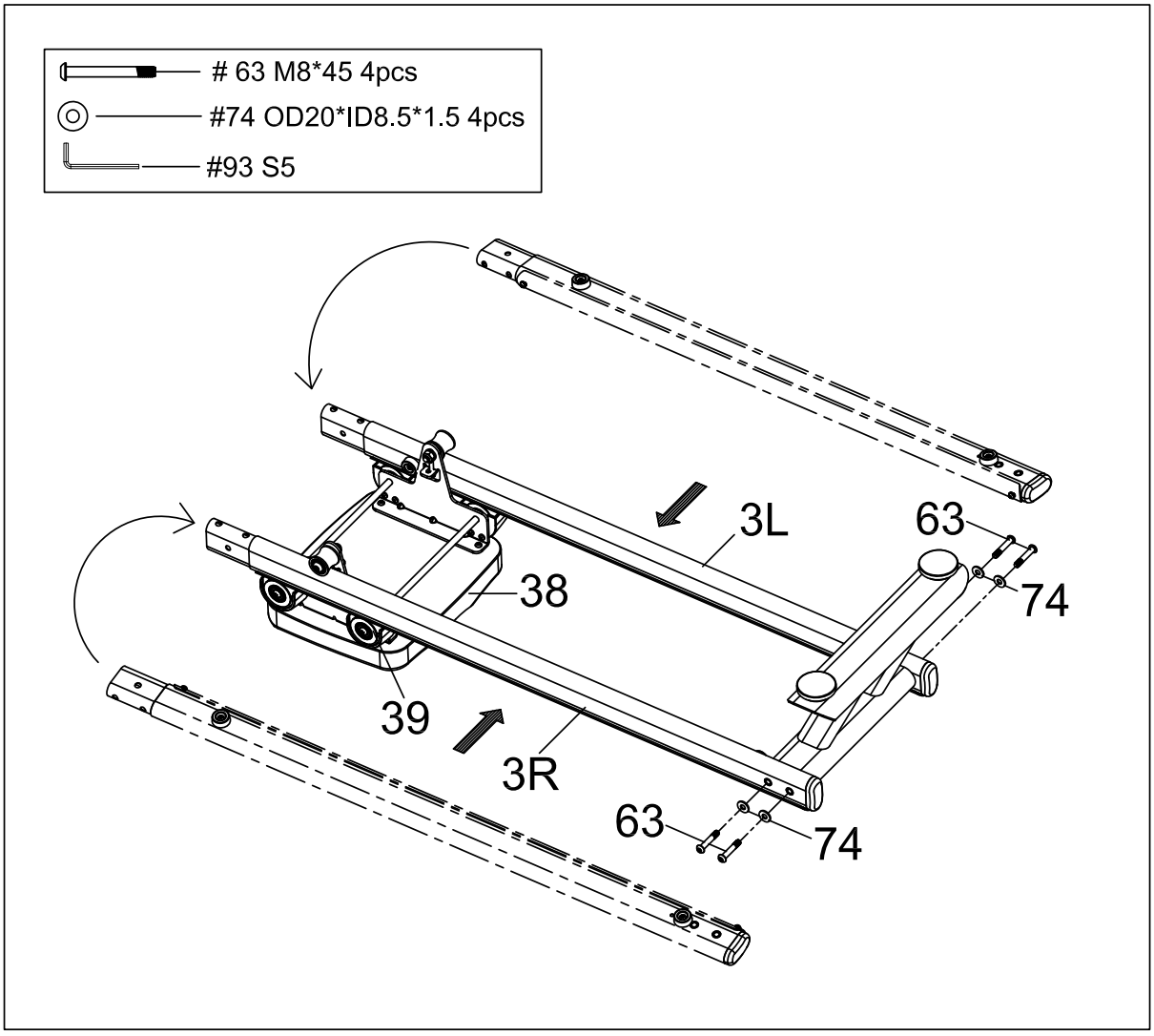

1. Turn over the **Slide Rail (No. 3)** as above. Attach the Seat's **Rollers (No. 39)** to the Slide Rail making sure the plate touches the rollers. To secure the Slide Rails between the Rollers, you'll need to insert it at an angle and rotate as shown above.
2. Secure the **Rear Stabilizer (No. 2)** to the **Slide Rails (No. 3)** using 2 **Screws (No. 74)** and 2 **Washers (No. 63)** on both sides.

2 Connecting the Slide Rail to the Main Body

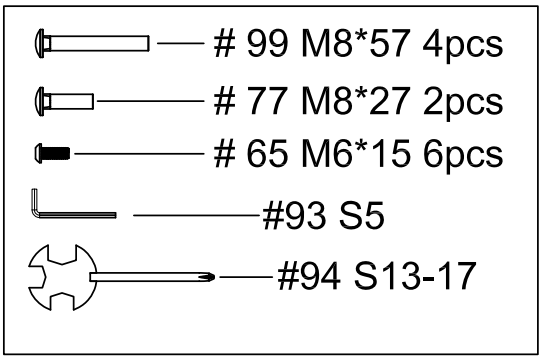

Note: We recommend having two people help during the next step in assembly - especially someone to prevent the seat from sliding down.

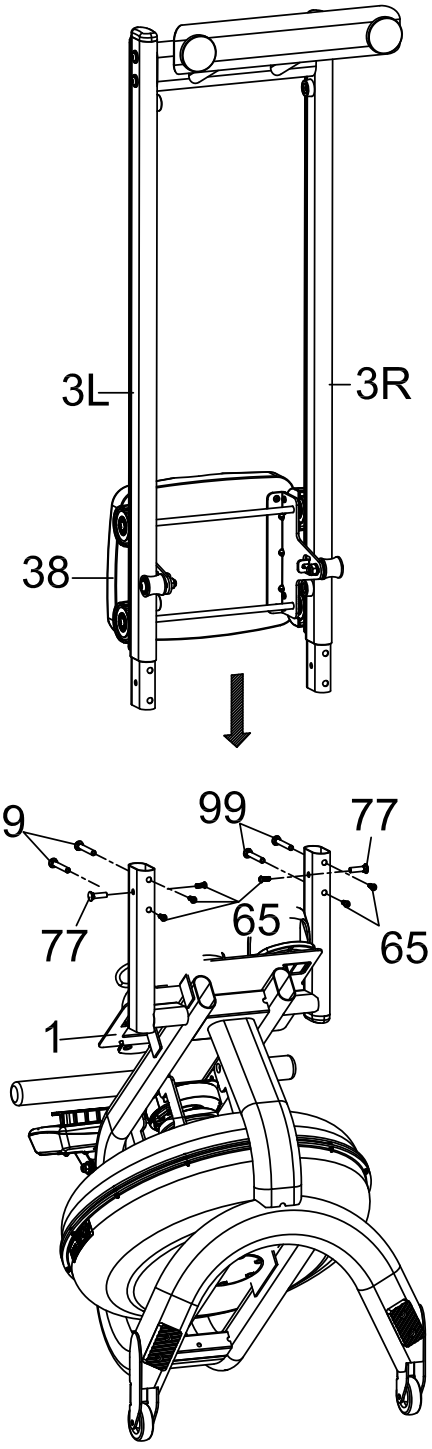

1. Standing the Main Frame (No. 1), attach the Slide Rail (No. 3). Tighten using 4 **Long Screws (No. 99)** on the “Top” or seat side of Frame, 2 **Medium Screws (No. 77)** on the “Outer Sides” of the Frame, and 6 **Short Screws (No. 65)** along the “Bottom” and “Inner Side” of the Frame.

3 Attaching the Console

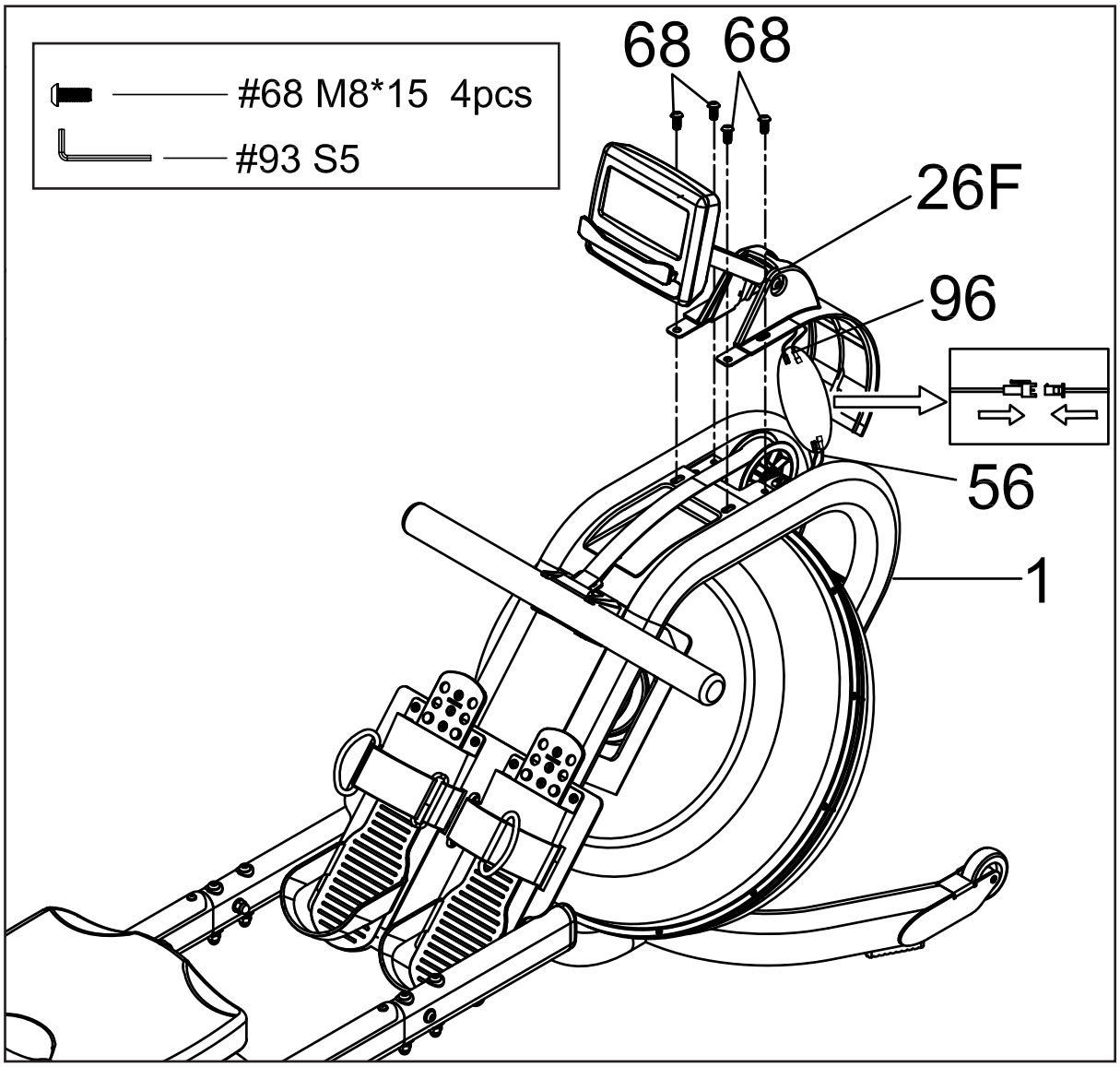

1. Place the 2 AA batteries into the **Console (No. 54)**.
2. Turn the **Main Frame (No. 1)** upright. Connect the **Sensor Wire (No. 56)** to the **Connection Wire (No. 96)**. Be careful not to pinch the wires. Feed any extra length of wire to lay in the Main Frame.
3. Plug the **Decorative Cover (No. 26)** into the **Main Frame (No. 1)**.
4. Secure the **Console (No. 54)** to the Main Frame using 4 **Small Screws (No. 68).**

How to Fill and Empty the Tank

1. Remove the **Fill Plug (No. 50)** from the **Upper Tank (No. 24)**.

2. To fill tank with water, refer to Fig. A. Insert the **Funnel (No. 52)** into the tank, then use a cup or the **Siphon Pump (No. 53)** and a bucket to fill the tank. Use the water level gauge on the side of the tank to measure desired water level in the tank.

3. To empty the tank, refer to Fig. B. Place a bucket next to the rower, and use the **Siphon Pump (No 53)** to pump out the water from the tank into the bucket.

4. Insert the **Fill Plug (No. 50)** into the **Upper Tank (No. 24)**. Wipe excess water off of the frame.

NOTE:

- Fill the tank only with tap water. Never use pool chlorine or chlorine bleach. This will damage the tank and void the warranty.

- Water from the tank is not suitable for consumption. Dispose the water after pumping it out from the tank.

- To extend the life of your rower and prolong use between tank cleanings, please purchase water cleaning tablets at www.xterrafitness.com, or by calling 1-(870) 333-5500.

WATER LEVEL

- See Fig. A. The water level gauge is on the side of the tank. The maximum fill level is 6. Never fill it over this limit. Filling the tank over this limit will void the warranty.

- The resistance depends on the water level in the tank.
  Water level 1 is the lowest resistance. Level 6 is the highest resistance.

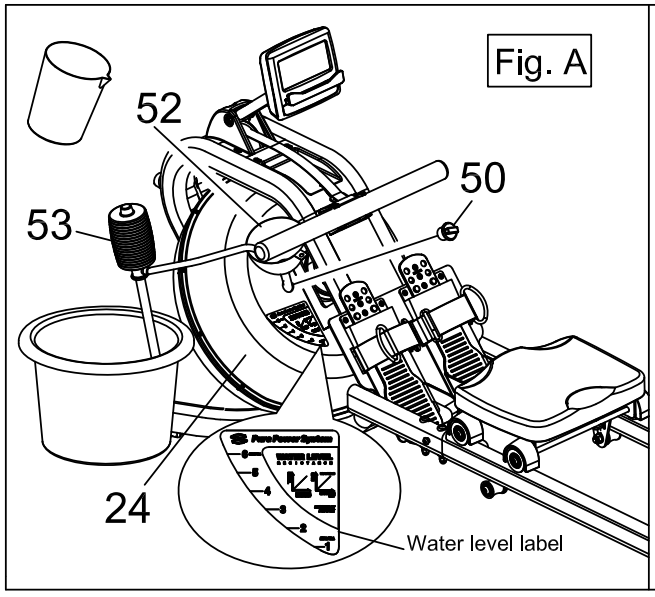

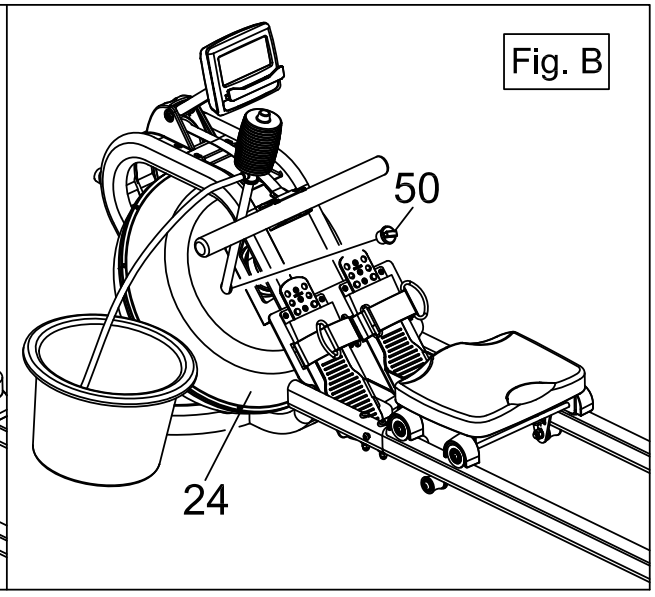

Adjustment Guide and Storage

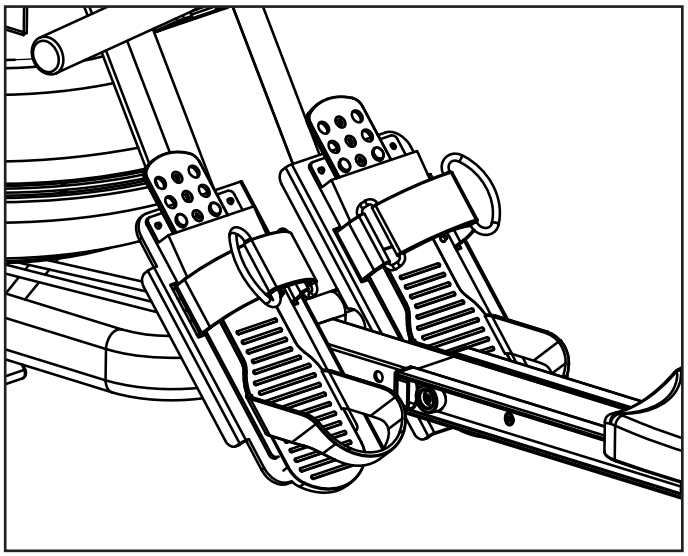

The pedal strap is adjustable and can be personalized to fit the user's foot size.

To adjust the pedal strap, remove the hook and loop end of the strap from the mesh side by pulling it upward and over to the side.

Once removed, you may increase the opening of the pedal strap by pulling the mesh end up and to the side.

To tighten, pull the hook and loop end of the pedal strap upward then over and down to secure it to the mesh side of the strap.

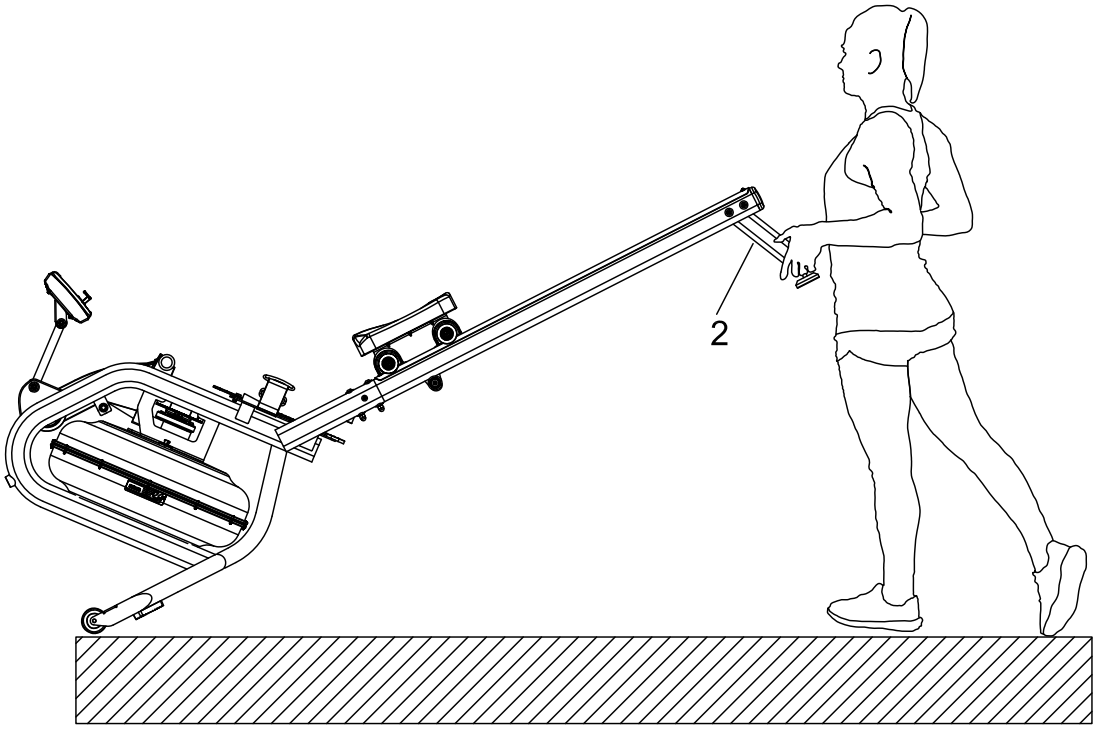

To move the machine, lift up the rear stabilizer until the transportation wheels on the front stand touch the ground. With the wheels on the ground, you can transport the rower to the desired location with ease.

Adjustment Guide

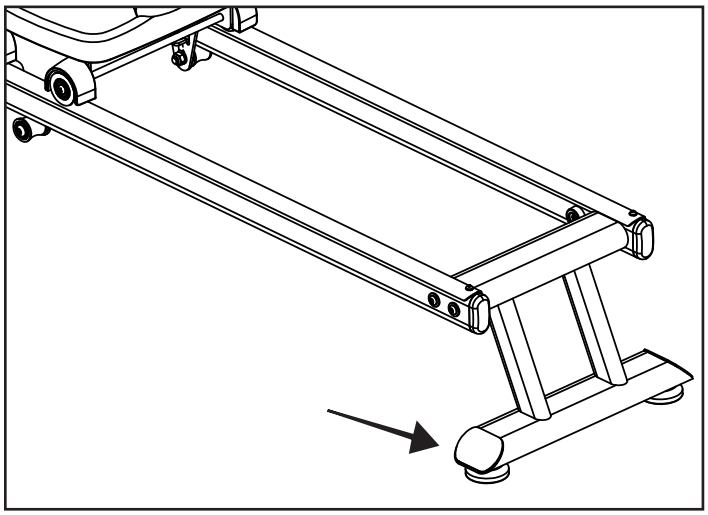

Adjusting the Balance

Adjust the rear feet if the machine is out of balance.

CAUTION!

Moving parts, such as the seat, can crush and cut. Keep hands clear of the Slide Rail during use.

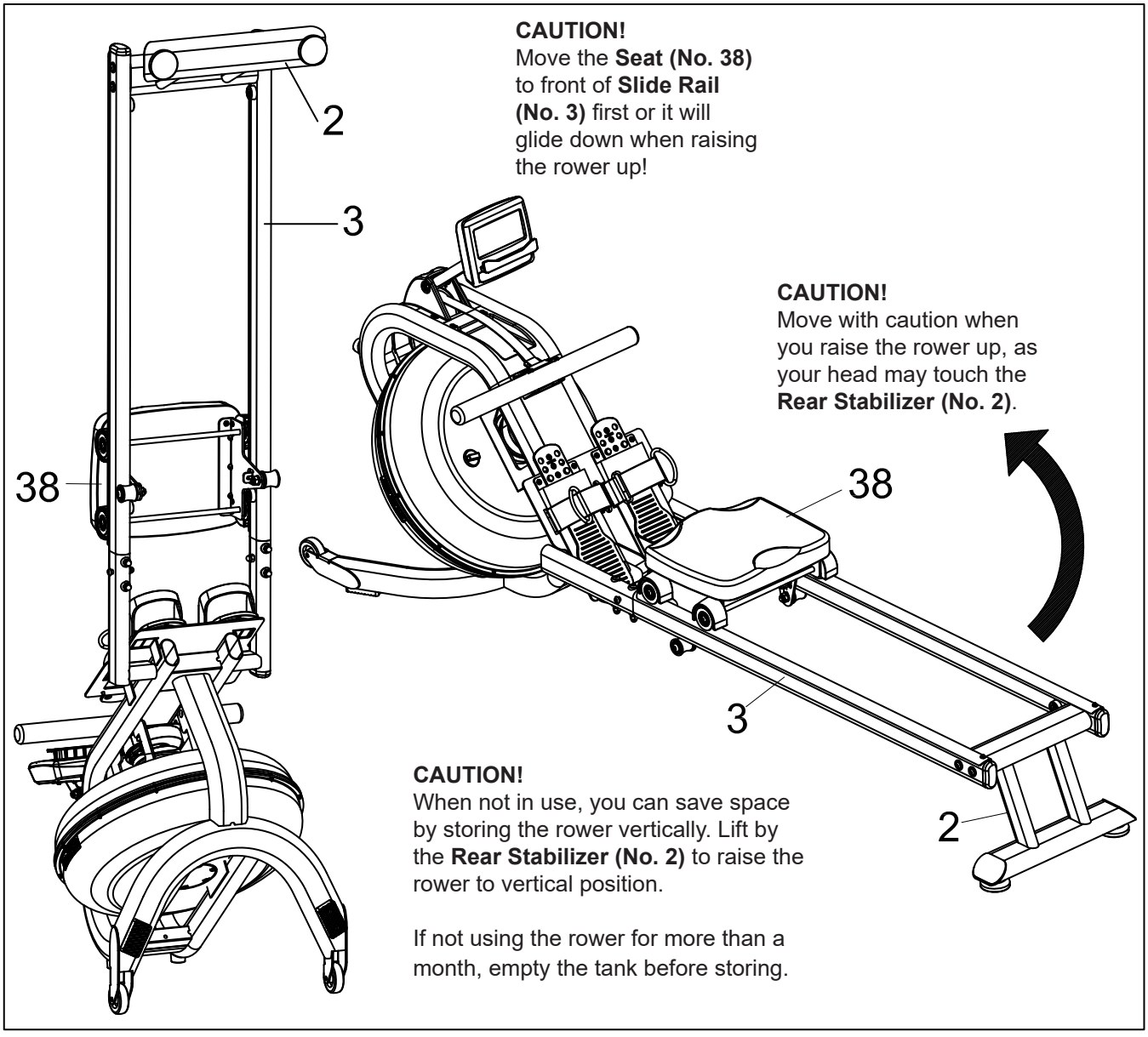

CAUTION!
Move the **Seat (No. 38)** to front of **Slide Rail (No. 3)** first or it will glide down when raising the rower up!

CAUTION!
Move with caution when you raise the rower up, as your head may touch the **Rear Stabilizer (No. 2)**.

CAUTION!
When not in use, you can save space by storing the rower vertically. Lift by the **Rear Stabilizer (No. 2)** to raise the rower to vertical position.

If not using the rower for more than a month, empty the tank before storing.

Operation of Your Console

ERG**650W** Console



The full LCD display will be shown 2 seconds after installing the batteries. All fields will activate briefly. The console will then prompt you to enter the Workout Intensity Level (this is determined by how much water you've filled the tank with) from L1 to L6, using the **Arrow Keys** to lower/raise the level. The default level is L6. Afterwards, press **ENTER** to confirm your Workout Intensity Level. The console will then enter into Standby mode.

Button Functions

UP / DOWN: Press these two buttons to scroll through available selection.
To adjust the function value upward and downward.

ENTER: Press to confirm your selection. To access the different workout programs.
During training, press the button to cycle scan each display function.

START / STOP: To start and stop your selected workout program.

RESET: To return the computer back to the main menu.
Press and hold to reset values.

RECOVERY: To activate the RECOVERY PROGRAM that will automatically evaluate your fitness immediately after your work out.

Functions

TIME: Set a target time by pressing the UP and/or DOWN buttons (1min ~ 99 min), in 1 minute increments.

TIME / 500M: Your average time to reach 500 meters is automatically displayed.

SPM: Strokes per minute.

DISTANCE: Preset a target value by pressing the UP and/or DOWN buttons (0 ~ 99900 meters), 100 meters increments.

STROKES: Set a target value by pressing the UP and/or DOWN buttons (0~9990 strokes). 10 strokes increments.

TOTAL STROKES: Accumulates total strokes from 0 up to 9999.

CALORIES: Set a target value by pressing the UP and/or DOWN buttons (10~9990 Cal). 10 calorie increments.

PULSE: (Wireless chest strap sensor sold separately) - In Manual Mode, set the target heart rate value by pressing up/down (available range is 30 to 240 in 1 BPM increments). The computer will display user's heart rate during training. When you are out of range of the target value during exercise, the computer will beep and PULSE will blink until target range is resumed or wireless chest strap sensor is removed. The pulse measurement function is only usable with the optional wireless chest strap sensor.

DRAG FORCE: Displays the current Drag Force.

WATT: Displays the current Watt output.

A+: Display the average function value of time, calories, watt and pulse.

Programs

QUICK START:
Choose Quick Start then press START/STOP to start the training. Press ENTER to switch between values during your workout. The program profile displays 16 columns, each equal to 100 meters.

STANDARD:
Choose Standard, then press ENTER to confirm and begin your desired training mode: 2000m, 5000m, 10000m, 30:00, 500m/1:00. Press START to begin the program. The preset value will count down to 0, other values (calories, strokes, etc.) will count up. Pressing RESET will bring you back to standby mode and all values will reset to 0.

TARGET SINGLE:

Choose Target Single then press ENTER to confirm and choose one of four values to target.

Single Time - Presets only a time value. Press Start to begin the workout.

Single Distance - Presets only a distance value. Press Start to begin the workout.

Single Calories - Presets only a Caloric value. Press Start to begin the workout.

Single THR - Presets only a Target Heart Rate. Ranges from 90 - 200 BPM. Press Start to begin the workout. If you exceed the THR, a beeping sound will occur. Only usable with a Wireless chest strap.

TARGET INTERVALS:

Choose Target Interval then press ENTER to confirm and choose one of three values to set an Interval target for.

Interval Time - Using the Arrow Keys, set a training time. Press ENTER and set a rest time. Press Start to begin the workout.

Interval Distance - Using the Arrow Keys, set a training distance. Press ENTER and set a rest time. Press Start to begin the workout.

Interval Variable - Using the Arrow Keys, set a training time, then press ENTER to confirm and set a training distance. Press ENTER and set a rest time. Press Start to begin the workout.

Programs

CUSTOM:
Choose Custom, then press ENTER to confirm and choose one of four custom modes:

V:30/:30R - Training 30 seconds, Rest 30 seconds

V1:00/1:00R...7 - Training 1 minute, Rest 1 Minute, Repeat 7 times.

V2000m/3:00R...4 - Training 2000m, Rest 3 Minute, Repeat 4 times.

V1:40/:20R...9 - Training 1:40 minutes, Rest 20 seconds, Repeat 9 times.

RACE:
Choose Race then press ENTER to confirm. Select L1 - L5 using the Arrow Keys. Press ENTER to confirm and enter a distance setting. Press Start to begin the Race.

A dot-matix will appear that displays you versus the PC graphic to race.
The program will end at the end of the race.

Pressing ENTER you can switch between seeing the different values and their averages.

The dot-matrix will show PC WIN or USER WIN.

Note: In the Race you can only set Distance, TIME/500M is Fixed, TIME/500M for L1-L15 is as below:

L1	8:00
L2	7:30
L3	7:00
L4	6:30
L5	6:00
L6	5:30
L7	5:00
L8	4:30
L9	4:00
L10	3:30
L11	3:00
L12	2:30
L13	2:00
L14	1:30
L15	1:00

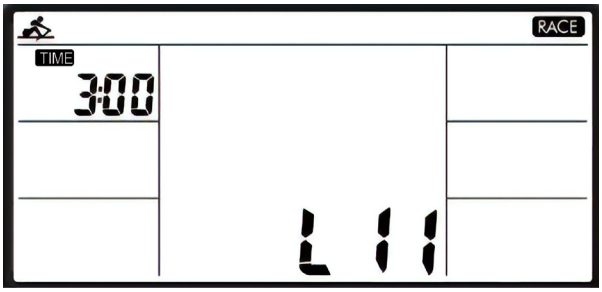

RACE
MODE

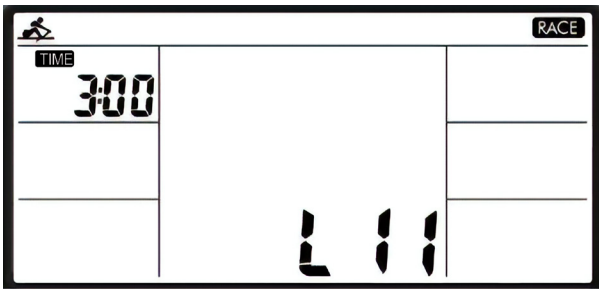

DISTANCE
SET

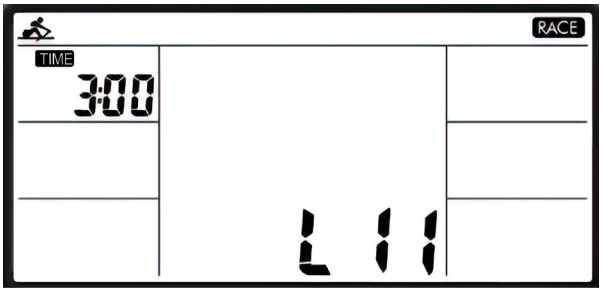

START

Troubleshooting

Problem	Cause	Solution
Monitor does not display	Batteries not Installed	Install Batteries
	Computer Wires not connected	Ensure the computer wires are connected properly at the upright and computer
No count or distance displays on the monitor	Sensor wire not connected	Ensure the computer wires are connected properly at the upright and the computer
	Sensor wire not working properly	Replace sensor wire
	Monitor not working properly	Replace monitor

Manufacturer's Limited Warranty

Effective March 04, 2020 - ROWER LIMITED WARRANTY

XTERRA Fitness Inc. warrants all its home use Rower parts for a period of time listed below, from the date of retail sale, as determined by a sales receipt or in the absence of a sales receipt, eighteen (18) months from the original factory shipping date. XTERRA Fitness' responsibilities include providing new or remanufactured parts, at XTERRA Fitness' option, and technical support to our independent dealers and servicing organizations. In the absence of a dealer or service organization, these warranties will be administered by XTERRA Fitness directly to a consumer. The warranty period applies to the following components:

Home Use Limited Warranty		
Frame	Parts	Labor
Lifetime	2 Years	1 Year

NORMAL RESPONSIBILITIES OF THE CONSUMER

This warranty applies only to products in ordinary household use. The consumer is responsible for the items listed below:

1. The warranty registration card must be completed and returned to the address listed on the card within 10 days of the original purchase to validate the manufacturer's limited warranty or register online at the XTERRA Fitness website.
2. Proper use of the Rower in accordance with the instructions provided in this manual, including maintenance.
3. Proper connection to a power supply of sufficient voltage, replacement of blown fuses, repair of loose connections or defects in house/facility wiring.
4. Expenses for making the Rower accessible for servicing, including any item that was not part of the Rower at the time it was shipped from the factory.
5. Damages to the Rower finish during shipping, installation or following installation.

EXCLUSIONS

This warranty does not cover the following:

1. CONSEQUENTIAL, COLLATERAL, OR INCIDENTAL DAMAGES SUCH AS PROPERTY DAMAGE AND INCIDENTAL EXPENSES RESULTING FROM ANY BREACH OF THIS WRITTEN OR ANY IMPLIED WARRANTY. Note: Some states do not allow the exclusion or limitation of incidental or consequential damages, so this limitation or exclusion may not apply to you.
2. Service call reimbursement to the consumer. Service call reimbursement to the dealer that does not involve malfunction or defects in workmanship or material, for units that are beyond the warranty period, for units that are beyond the service call reimbursement period, for Rowers not requiring component replacement, or Rowers not in ordinary household use.
3. Damages caused by services performed by persons other than authorized XTERRA Fitness service companies, use of parts other than original XTERRA Fitness parts, or external causes such as alterations, modifications, abuse, misuse, accident, improper maintenance, inadequate power supply, or acts of God.
4. Products with original serial numbers that have been removed or altered.
5. Products that have been; sold, transferred, bartered, or given to a third party.
6. Products that are used as store display models.
7. Products that do not have a warranty registration on file at XTERRA Fitness Inc. XTERRA Fitness reserves the right to request proof of purchase if no warranty record exists for the product.
8. Product use in any environment other than a residential setting.
9. THIS WARRANTY IS EXPRESSLY IN LIEU OF ALL OTHER WARRANTIES EXPRESSED OR IMPLIED, INCLUDING THE WARRANTIES OF MERCHANTABILITY AND/OR FITNESS FOR A PARTICULAR PURPOSE.

SERVICE

Keep your bill of sale. Twelve (12) months from the date on the bill of sale or eighteen (18) months from the date of factory shipping as determined by the serial number establishes the warranty period should service be required. If service is performed, it is in your best interest to obtain and keep all receipts. This written warranty gives you specific legal rights. You may also have other rights that vary from state to state. Service under this warranty must be obtained by following these steps, in order:

1. Contact your selling authorized XTERRA Fitness dealer. OR
2. Contact your local authorized XTERRA Fitness service organization.
3. If there is a question as to where to obtain service, contact our service department at (870)333-5500
4. XTERRA Fitness' obligation under this warranty is limited to repairing or replacing, at XTERRA Fitness' option, the product through one of our authorized service centers. All repairs must be preauthorized by XTERRA Fitness. If the product is shipped to a service center freight charges to and from the service center will be the customer's responsibility. For replacement parts shipped while the product is under warranty, the customer will be responsible for shipping and handling charges. For in-home service, the customer will be responsible for a trip charge. There will be an additional trip charge if the customer is located over 100 miles from the nearest service center.
5. The owner is responsible for adequate packaging upon return to XTERRA Fitness. XTERRA Fitness is not responsible for damages in shipping. Make all freight damage claims with the appropriate freight carrier. DO NOT SHIP ANY UNIT TO OUR FACTORY WITHOUT A RETURN AUTHORIZATION NUMBER. All units arriving without a return authorization number will be refused.
6. For any further information, or to contact our service department by mail, send your correspondence to:

XTERRA Fitness, Inc.
P.O. Box 2037
Jonesboro, AR 72402-2037

Product features or specifications as described or illustrated are subject to change without notice. All warranties are made by XTERRA Fitness, Inc. This warranty applies only in the 48 contiguous United States. NOTE: This does not include Alaska or Hawaii.

3000 Nestle Road Jonesboro, AR 72401 - Phone:870-333-5500 - Fax:870-935-7611

©2021 All RIghts Reserved.