XTERRA FITNESS

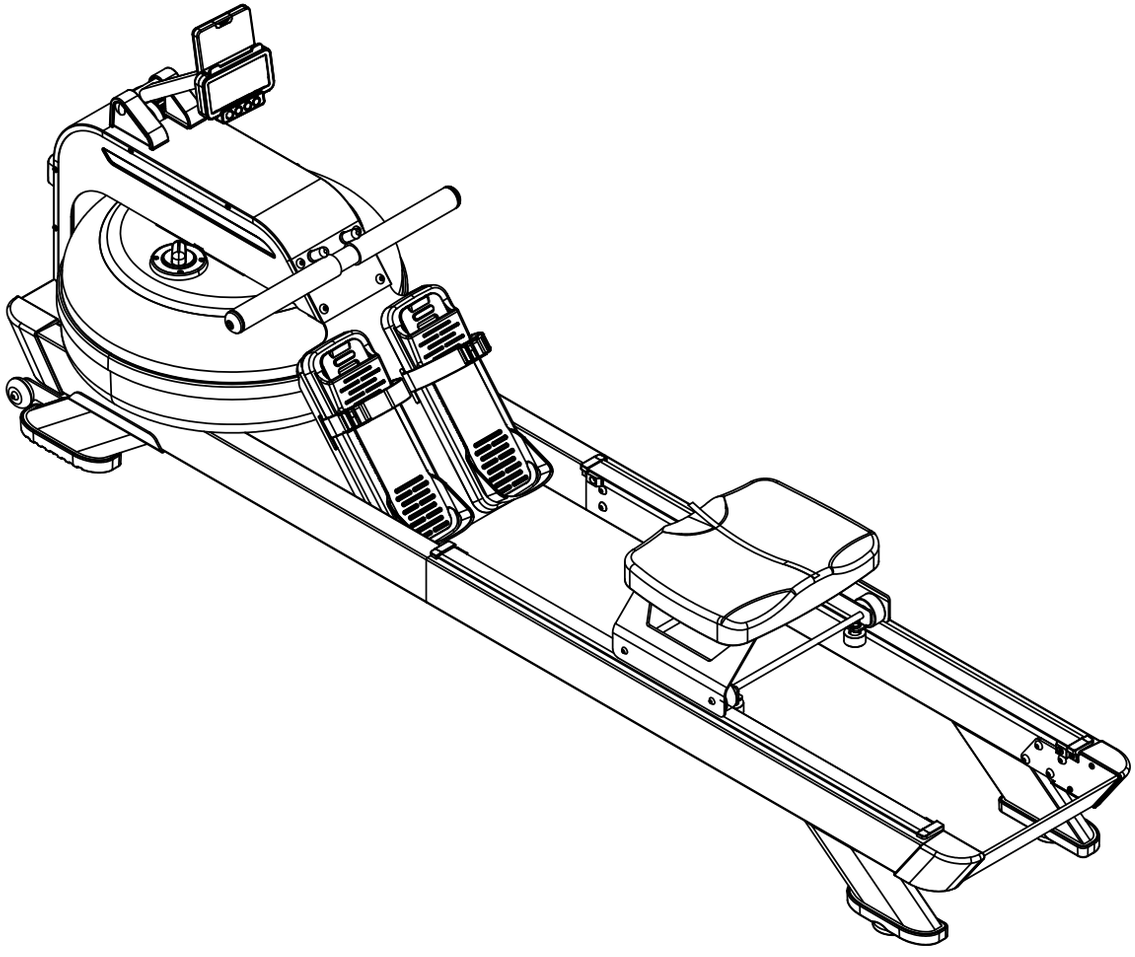

ERG750W WATER ROWING MACHINE

ERG750W_175926_OM_20250409

Online Support

If you require assistance or are experiencing issues with your XTERRA Machine, please contact customer care for additional help.

1-800-258-8511

questions@xterrafitness.com

Warranty Registration

Scan to quickly and easily register your new XTERRA Fitness machine.

Table of Contents

Product Registration 3
Warning / Safety Instructions
Product Label 4
Safety Instructions 5
Parts and Assembly
Parts of your Rower 6
Parts Included 7
Assembly 8
Water Tank 13
Adjustments 14
Features
About your Machine 15
Console Screen - Overview 16
Console Functions 17
Programs 18
Storage & Maintenance 20
Troubleshooting 21
Exploded View Diagram 22
Warranty 23

PRODUCT REGISTRATION

Congratulations on your new Water Rowing Machine, and welcome to the XTERRA Fitness family!

Thank you for your purchase of this quality unit from XTERRA Fitness. Your new unit was manufactured by one of the leading fitness manufacturers in the world and is backed by one of the most comprehensive warranties available. XTERRA Fitness will do all we can to make your ownership experience as pleasant as possible for many years to come.

If you have questions, or if parts are missing or damaged, or you require customer service, call (870) 335-5500. Please have your model number and serial number handy when you call.

Please take a moment at this time to record the name of the dealer, their telephone number, and the date of purchase below to make any future, needed contact easy. We appreciate your support and we will always remember that you are the reason that we are in business.

Serial Number	
Date of Purchase	
Dealer / Place of Purchase	

WARRANTY REGISTRATION

Use your smartphone to scan the QR code above to quickly and easily register your new XTERRA Fitness machine.

You can also go to **xterrafitness.com/warranty** under the Support tab to register online.

Version: 1.0
Revision: 11.12.2025

PRODUCT LABELS



SERIAL NUMBER STICKER

This sticker will be found on the frame. Please record the number below the barcode for the purpose of registering your Rower's warranty.

PROPOSITION 65 WARNING

This sticker will be found on the rear stabilizer. The State of California requires us to inform you that this unit was manufactured using chemicals that could cause harm with improper use.

SAFETY INSTRUCTIONS

Read all instructions before using this appliance.

WARNING - To reduce the risk of injury to persons:

1. Do not operate under blanket or pillow. Excessive heating can occur and cause fire, electric shock, or injury to persons.
2. This exercise equipment is not intended for use by persons with reduced physical, sensory or mental capabilities, or lack of experience and knowledge.
3. Use this appliance only for its intended use as described in this manual. Do not use attachments not recommended by the manufacturer.
4. Never operate this appliance if it is not working properly, if it has been dropped or damaged, or dropped into water. Return the appliance to a service center for examination and repair.
5. Never operate the appliance with the air openings blocked. Keep the air openings free of lint, hair, and the like.
6. Never drop or insert any object into any opening.
7. Do not use outdoors.
8. Do not operate where aerosol (spray) products are being use or where oxygen is being administered.
9. The appliance is intended for household use.
10. Do not operate equipment on deeply padded, plush or shag carpet. Damage to both carpet and equipment may result.
11. Before beginning this or any exercise program, consult a physician. This is especially important for persons over the age of 35 or persons with pre-existing health conditions.
12. Keep hands away from all moving parts.
13. The pulse sensors are not medical devices. Various factors, including the user's movement, may affect the accuracy of heart rate readings. The pulse sensors are intended only as exercise aids in determining heart rate trends in general.
14. Do not attempt to use your equipment for any purpose other than for the purpose it is intended.
15. Wear proper shoes. High heels, dress shoes, sandals or bare feet are not suitable for use on your equipment. Quality athletic shoes are recommended to avoid leg fatigue.
16. **User Weight Limit: 350 lb.**

Please ensure that you review and adhere to the user weight restrictions and power requirements of your new machine. Failure to do so may result in serious injury or damage to your machine.

PARTS OF YOUR ROWER

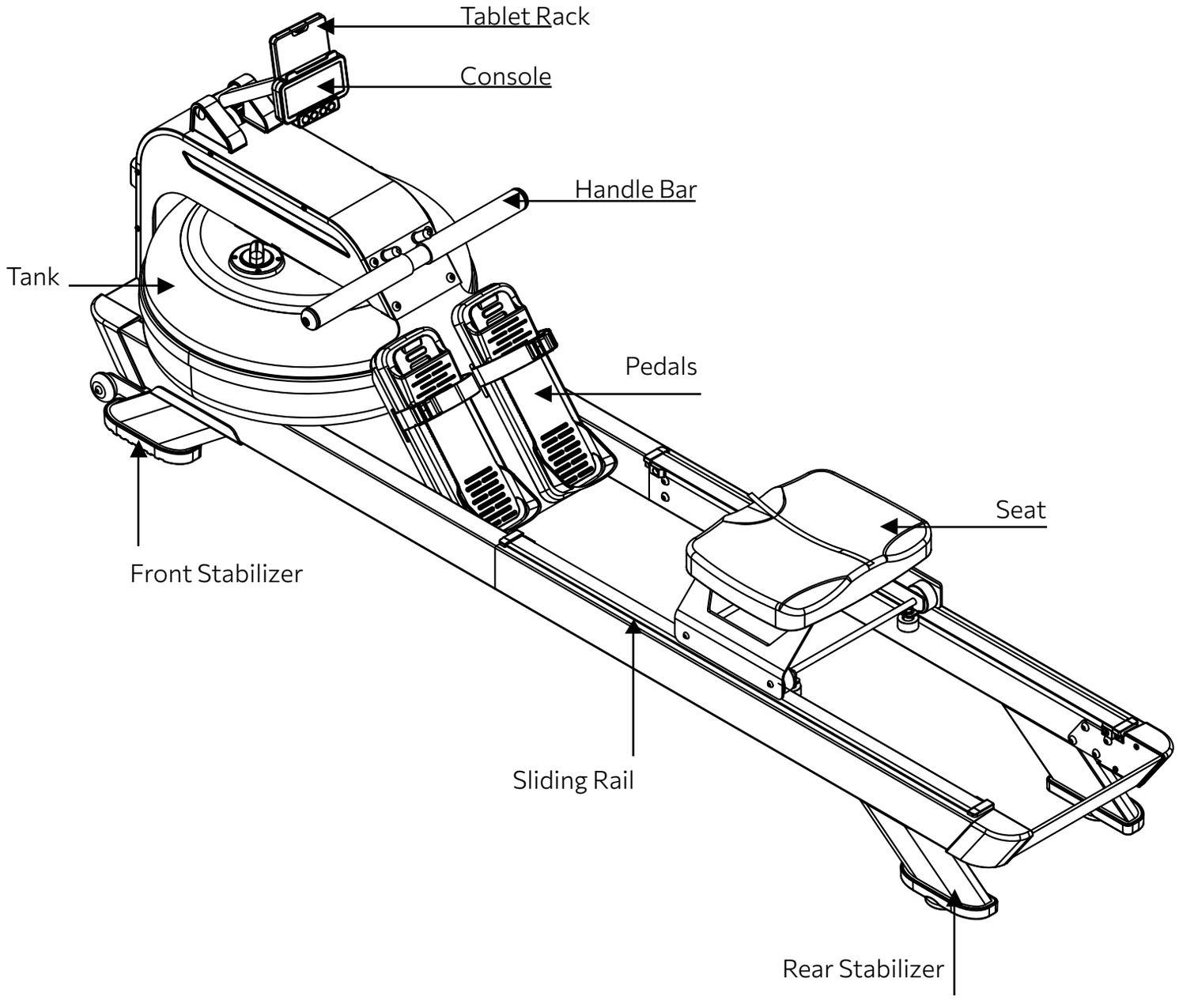

PARTS INCLUDED

PARTS INCLUDED:

- ❑ Main Frame Group (No.1)
- ❑ Right Rear Track Group (No.2)
- ❑ Left Rear Track Group (No.3)
- ❑ Console Group (No. 6)
- ❑ Rear Connection Group (No.15)
- ❑ Left Front Stabilizer Group (No.20)
- ❑ Right Front Stabilizer Group (No.21)
- ❑ Seat Cushion Group (No. 24)
- ❑ Left Rotating Shaft Trim Cover (No.32)
- ❑ Right Rotating Shaft Trim Cover (No.33)
- ❑ Funnel + Pump (No.132)
- ❑ Screws (No.124) x 26pcs
- ❑ Allen Wrench (No.129)

Note: Above parts are all needed to assemble this machine. Before you start to assemble, please check the hardware packing to make sure they are included.
Some of the parts for this machine are preassembled on the unit. Please read your manual to ensure everything is there.

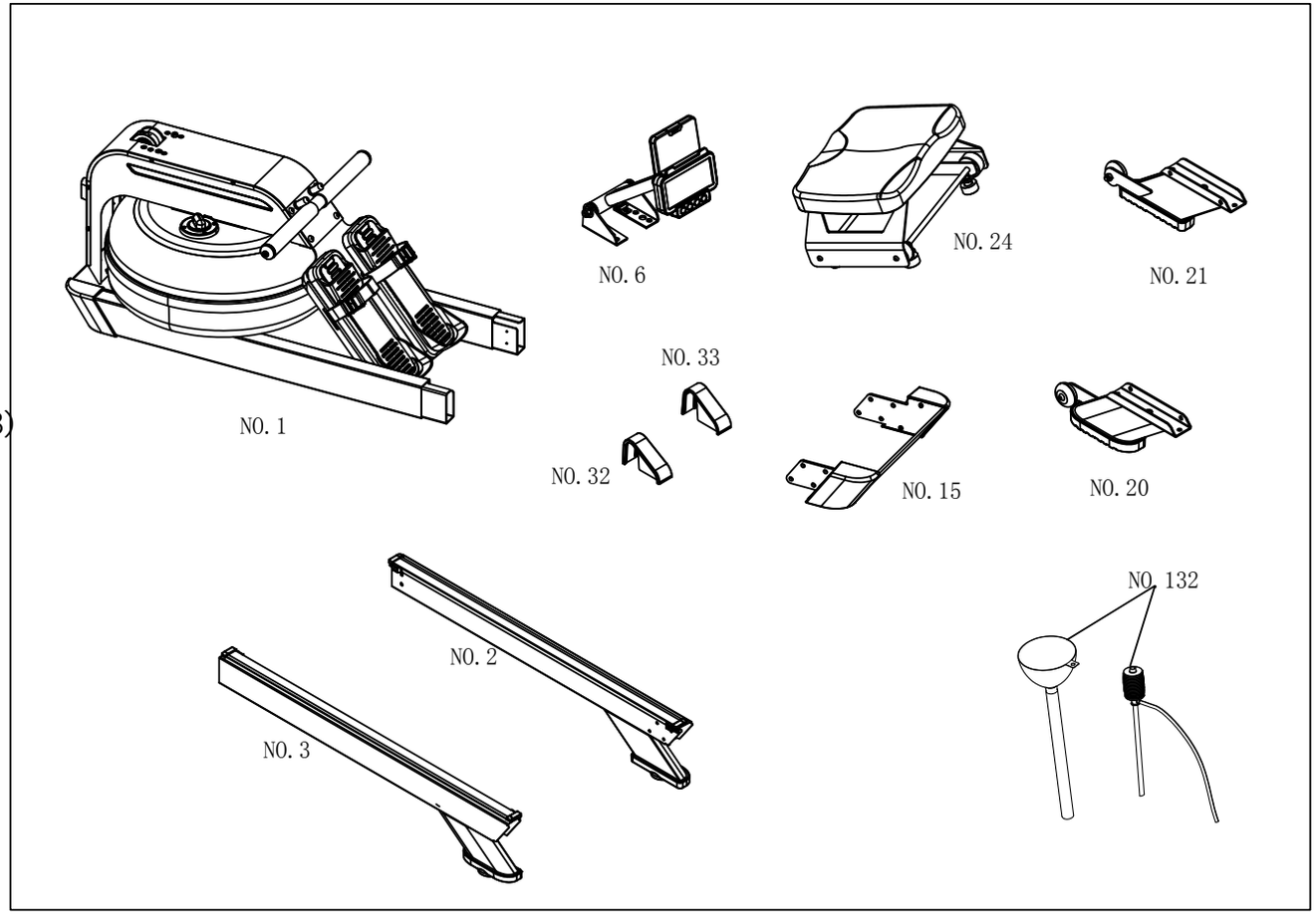

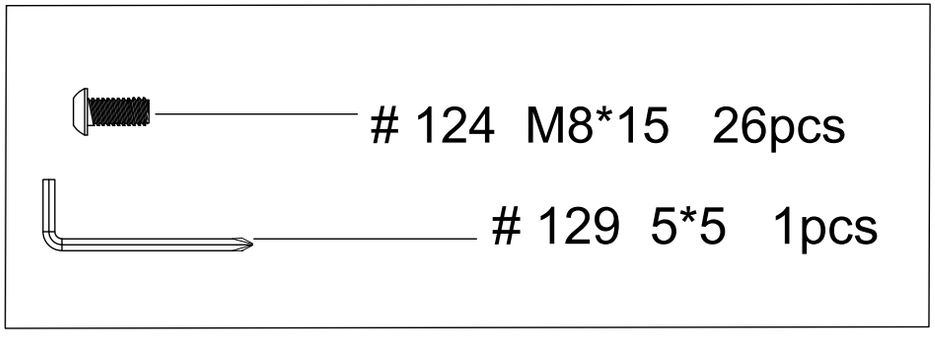

ASSEMBLY - STEP 1

NOTE: We recommend having 2 people to assemble the product. Please be careful when assembling. The Main Frame is easy to topple.

1. As shown in the figure, stand the **Main Frame Group (No.1)**.
2. Place the **Left-Front Stabilizer Group (No. 20)** at the Screws hole of the **Left-Front Track Group (No. 5)**, and use the 3pcs of **Flat-Head Inner Hexagon Screws (No. 124)** with the **Hexagon wrench (No. 129)**. In the same way, lock the **Right-Front Stabilizer Group (No. 21)** and the **Right-Front Track Group (No. 4)** with the 3pcs **Screws (No. 124)**.

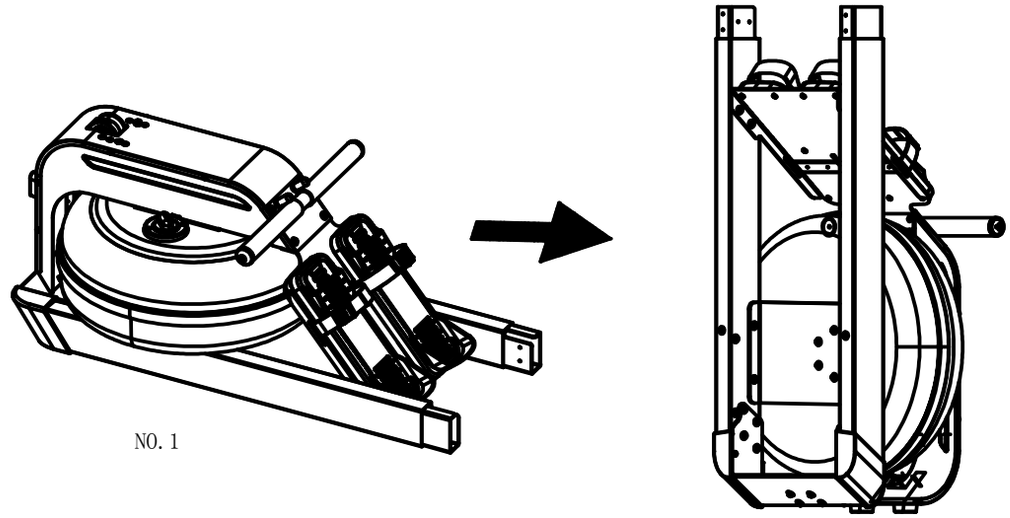

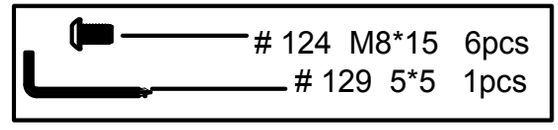

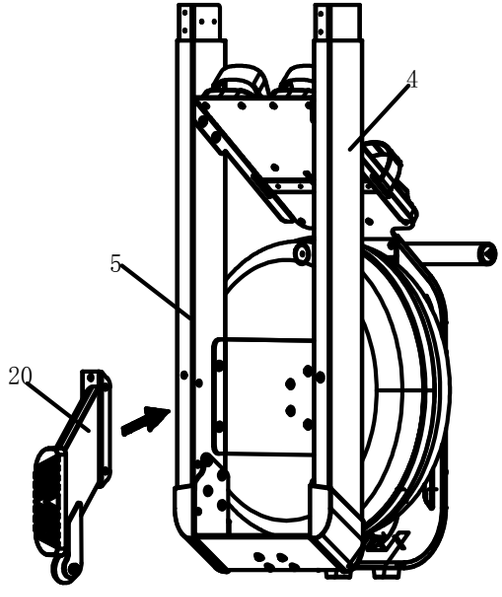

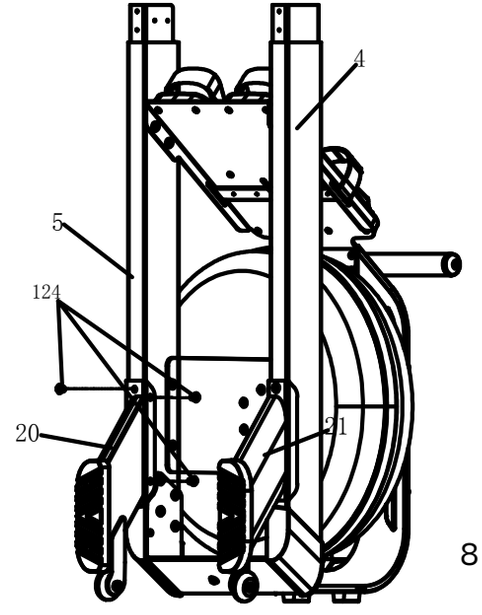

ASSEMBLY - STEP 2

1. As shown in the figure, align the **Left-Rear Track Group (No. 3)** with the **Left-Front Track Group (No. 5)**, insert the combination, align the Screws hole, and tighten with the 4pcs **Screws (No. 124)** with the **Inner Hexagon Wrench (No. 129)**.

2. The right **Right-Rear Group (No. 2)** and the **Right-Front Track Group (No. 4)** are installed in the same installation manner.

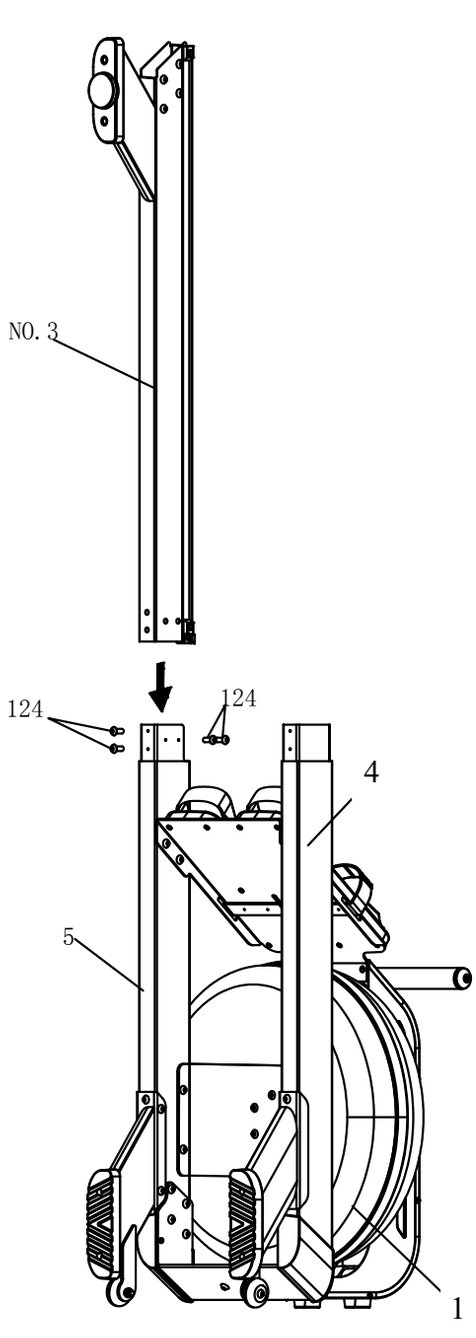

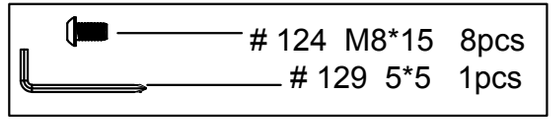

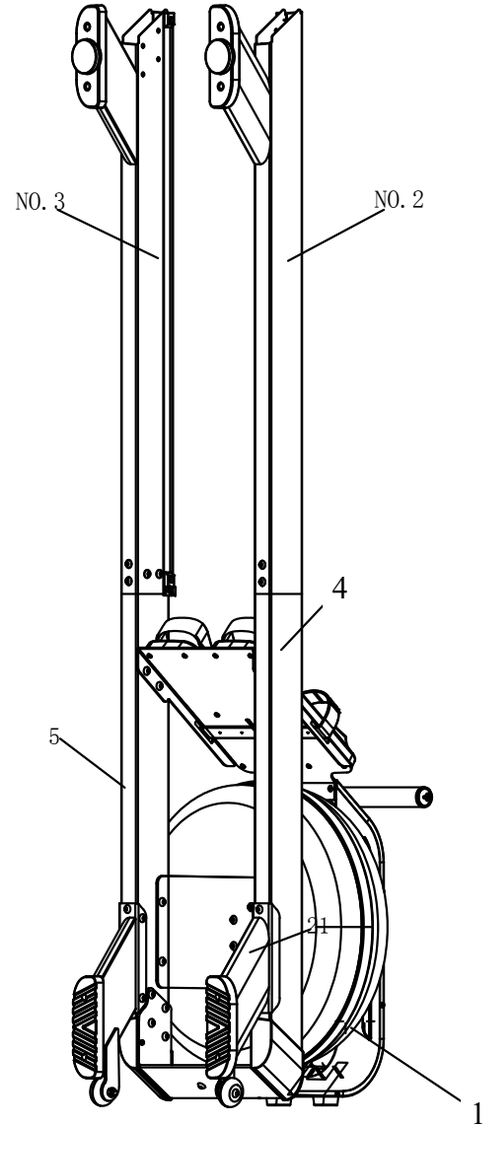

ASSEMBLY - STEP 3

1. Place the rower machine flat for the next installation, as shown in the figure.
2. With the **Hexagonal Wrench (No. 129)**, remove the **Seat Rubber Pad (No. 40)** and the **Track End Plug Left (No. 41)** and **Track End Plug Right (No. 42)**, insert the **Seat Cushion Group (No. 24)** into the Track Group according to the arrow, and re-install the Screws with the **Hexagonal Wrench (No. 129).**

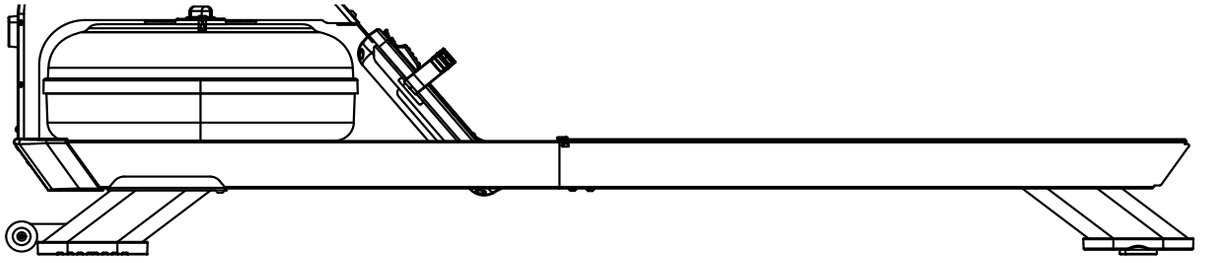

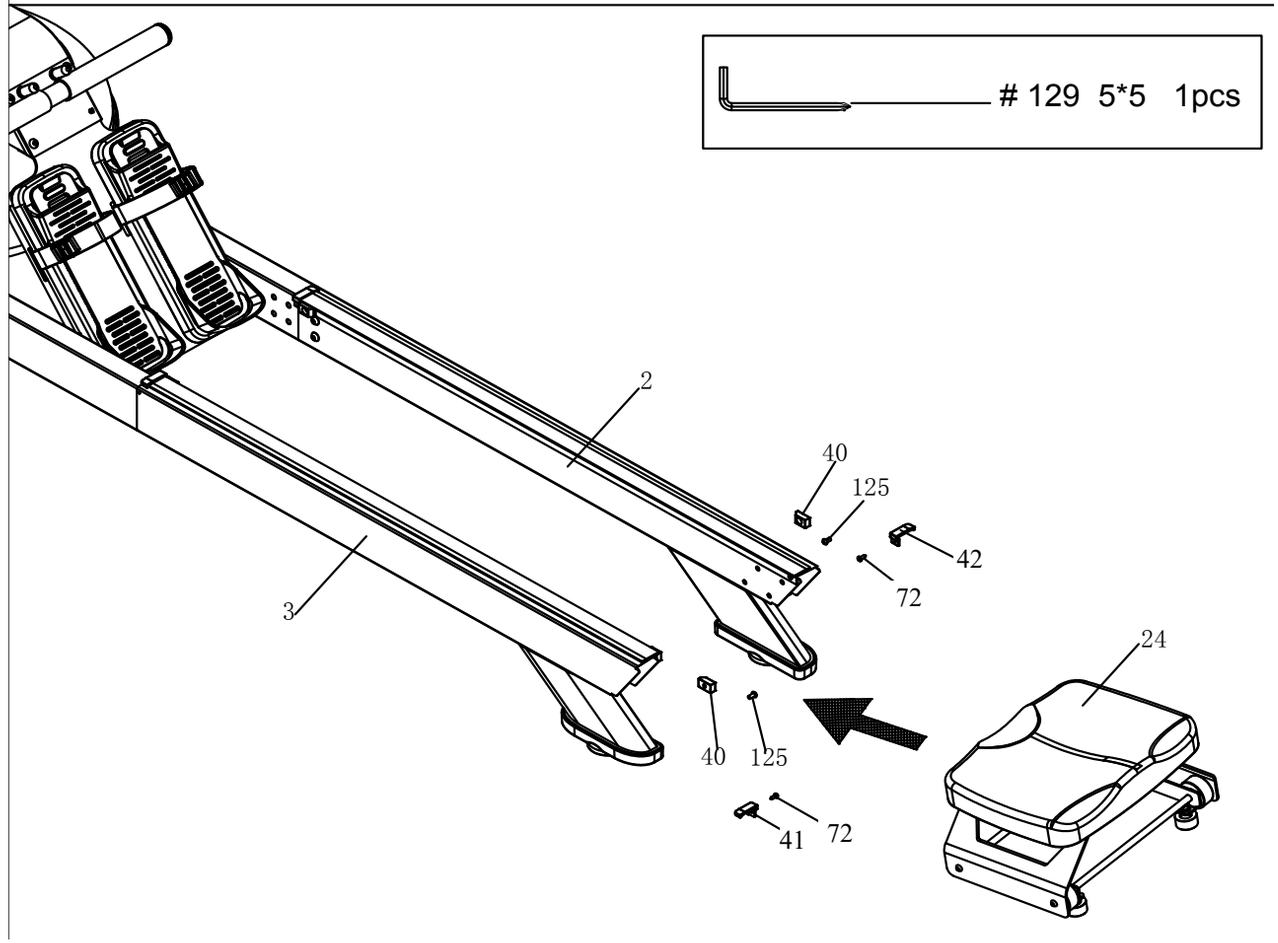

ASSEMBLY - STEP 4

1. Line the **Rear Connection Group (No. 15)** with the Screw hole position of the **Left and Right-Rear Track Group (No. 3) (No. 2)** in the direction of the arrow. Attach the **Rear Connector Group (No. 15)** and the **Right-Rear Track Group (No. 2)** with the 4pcs **Screws (No. 124)** and the **Inner Hexagonal Wrench (No. 129)**.
2. The **Rear Connection Group (No. 15)** and the **Left-Rear Track Group (No. 3)** are tightly fastened in the same assembly way.

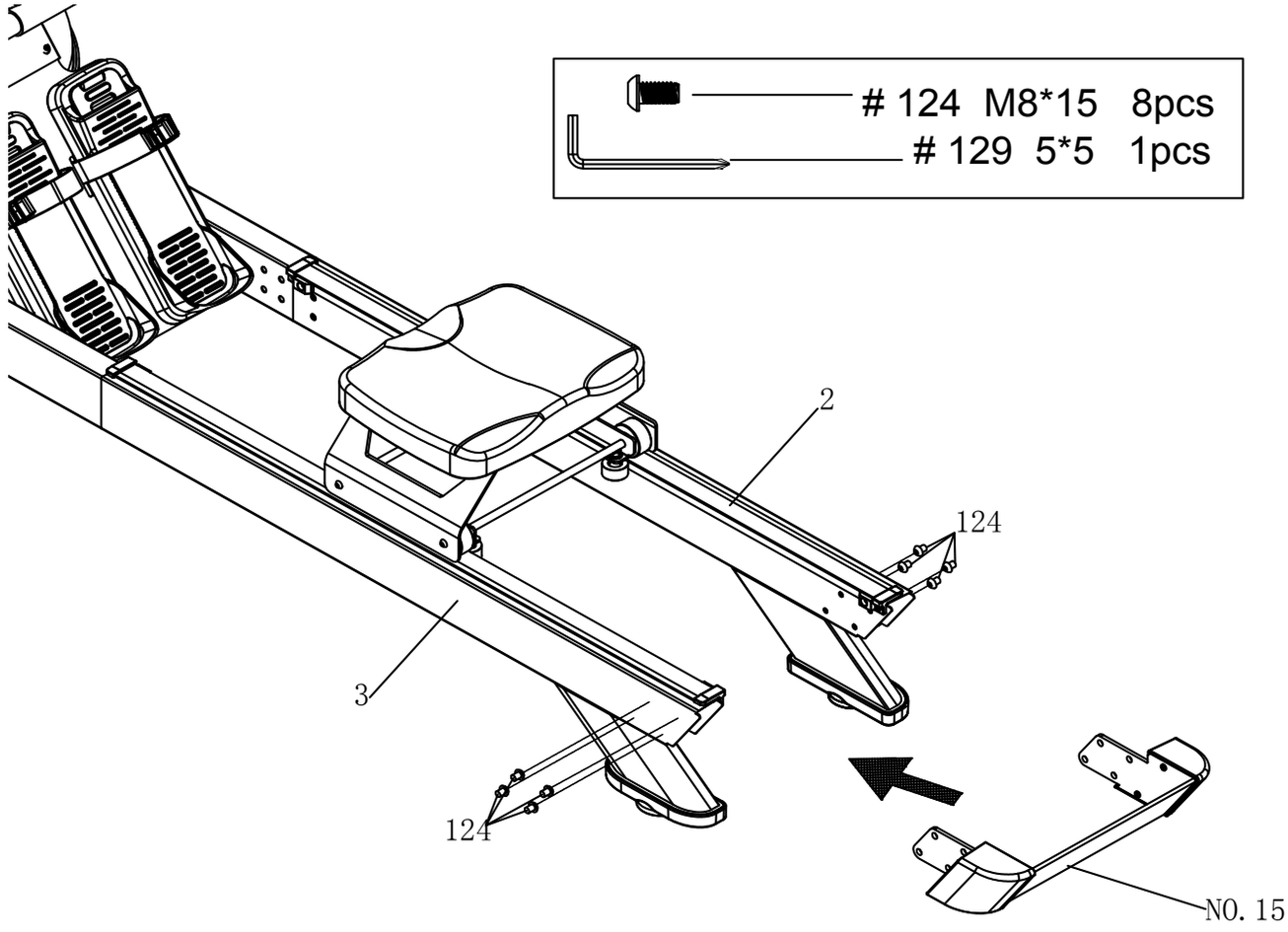

ASSEMBLY - STEP 5

1. As shown in the figure, align the screw hole position on the **Console Group (No. 6)** with the screw hole position on the **Main Frame Cover Top (No. 19)**, and hold firmly with the 4pcs **Screws (No. 124)** and the **Internal Hexagonal Wrench (No. 129)** to lock.
2. Place the **Disc Buckle (No. 74)** in the **Left and Right Rotating Shaft Trim Cover (No. 32) (No. 33)** at the corresponding hole on the **Main Frame Cover Top (No. 19)**, and press in the direction of the arrow. Tighten and fix. As shown in the small figure (1). Complete the installation step, to be like small figure (2).

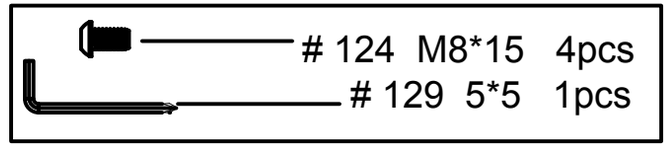

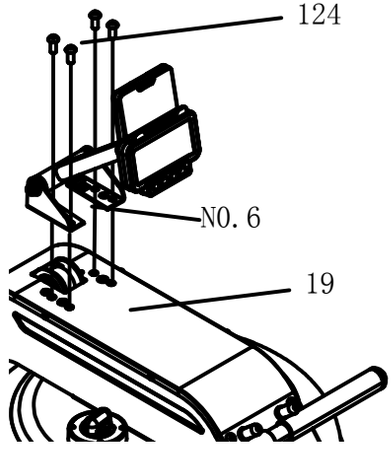

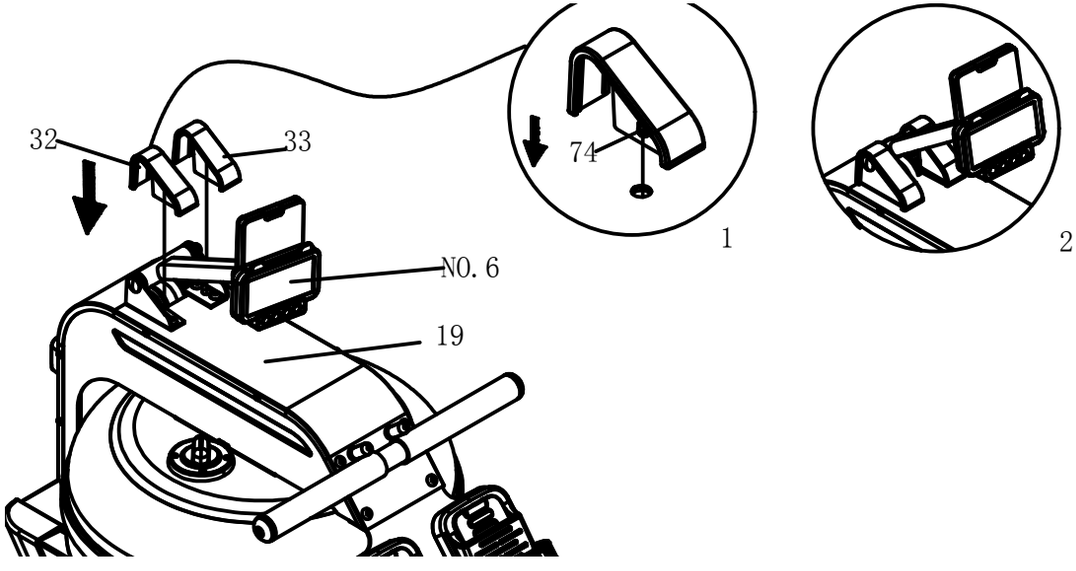

HOW TO FILL AND EMPTY THE TANK

1. Pull out the tank plug from the upper tank
2. Fill water as Figure A. Insert the water funnel into the tank and then fill the water tank with a cup or bucket. Measure the water in the tank according to the digital mark on the side of the tank.
3. Pumping of water as Figure B. Put a bucket next to the rower machine, and pump the water from the tank into the bucket.
4. Plug the tank into the upper tank and dry the water on and around the table and adjustment knob with a dry cloth.

NOTE:

- Only distilled water or pure water can be injected into the water tank. Also, can add the water purification tablets. Do not use inferior water purification tablets or bleach. They will damage the water tank and are exempt from the warranty.
- If you are using purification tablets, It is necessary to replace it every six months. If the water quality is very cloudy, please replace the water in time.
- The water replaced in the water tank is not suitable for re-consumption, please press the sewage treatment.

WATER LEVEL

- Do not exceed the water label. Water added beyond the maximum water level is exempt from the warranty.

Fig. A

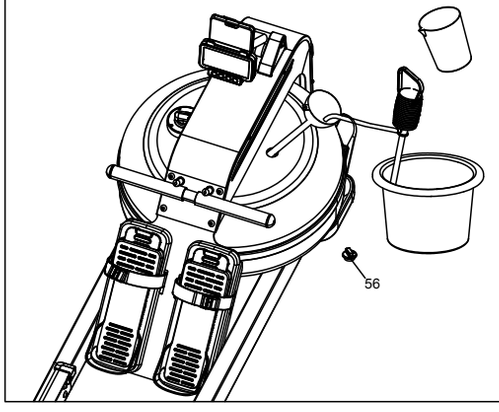

Fig. B

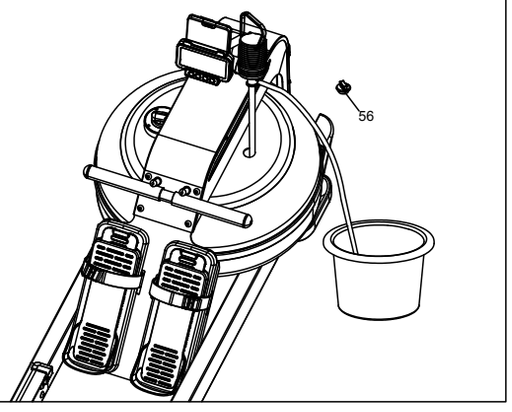

Level	Capacity (Liters)	Capacity (Gallons)	Capacity (Quarts)
L1	6.5	1.72	6.86
L2	7.1	1.87	7.50
L3	7.8	2.06	8.24
L4	8.4	2.22	8.87
L5	9	2.38	9.50
L6	10	2.64	10.56

ADJUSTMENT GUIDES

The foot strap and foot pedal are adjustable and can be adapted to accommodate different users' foot sizes.

To adjust the foot pedal: Pull from the upper part of the foot pedal to separate it from the lower part. Adjust it up or down to fit your foot size, then reinsert it into the lower part of the foot pedal to secure.

To adjust the foot strap: Press the buckle on the strap hook and pull it to the right. After pressing the buckle, pull the strap to the left to loosen it. Once the desired size is achieved, fasten the buckle.

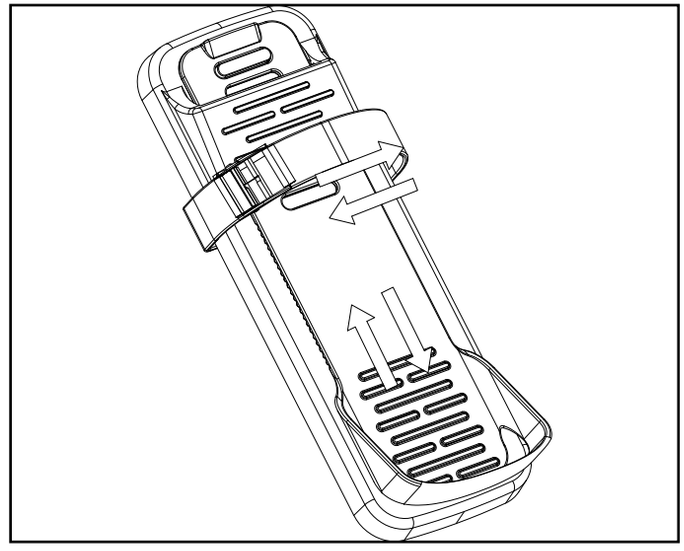

Adjusting the Balance

If the machine is uneven after assembly, adjust the adjustment **Rubber Pad (No. 43)** on the Rear Track Group to even it out.

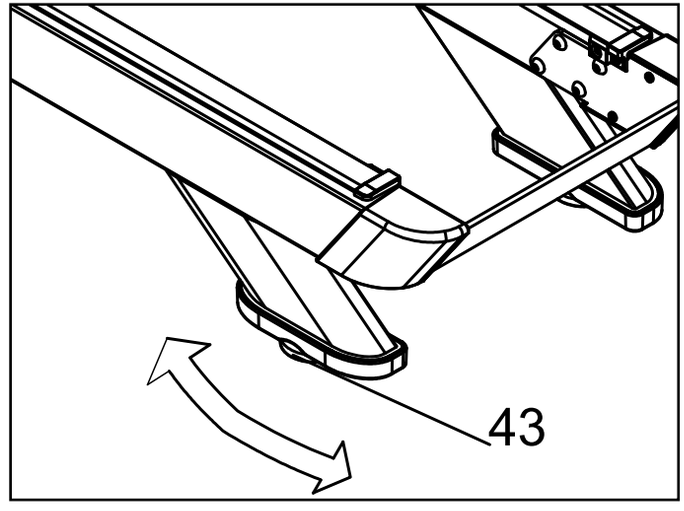

CAUTION!

Moving parts, such as the seat, can crush and cut. Keep hands clear of the Slide Rail during use.

ABOUT YOUR MACHINE

Always use care and caution when operating your machine. Follow instruction in this manual to ensure safe operation and maintenance of your unit.

Your new XTERRA Fitness unit has Bluetooth connectivity to give you access to the most advanced workout experiences available. Follow the instructions on page 19 to learn more about using the Bluetooth capabilities to their fullest potential.

Downloading the XF Connect app will help unlock more features - such as tracking workouts and sharing data via Google Fit and Apple Fitness. Simply search for "**XF Connect**" in the app store on your smartphone or tablet, or scan the QR code on the right



The **XF Connect** app is available on Google Play and the Apple App Store. Scan the QR Code below, and quickly and easily sign up to start taking your workout experience to a whole new level.

Available on the App Store

GET IT ON Google play

Be sure to follow XTERRA Fitness on your favorite social media platforms to view and share the latest fitness videos, images, and news.

facebook.com/XterraFitness

www.instagram.com/XterraFitness

youtube.com/user/XterraFitnessOnline

CONSOLE SCREEN - OVERVIEW

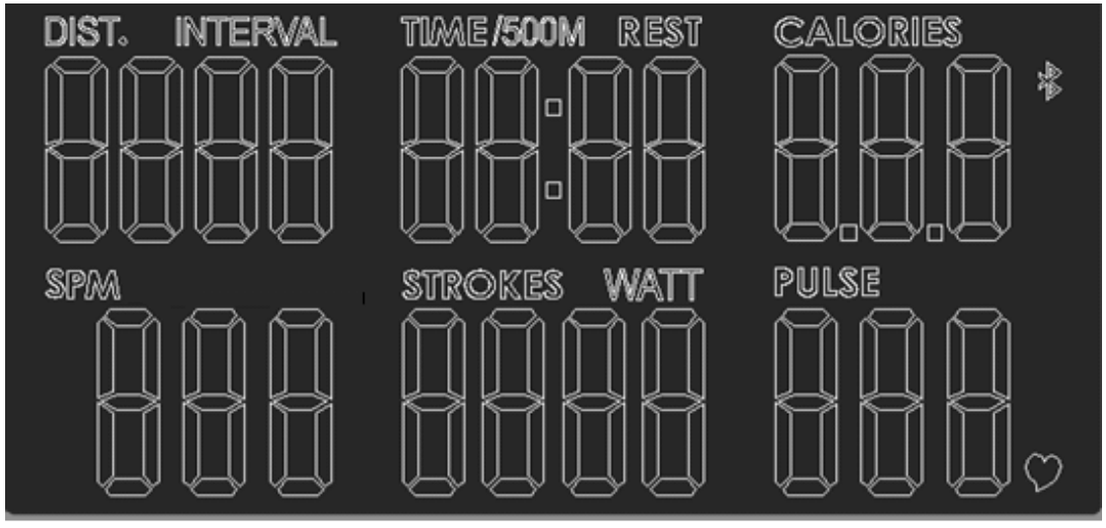

Button Functions

MODE: When the unit is not in use, press the MODE button to enter the settings (distance, time, calories, strokes).

Hold the MODE button for 3 seconds to enter the INTERVAL setting.

RESET: Press the RESET key to zero the set point.

Hold the RESET key for 2 seconds to restart the console.

UP: Add values to the distance, time, calories, and strokes settings by pressing the UP arrow.

DOWN: Reduce the values of the distance, time, calories, and strokes settings by pressing the DOWN arrow.

CONSOLE FUNCTIONS

TIME: Set a target time by pressing the UP and/or DOWN buttons (1min ~ 99 min), in 1 minute increments.

TIME / 500M: Your average time to reach 500 meters is automatically displayed.

DISTANCE: Preset a target value by pressing the UP and/or DOWN buttons (0 ~ 9999 meters), 100 meters increments.

STROKES: Set a target value by pressing the UP and/or DOWN buttons (0~9999 strokes). 25 strokes increments.

WATT: Displays WATT value; alternates between STROKE & WATT values

CALORIES: Set a target value by pressing the UP and/or DOWN buttons (0~999 Cal). 20 caloric increments.

PULSE: Use Bluetooth to connect with the heart rate monitor and detect a heartbeat. The heartbeat scan will turn off after 90 seconds if a Bluetooth heartbeat is not detected. Press any button to wake up the Bluetooth heartbeat. Heart monitor accessories are sold separately.

SPM: Strokes per minute

RESISTANCE
Adjust the resistance to the desired level by adjusting the knob found on the water tank. The PULSE section of the console will display the resistance level (L1-L6) for 6 seconds, then the pulse will display for 6 seconds.

PROGRAMS

INTERVAL Program:
Hold the MODE button for 3 seconds. You will hear a prompt sound and enter the INTERVAL setting. Set to the desired interval setting 10-120 seconds (10 second increments).
Press **MODE** to light up REST and set to the desired rest time 10-120 seconds (10 second intervals).
Press **MODE** again to adjust the PULSE window to the desired number of movements (1-99 times).
In INTERVAL mode, START status will show heartbeat, REST displays the remaining rounds.
Start with REST at the beginning of the setting REST--START (Round 1) -- REST--START (Round 2).

1. After the interval exercise is finished, a prompt sound will be emitted and the console will return to normal mode.
2. Press and hold the RESET button to return to normal mode at any time.
3. The machine will return to normal mode after waking from sleep.

If you stop during the exercise, resistance will be paused for 4 seconds, and SPM will go to 0.

BLUETOOTH
The Bluetooth symbol flashing on the display indicates that the APP can be connected

The Bluetooth symbol flicker on the console indicates that the APP can be connected, and the LCD turns off to enter the power saving.

The disappearance of the Bluetooth symbol represents the Bluetooth entering the energy saving mode, which can be awakened by pressing any button.

APP CONNECTION

This console connects to 3rd party fitness apps on your phone or tablet via Bluetooth. Once console is connected to your phone or tablet via Bluetooth, the console will not display. Your workout feedback will be displayed on your device.

Kinomap

1. Open the Kinomap App and click in the lower right corner to add devices.
2. Click equipment management, then click the “+” to start adding equipment.
3. Click the “Rowing” graphic, then scroll through brand connection screen to find and select FTMS or iConsole.
4. Select Rowing Machine, then Bluetooth device.
5. Press the Home Button to return to the Home screen after adding the device.
6. To select a training video, you must select the type of rowing and press the button to enter the training screen.
7. Start training, pressing the pause button at the top of the screen to stop.
8. From the pause screen you can continue the workout or exit to end the workout.

NOTE:
This machine is compatible with other 3rd party fitness apps using FTMS protocol.

STORAGE AND MAINTENANCE

To move the machine, lift up the rear stabilizer until the transportation wheels on the front stand touch the ground. With the wheels on the ground, you can transport the rower to the desired location with ease.

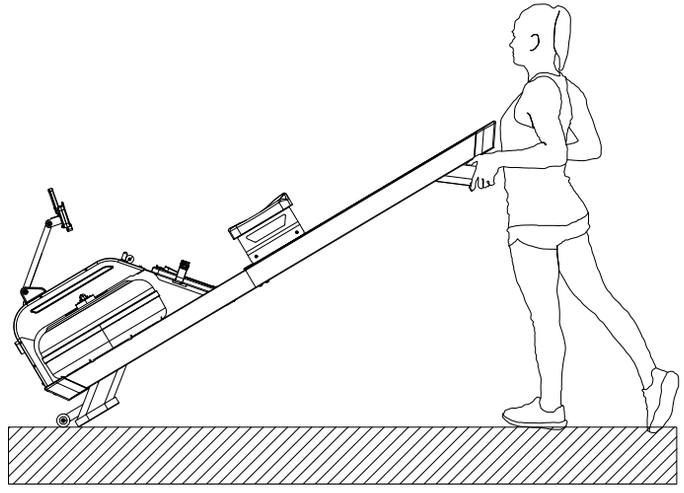

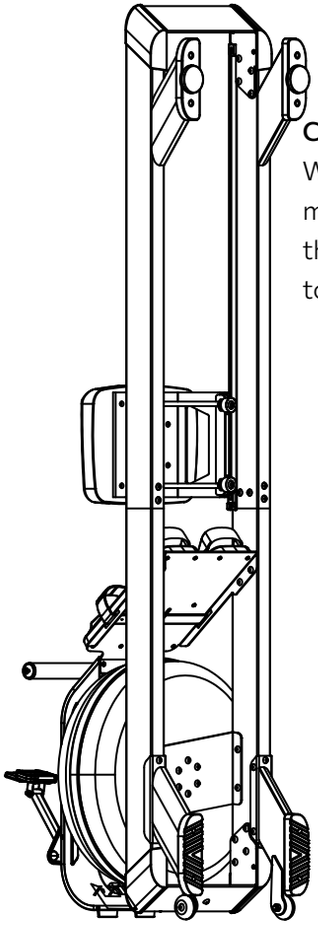

CAUTION!
When standing the machine up, be aware that ones head may touch the track tube!

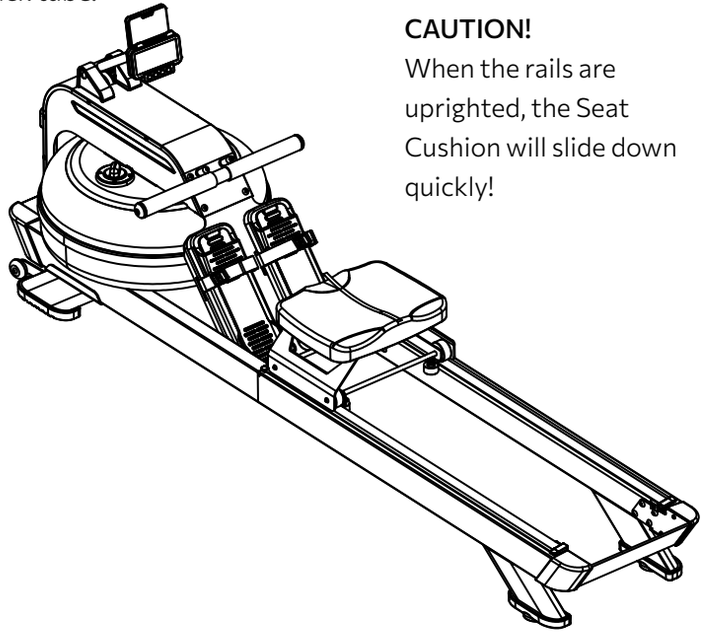

CAUTION!
When the rails are uprighted, the Seat Cushion will slide down quickly!

CAUTION!
When not in use, you can stand the machine track along the direction of the arrow as shown in Figure A to save space. After lifting, the connecting group can erect the machine, and the mat on the main frame will support the ground.

TROUBLESHOOTING

Problem	Cause	Solution
Monitor does not display	Batteries not Installed	Install Batteries
	Computer Wires not connected	Ensure the computer wires are connected properly at the upright and computer
No count or distance displays on the monitor	Sensor wire not connected	Ensure the computer wires are connected properly at the upright and the computer
	Sensor wire not working properly	Replace sensor wire
	Monitor not working properly	Replace monitor

EXPLODED VIEW DIAGRAM

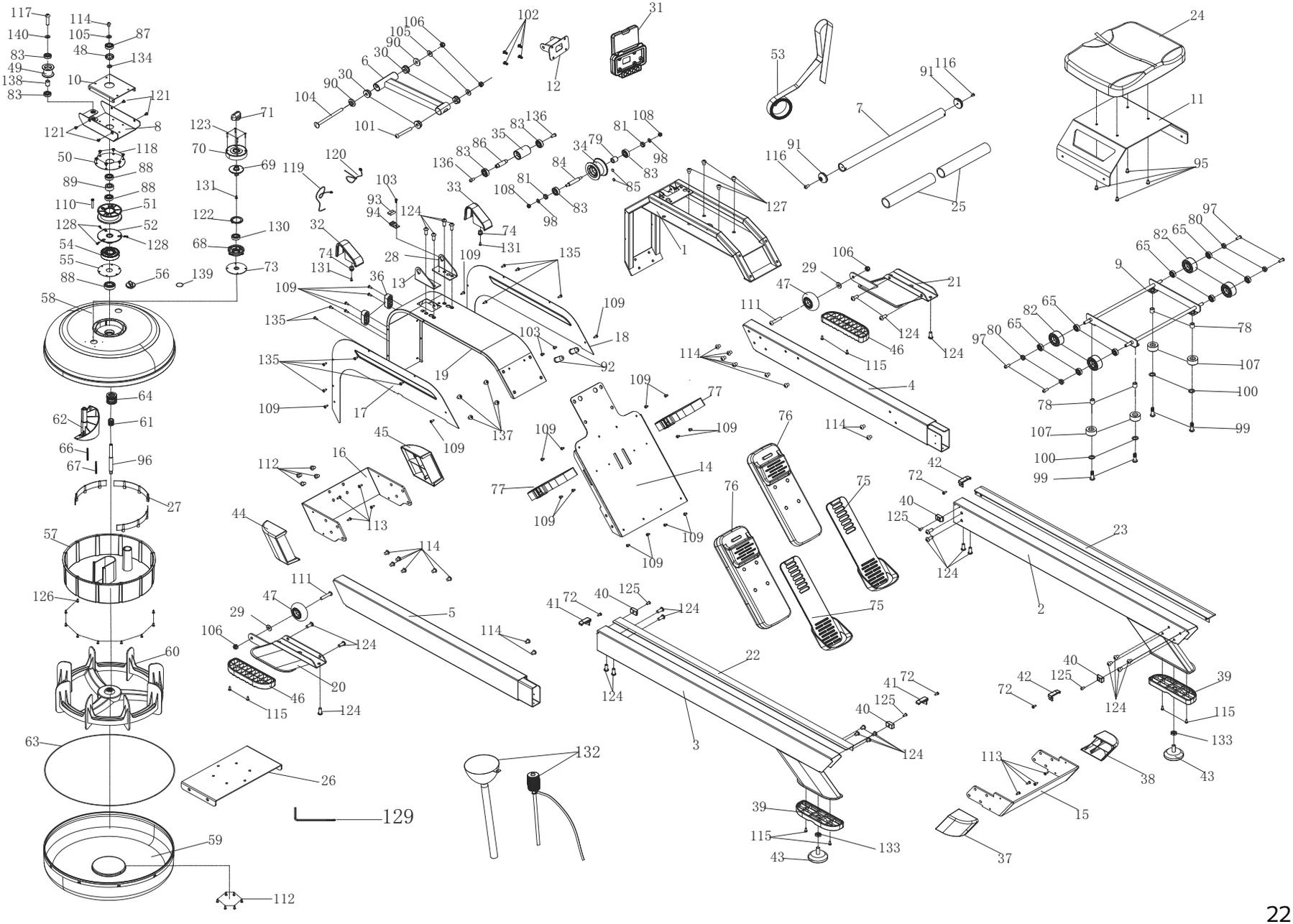

WARRANTY - RESIDENTIAL

Effective November 12, 2025- **ERG750W Water Rowing Machine LIMITED WARRANTY**

XTERRA Fitness Inc. warrants all its home use Water Rowing Machine parts for a period of time listed below, from the date of retail sale, as determined by a sales receipt or in the absence of a sales receipt, eighteen (18) months from the original factory shipping date. XTERRA Fitness's responsibilities include providing new or remanufactured parts, at XTERRA Fitness's option, and technical support to our independent dealers and servicing organizations. In the absence of a dealer or service organization, these warranties will be administered by XTERRA Fitness directly to a consumer. The warranty period applies to the following components:

Home Use Limited Warranty

Warranty	Frame	Parts	Labor
Residential	5 Years	2 Years	None

RESPONSIBILITIES OF THE CONSUMER

This warranty applies only to products in ordinary household use, and the consumer/facility is responsible for the items listed below:

1. Proper use of the Water Rowing Machine in accordance with the instructions provided in this manual
2. Proper installation in accordance with instructions provided with the Water Rowing Machine and with all local electric codes.
3. Expenses for making the Water Rowing Machine accessible for servicing, including any item that was not part of the Water Rowing Machine at the time it was shipped from the factory.
4. Damages to the Water Rowing Machine finish during shipping, installation or following installation.
5. Routine maintenance of this unit as specified in this manual.

WARRANTY - CONTINUED

What is not covered?

EXCLUSIONS

This warranty does not cover the following:

1. CONSEQUENTIAL, COLLATERAL, OR INCIDENTAL DAMAGES SUCH AS PROPERTY DAMAGE AND INCIDENTAL EXPENSES RESULTING FROM ANY BREACH OF THIS WRITTEN OR ANY IMPLIED WARRANTY.
   Note: Some states do not allow the exclusion or limitation of incidental or consequential damages, so this limitation or exclusion may not apply to you.
2. Service call reimbursement to the consumer. Service call reimbursement to the dealer that does not involve malfunction or defects in workmanship or material, for units that are beyond the warranty period, for units that are beyond the service call reimbursement period, for Water Rowing Machine not requiring component replacement, or Water Rowing Machine not in ordinary household or light commercial use.
3. Damages caused by services performed by persons other than authorized XTERRA Fitness service companies; use of parts other than original XTERRA Fitness parts; or external causes such as corrosion, discoloration of paint or plastic, alterations, modifications, abuse, misuse, accident, improper maintenance, inadequate power supply, or acts of God.
4. Products with original serial numbers that have been removed or altered.
5. Products that have been: sold, transferred, bartered, or given to a third party.
6. XTERRA Fitness reserves the right to request proof of purchase if no warranty record exists for the product.
7. THIS WARRANTY IS EXPRESSLY IN LIEU OF ALL OTHER WARRANTIES EXPRESSED OR IMPLIED, INCLUDING THE WARRANTIES OF MERCHANTABILITY AND/OR FITNESS FOR A PARTICULAR PURPOSE.
8. Product use in any environment other than a residential setting.
9. Warranties outside of the United States may vary. Please contact your local dealer for details.

Product features or specifications as described or illustrated are subject to change without notice. All warranties are made by XTERRA Fitness, Inc. This warranty applies only in the 48 contiguous United States. NOTE: This does not include Alaska or Hawaii.

3000 Nestle Road Jonesboro, AR 72401 | Phone: 800-258-8511 | Fax: 870-935-7611

©2025 All Rights Reserved. ERG750W Owner's Manual