XTERRA FITNESS

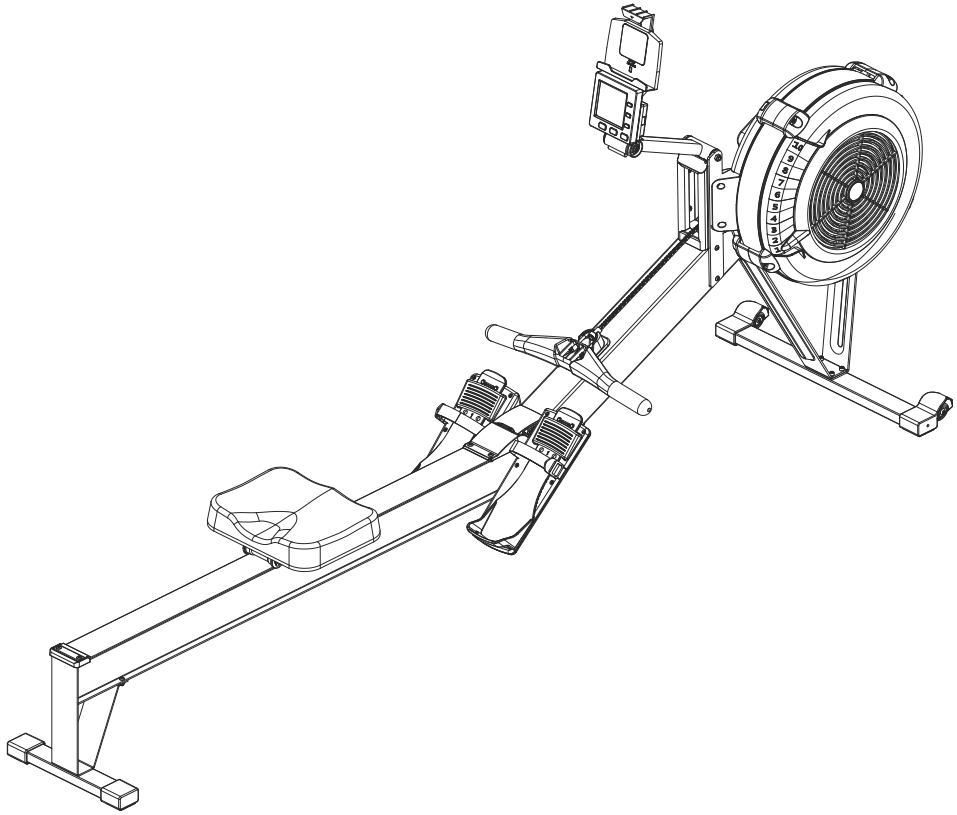

ERG780 AIR ROWER

ERG780_178026_OM_20260714

Online Support

If you require assistance or are experiencing issues with your XTERRA Machine, please contact customer care for additional help.

1-800-258-8511

questions@xterrafitness.com

Warranty Registration

Scan to quickly and easily register your new XTERRA Fitness machine.

Table of Contents

Product Registration 3
Warning / Safety Instructions
Product Label 4
Warning, Compliances, and Notices 5
Safety Instructions 6
Parts and Assembly
Parts of your Rower 7
Parts Included 8
Assembly 9
Adjusting Your Machine 15
Technology and Features
About Your Machine 18
Console Screen - Overview 20
Function Buttons 22
Specifications 23
Programs
Target Training Settings 24
Heart Rate Chest Strap 25
Heart Rate Chest Strap Warnings 26
Heart Rate Exertion 28
Maintenance & Care 29
Exploded View Diagram 35
Warranty 36

PRODUCT REGISTRATION

Congratulations on your new Rower, and welcome to the XTERRA Fitness family!

Thank you for your purchase of this quality unit from XTERRA Fitness. Your new unit was manufactured by one of the leading fitness manufacturers in the world and is backed by one of the most comprehensive warranties available. XTERRA Fitness will do all we can to make your ownership experience as pleasant as possible for many years to come.

If you have questions, or if parts are missing or damaged, or you require customer service, call (870) 336-4286. Please have your model number and serial number handy when you call.

Please take a moment at this time to record the name of the dealer, their telephone number, and the date of purchase below to make any future, needed contact easy. We appreciate your support and we will always remember that you are the reason that we are in business.

Serial Number	
Date of Purchase	
Dealer / Place of Purchase	

WARRANTY REGISTRATION

Use your smartphone to scan the QR code above to quickly and easily register your new XTERRA Fitness machine.

You can also go to **xterrafitness.com/warranty** under the Support tab to register online.

Version: 1.0
Revision: 07.14.2026

PRODUCT LABELS

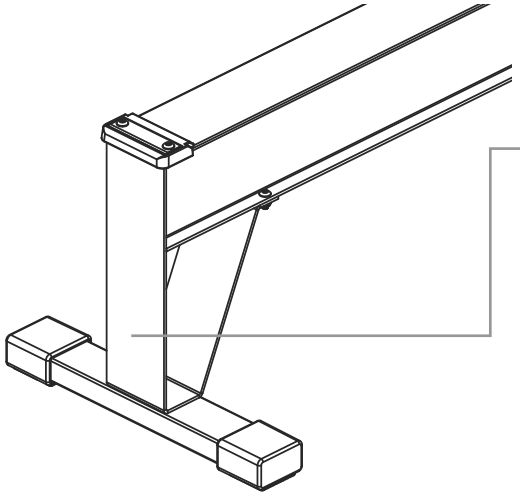



SERIAL NUMBER STICKER

This sticker will be found on the rear stabilizer. Please record the number below the barcode for the purpose of registering your rower's warranty.



PROPOSITION 65 WARNING

This sticker will be found near the rear stabilizer. The State of California requires us to inform you that this unit was manufactured using chemicals that could cause harm with improper use.

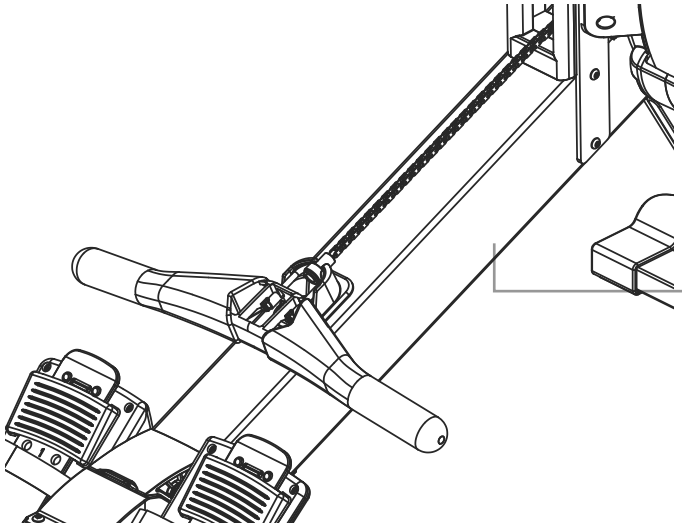

SAFETY WARNING STICKER

This sticker will be found on the center frame, near the pedals. The same warning can be found in this manual. Please read and be aware of the precautions before operating your unit.

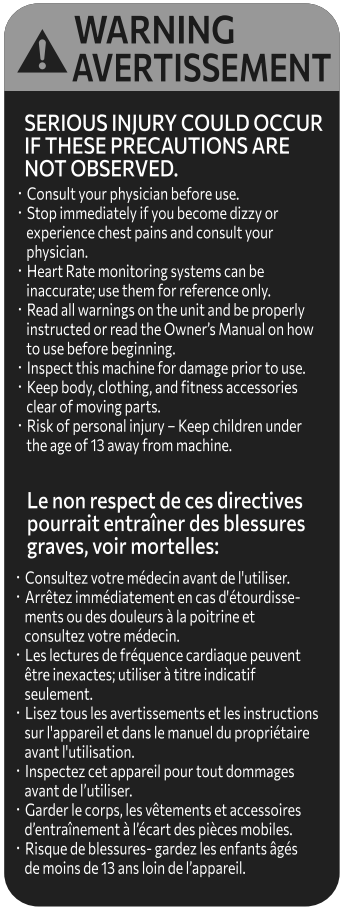

WARNINGS, COMPLIANCE AND NOTICES

This product has been certified to meet the following standards:

- FCC part 15
- Bluetooth (with FTMS)

This device complies with part 15 of the FCC Rules. Operation is subject to the following two conditions: (1) this device must not cause harmful interference, and (2) this device must not accept any interference received, including interference that may cause undesired operation.

NOTE: This equipment has been tested and found to comply with the limits for a Class B digital device, pursuant to Part 15 of the FCC Rules. These limits are designed to provide reasonable protection against harmful interference in a residential installation. This equipment generates, uses and can radiate radio frequency energy and, if not installed and used in accordance with the instructions, may cause harmful interference to radio communications. However, there is no guarantee that interference will not occur in a particular installation. If this equipment does cause harmful interference to radio or television reception, which can be determined by turning the equipment off and on, the user is encouraged to try to correct the interference by one or more of the following measures:

1. Reorient or relocate the receiving antenna.
2. Increase the separation between the equipment and receiver.
3. Connect the equipment to an outlet on a circuit different from that to which the receiver is connected.
4. Consult the dealer or an experienced radio/TV technician for help.

CAUTION:

- To comply with FCC RF exposure compliance requirements, a separation distance of at least 20 cm must be maintained between the antenna of this device and all persons.
- This transmitter must not be co-located or operating in conjunction with any other antenna or transmitter

SAFETY INSTRUCTIONS

When using an appliance, basic precautions should always be followed, including the following:

Read all instructions before using this appliance.
Failure to follow all guidelines may compromise the effectiveness of the exercise experience, expose yourself (and possibly others) to injury, and reduce the longevity of the equipment.

WARNING - To reduce the risk injury to persons:

1. To reduce the risk of serious injury, read the following Safety Instructions before using the ROWER.
2. Save these instructions and ensure that other exercisers read this manual prior to using the ROWER for the first time.
3. Read all warnings and cautions posted on the ROWER.
4. The ROWER should only be used after a thorough review of the Owner's Manual. Make sure that it is properly assembled and tightened before use.
5. We recommend that two people be available for assembly of this product.
6. Keep children away from the ROWER. Do not allow children to use or play on the ROWER. Keep children and pets away from the ROWER when it is in use.
7. It is recommended that you place this exercise equipment on an equipment mat.
8. Set up and operate the ROWER on a solid level surface. Do not position the ROWER on loose rugs or uneven surfaces.
9. Make sure that adequate space is available for access to and around the ROWER.
10. Before using, inspect the ROWER for worn or loose components, and securely tighten or replace any worn or loose components prior to use.
11. Before using, check the condition of the Chain (10). Replace the Chain (10) if it is cracked or broken.
12. Consult a physician prior to commencing an exercise program and follow his/her recommendations in developing your fitness program. If at any time during exercise you feel faint, dizzy, or experience pain, stop and consult your physician. Failure to follow all warnings and instructions could result in serious injury or death.
13. Always choose the workout which best fits your physical strength and flexibility level. Know your limits and train within them. Always use common sense when exercising.
14. Do not wear loose or dangling clothing while using the ROWER.
15. Never exercise in bare feet or socks; always wear proper footwear such as running, walking, or cross training shoes that fit well, provide foot support, and feature non-skid rubber soles.
16. Be careful to maintain your balance while using, mounting, dismounting, or assembling the ROWER, loss of balance may result in a fall and bodily injury.
17. Do not use the Seat (59) to move the ROWER. The Seat (59) will move and the Seat Fixing Clip (78) may pinch your hand or fingers. When assembling or separating the unit, keep all children away and make sure your hands are clear of any pinch point.
18. The ROWER should be used by only one person at a time.
19. **User Weight Limit: 330 lb**

Please ensure that you review and adhere to the user weight restrictions and power requirements of your new machine. Failure to do so may result in serious injury or damage to your machine.

PARTS OF YOUR ROWER

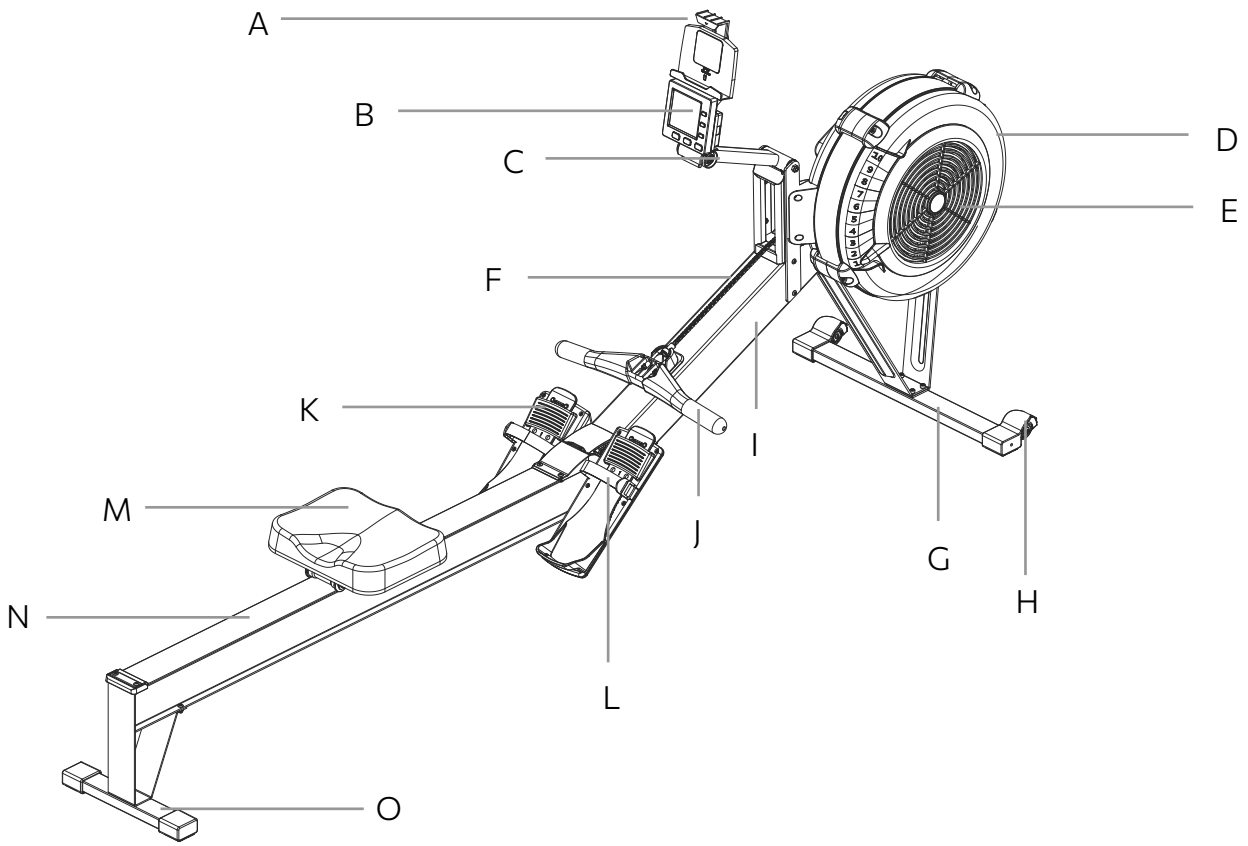

A. Tablet Rack / Pad Holder
B. Console
C. Console Monitor Post
D. Right Fan Shroud
E. Damper
F. Chain
G. Front Stabilizer
H. Transport Wheels
I. Main Frame
J. Handlebars
K. Pedals
L. Pedal Strap
M. Seat
N. Rail Frame
O. Rear Stabilizer

PARTS INCLUDED

TOOLS INCLUDED:

- ❑ Allen Wrench (5mm)
- ❑ Allen Wrench with Cross Head (5mm)



Allen Wrench (5mm)



Allen Wrench (5mm/Cross Head)

PARTS INCLUDED:

- ❑ Main Frame
- ❑ Slide Rail
- ❑ Front Stabilizer
- ❑ Rear Stabilizer
- ❑ Console

	PART#	DESCRIPTION	QTY
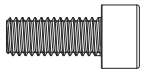	**106**	Socket Head Cap Screw, M6×15mm	**8**

After unpacking the unit, open the hardware bag and make sure that you have all the following fasteners. Some fasteners may be already attached to the parts.

ASSEMBLY

1. First, take out the packing materials **Styrofoam (A) and Styrofoam (B)**. Then flip them over so the sides with carved letter are facing up.

   Take the **Main Frame (1)** out from the carton and put it on both **Styrofoam (A& B)** as picture shown. The **Right and Left Fan Shrouds (4 & 5)** should be placed in the groove of **Styrofoam (A)**.

   NOTE: Fan Shrouds will be easily damaged if the whole product is placed on the ground directly during the assembly.

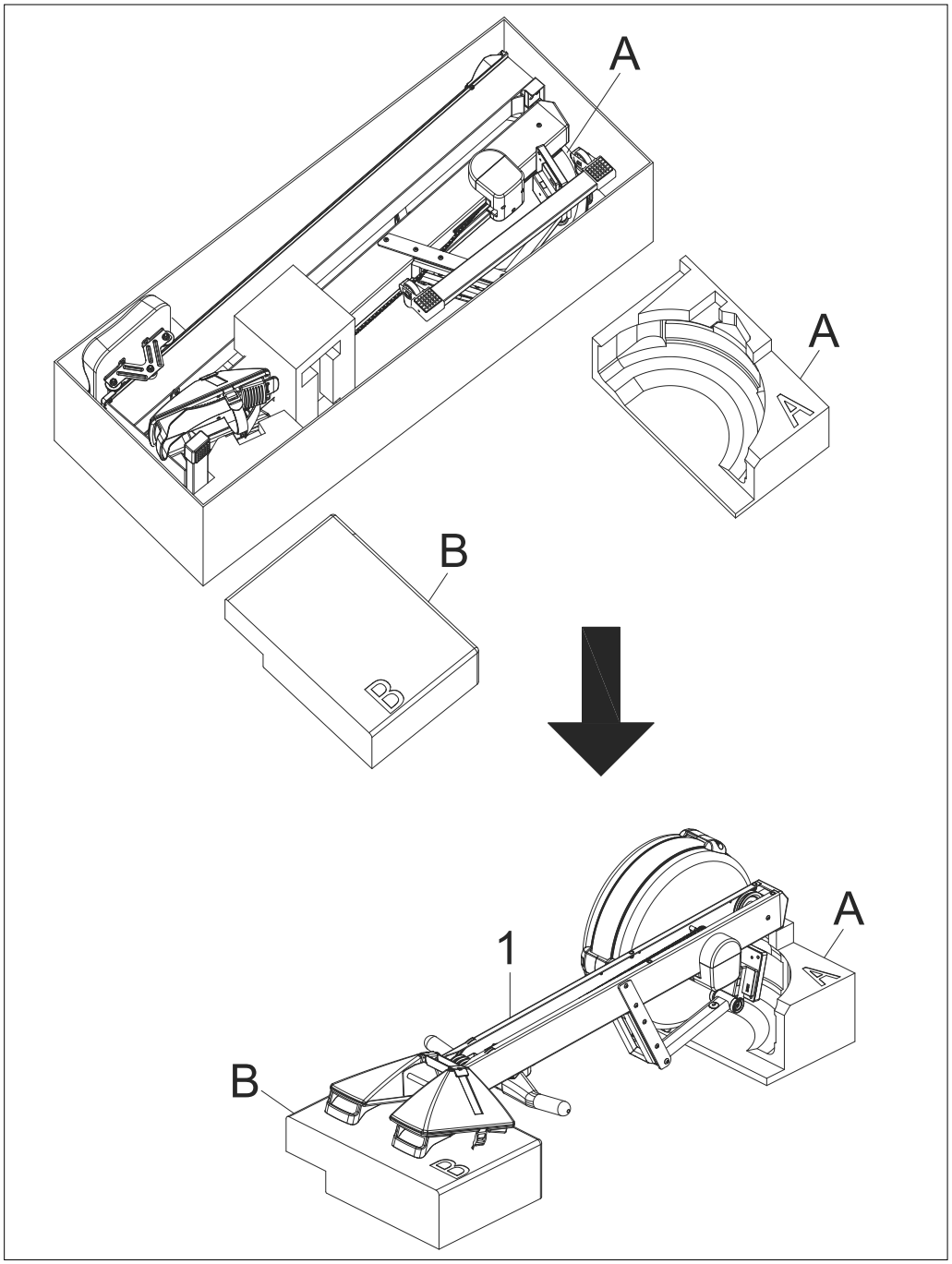

ASSEMBLY - CONTINUED

2. Attach the **Long Front Support Leg (53) and Short Front Support Leg (54)** to **Front Stabilizer (55)** using 4 PCs of **M6×15mm Cylindrical Head Hexagon Socket Screws (106)**.

NOTE: Do not fully tighten bolts until instructed.

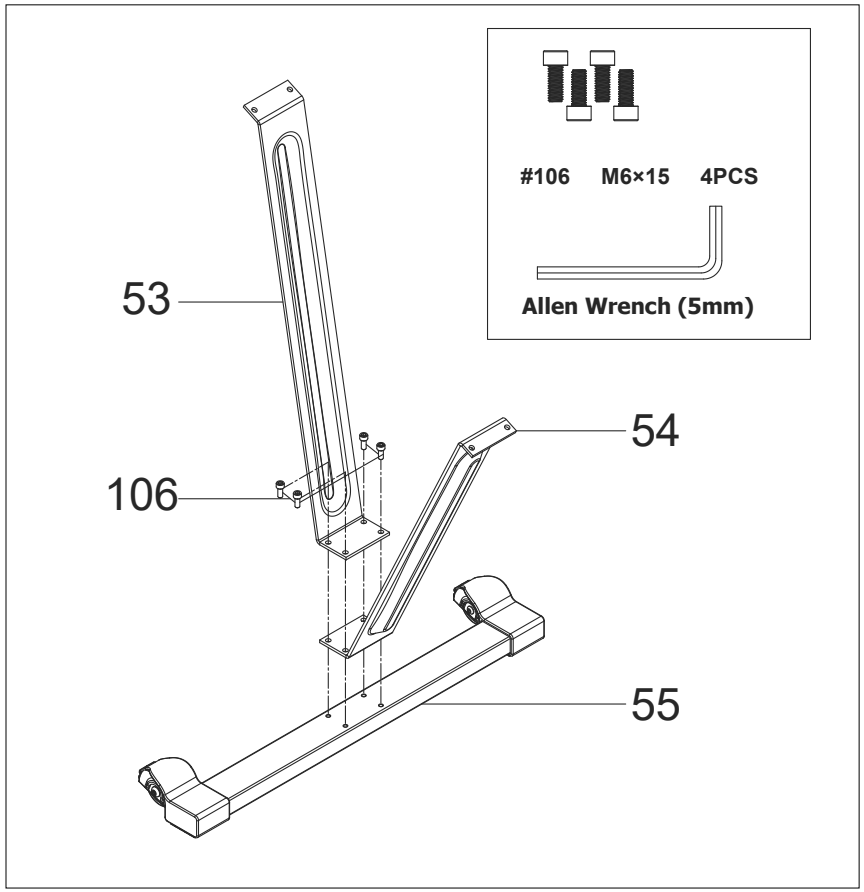

ASSEMBLY - CONTINUED

3. Attach **Front Long Front Support Leg (53)** and S**hort Front Support Leg (54)** to **Main Frame (1)** using 4 PCs of **M6×15mm Cylindrical Head Hexagon Socket Screws (106)**.

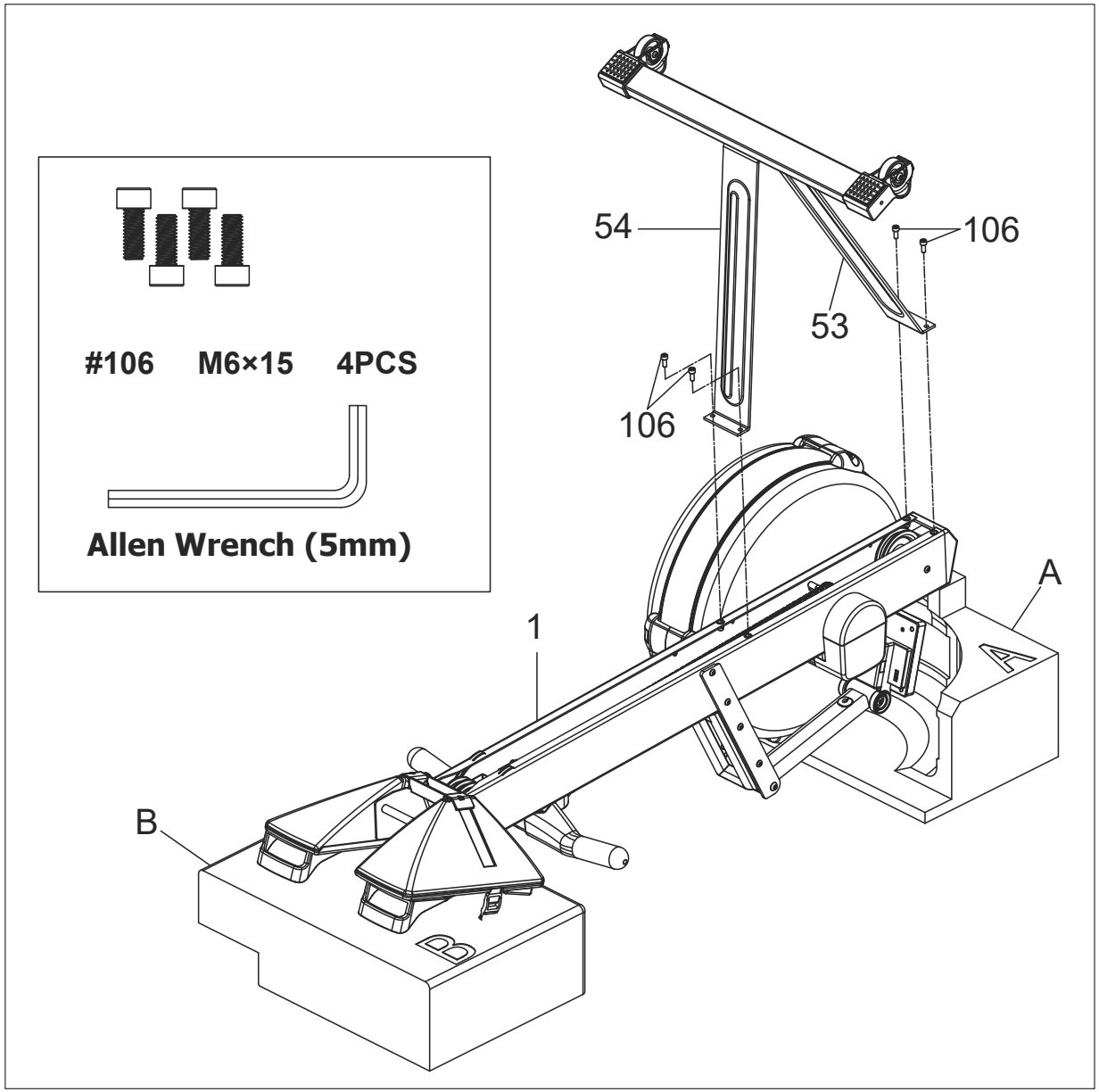

ASSEMBLY - CONTINUED

4. Adjust the **Console Monitor Post (52)** and the **Console Monitor (51)** to the appropriate position.

Install the **Pad Holder (50)** onto the **Console Monitor (51)** and secure it with 2 **Cross Half-round Head Screws (113)**.

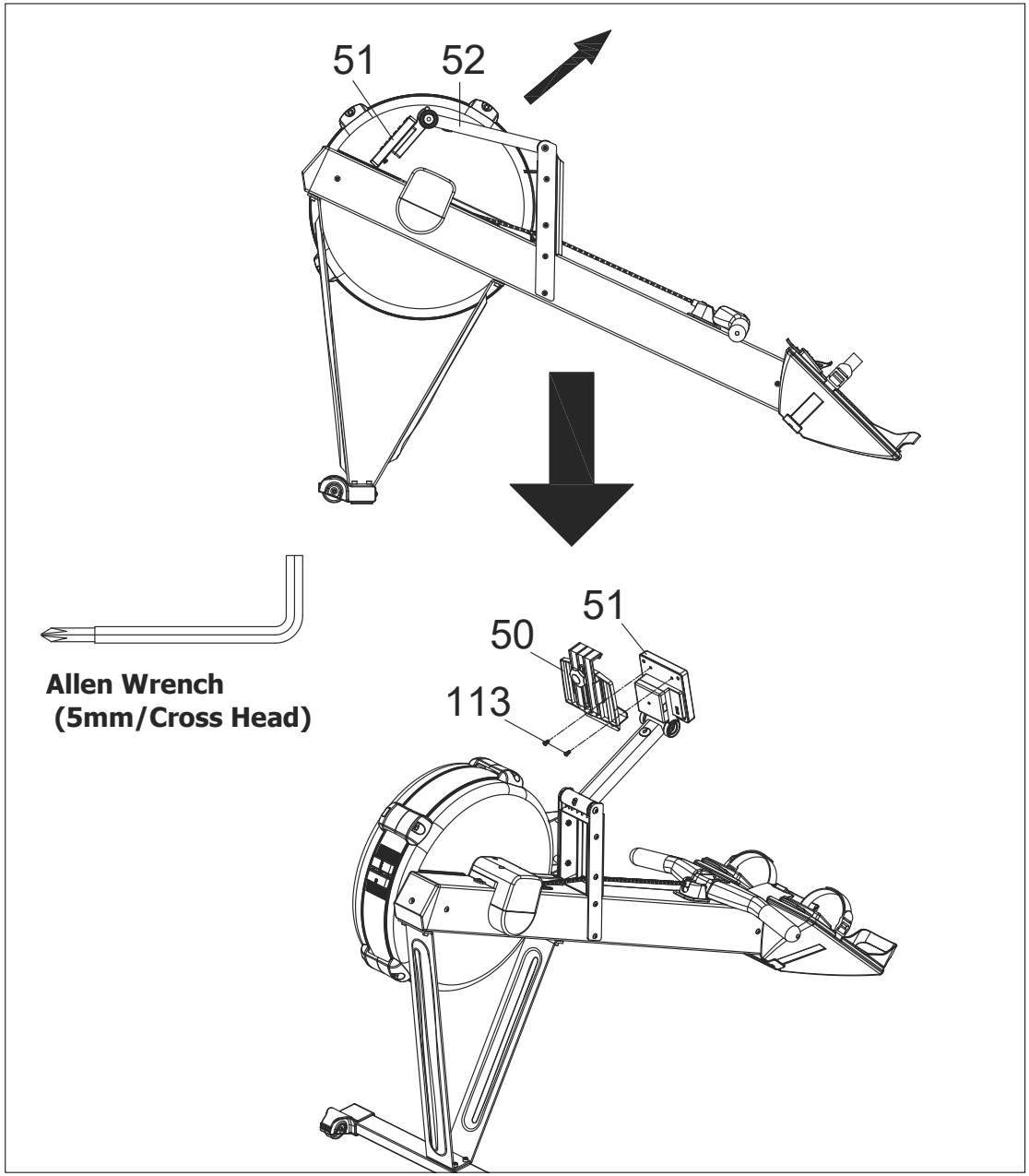

ASSEMBLY - CONTINUED

5. Set **Main Frame (1)** on the ground as the picture shows, use your left hand grab the strap on the left pedal to lift up the backside of **Main Frame**.

Then attach the front side of **Rail (58)** to the backside of **Main Frame (1)**. Lower the **Main Frame (1)** slowly and finish the assembly of the **Aluminum Rail.**

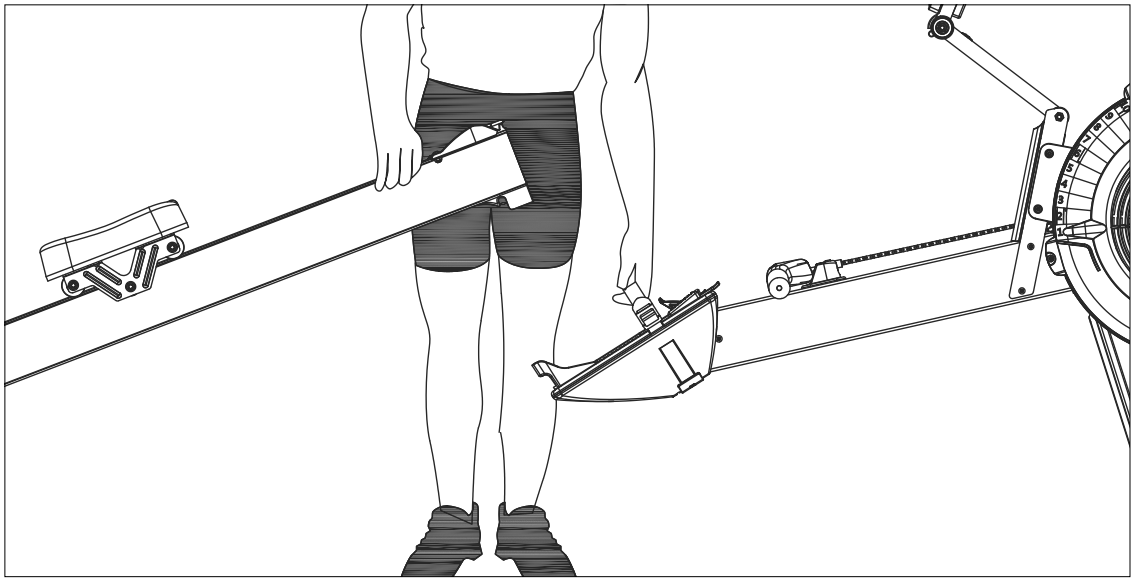

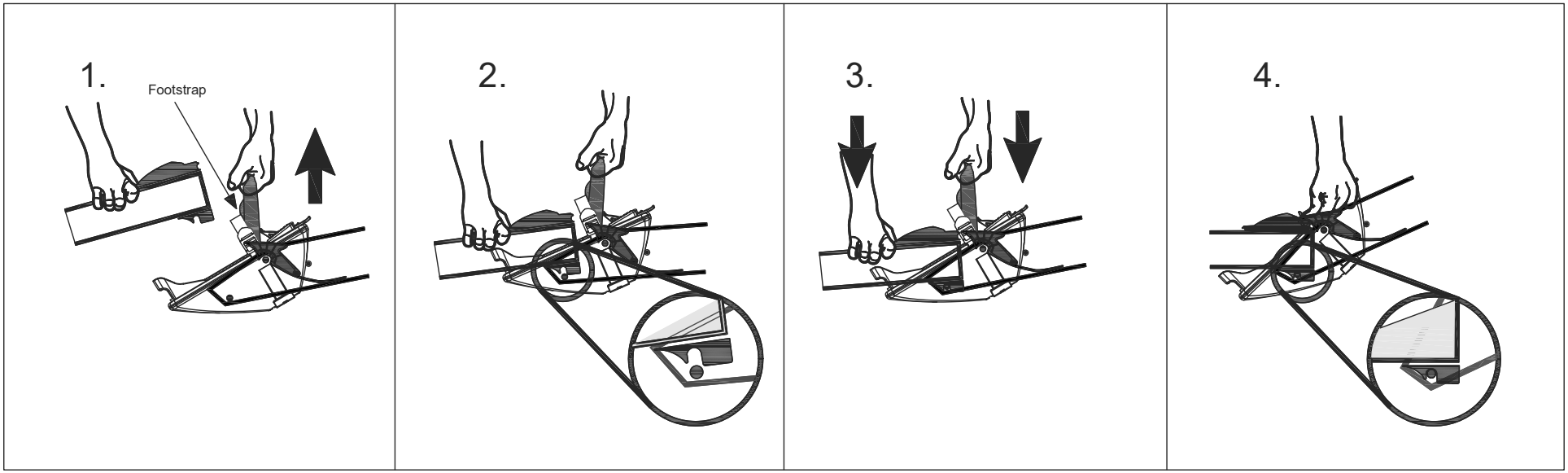

ASSEMBLY - CONTINUED

6. Assembling Batteries

NOTE: Use 1.5 volt alkaline D Cell (LR20) batteries. Do not use lithium or 3.6 volt batteries, as there is risk of fire or explosion. Remove batteries when not in use for a period of four months or more.

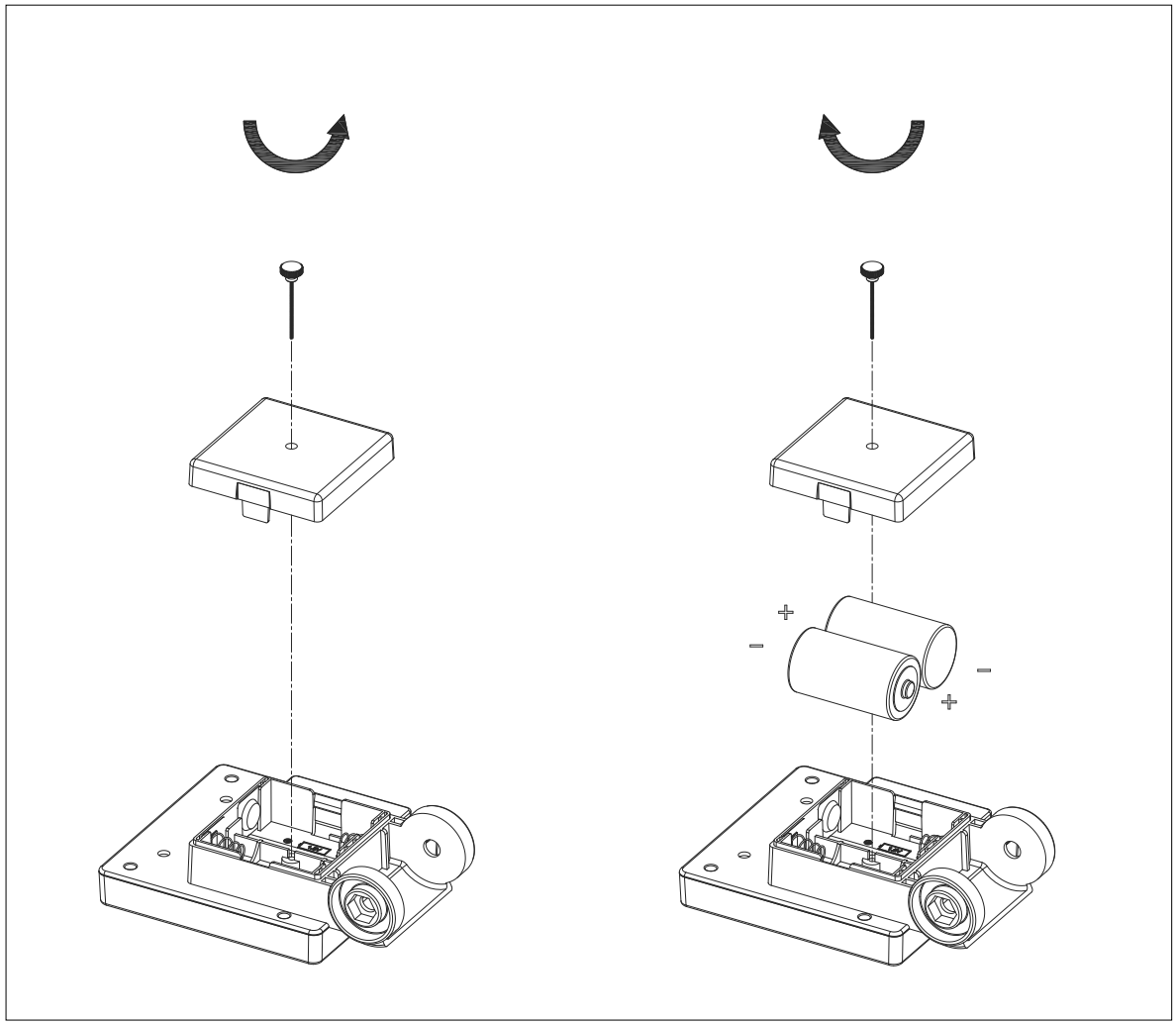

ADJUSTING YOUR MACHINE

Load Adjustment

There is a **Damper (6)** built into the **Right Fan Shroud (5)**. Move the Indicator in the **Damper (6)** to point to the numbers on the **Right Fan Shroud (5)** to adjust the load. There are settings from 1 to 10. Setting #1 will provide the lowest resistance. Setting #10 will provide the highest resistance.

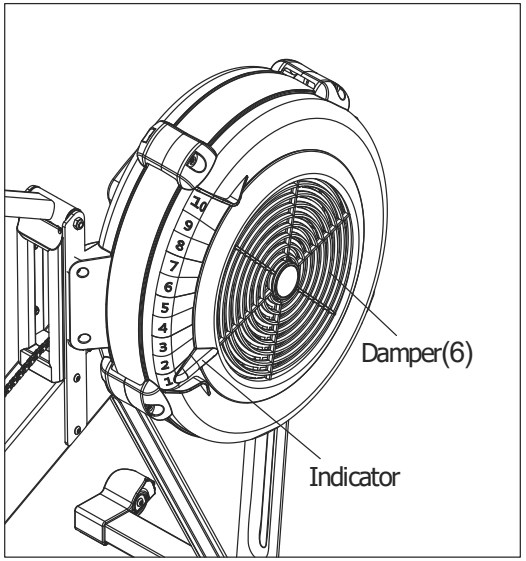

Handlebar Position

You can place the **Handlebar (9)** on the **Handlebar Holder (25)**.

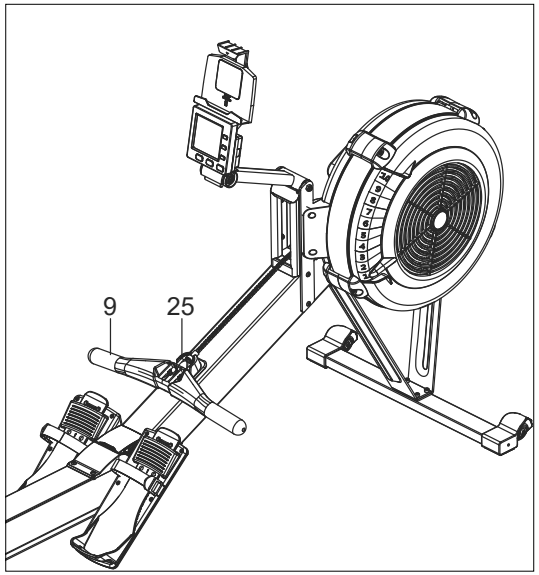

Pedal Cap Adjustment

The position of the **Pedal (62)** can be adjusted. Refer to the illustration. Pull the **Pedal (62)** out from the two bulges in the **Left Pedal Cage (61)** or the **Right Pedal Cage (64),** then lower or raise the **Pedal (62)** to the desired position. Lock the **Pedal (62)** in position by pressing the adjustment holes of the desired position onto the two bulges.
Refer to the numbers on the **Pedal (62)** to make sure that **Pedal (62)** are adjusted on the same position on both sides.

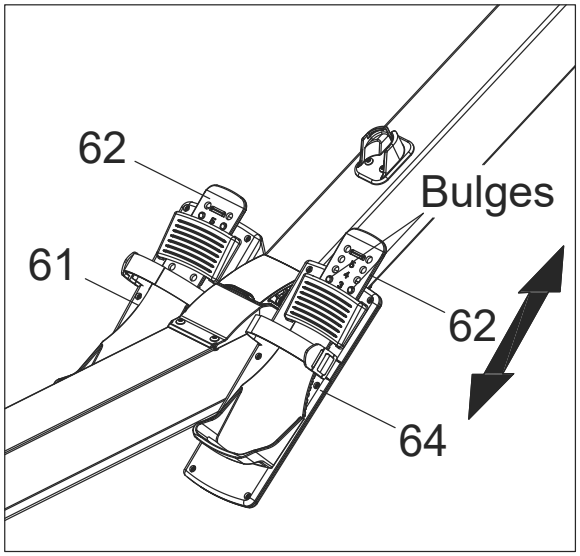

ADJUSTING YOUR MACHINE - CONTINUED

Storage

The front stabilizer has built-in transport wheels. Stand at the front of the machine and lift it up until the weight of the machine is transferred to the transport wheels. You can now easily move the machine to a new location.

Do not stand rower up on end as the monorail will separate.

Moving parts, such as the seat, could crush and cut your body. Please do not touch the slide rail when using the machine!

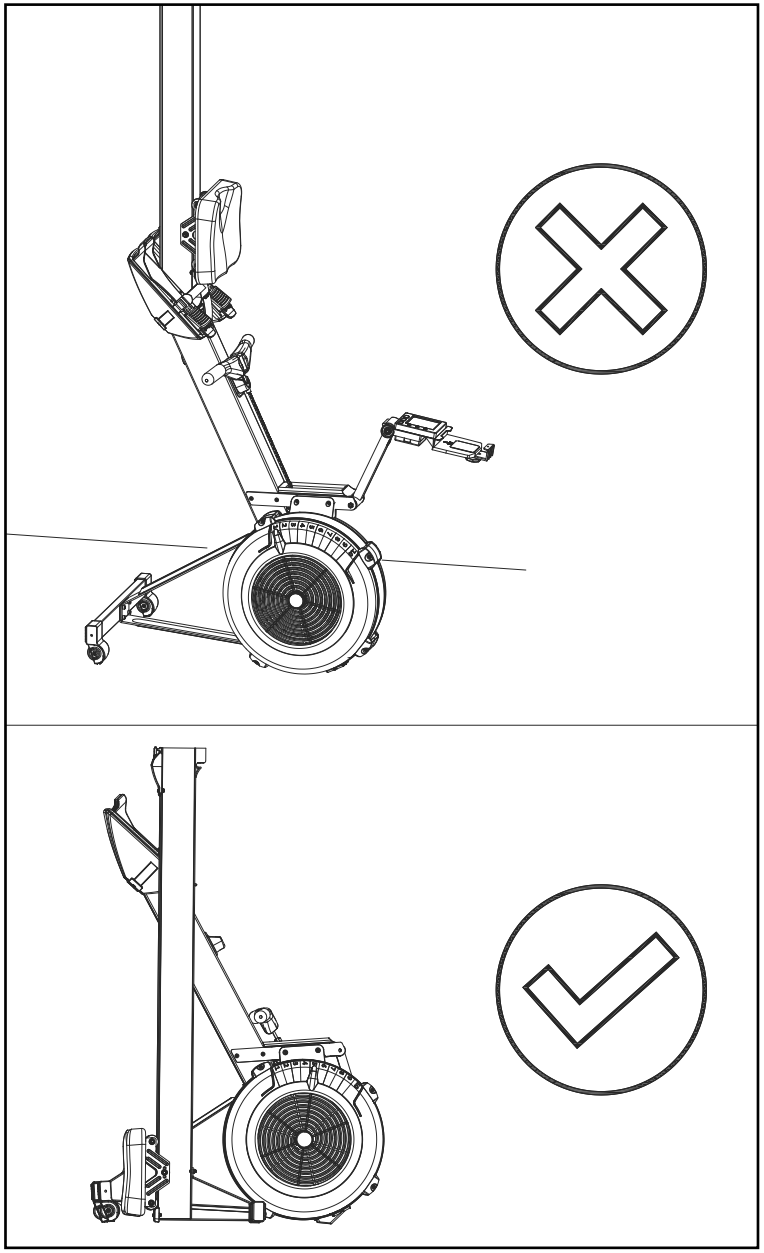

ADJUSTING YOUR MACHINE - CONTINUED

Tablet Rack / Pad Holder

The **Pad Holder Clip (50-1)** can move up and down. Move up the Pad Holder Clip then slide the Cell Phone into the gap between the **Pad Holder (50)** and the **Pad Holder Clip (50-1)**. Move down the **Pad Holder Clip (50-1)** to clip the Cell Phone in position.

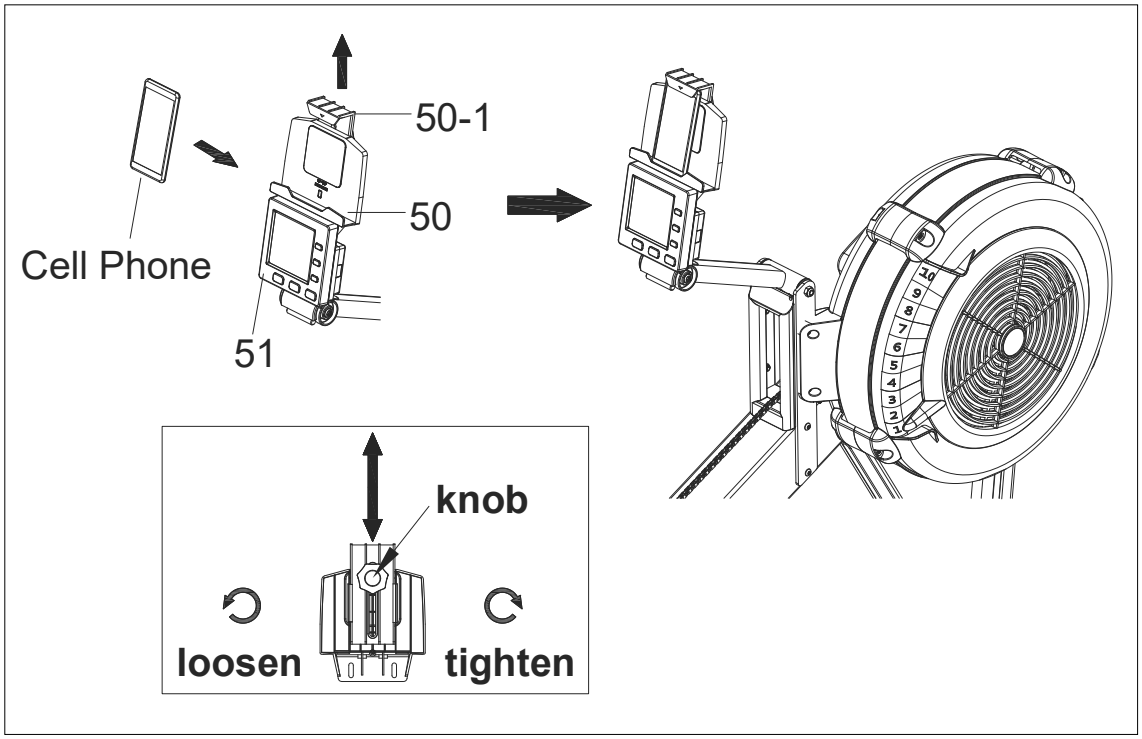

Console Monitor Post Adjustment

Hold the **Console Monitor (51)** by 2 hands, then adjust the **Upper Console Monitor Post (52)** up and down to the best position for you.

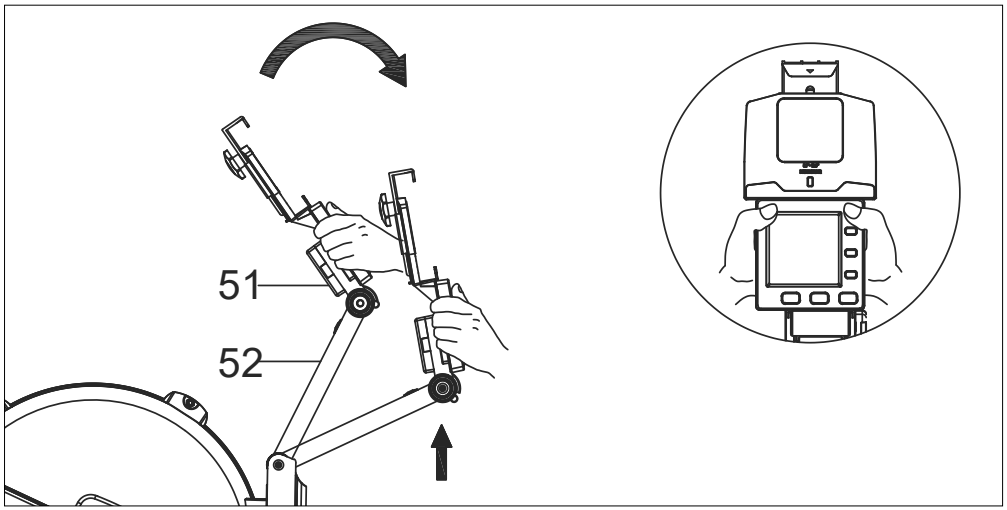

ABOUT YOUR MACHINE

Always use care and caution when operating your machine. Follow instruction in this manual to ensure safe operation and maintenance of your rower

Your new XTERRA Fitness rower has Bluetooth connectivity to give you access to the most advanced workout experiences available. Follow the instructions on page 19 to learn more about using the Bluetooth capabilities to their fullest potential.

Downloading the XF Connect app will help unlock more features - such as tracking workouts and sharing data via Google Fit and Apple Fitness. Simply search for "**XF Connect**" in the app store on your smartphone or tablet, or scan the QR code on the right



The **XF Connect** app is available on Google Play and the Apple App Store. Scan the QR Code below, and quickly and easily sign up to start taking your workout experience to a whole new level.

Available on the App Store

GET IT ON Google play

Be sure to follow XTERRA Fitness on your favorite social media platforms to view and share the latest fitness videos, images, and news.

facebook.com/XterraFitness

www.instagram.com/XterraFitness

youtube.com/user/XterraFitnessOnline

APP CONNECTION

This console connects to 3rd party fitness apps on your phone or tablet via Bluetooth. Once console is connected to your phone or tablet via Bluetooth, the console will not display. Your workout feedback will be displayed on your device.

1. Working frequency:this wireless transmitter is a Bluetooth 4.2 device.Its working frequency is 2.4GHZ.
2. Requirements for Cell-phone APP Installation:
3. IOS cell-phone system should be no lower than 7.1 version and support Bluetooth 4.2, iphone 4s and beyond.
4. For Android, a system no lower than 4.3 is required and the cell-phone shall support bluetooth 4.2.
5. To ensure the data record is real and effective at the cell-phone end, the wireless transmitter records and sends the data of the user to cell-phone APP only when Bluetooth computer and the cell-phone are connected. First connect the APP to the Bluetooth computer before starting the sports equipment to ensure the trueness and effectiveness of the data recorded in cell-phone APP.
6. The computer will go into Sleep mode if it receives no signal input in 3 minutes. In Sleep mode, computer is unavailable for cell-phone. At this time, consumers need to press the button or use a rower to wake up the computer.
7. When the computer is successfully connected to the app, the computer will turn off the display and all data will be displayed on the app.
8. After connecting the app, if you need to reuse the computer, you need to exit the app and turn off the Bluetooth of the mobile phone.

KINOMAP

1. Open the Kinomap App and click in the lower right corner to add devices.
2. Click equipment management, then click the “+” to start adding equipment.
3. Click the “Rower” graphic, then scroll through brand connection screen to find and select FTMS or XTERRA.
4. Select Rower Machine, then Bluetooth device.
5. Press the Home Button to return to the Home screen after adding the device.
6. To select a training video, you must select the type of walk and press the button to enter the training screen.
7. When stop exercising for 4 seconds, the display will stop calculating and a ”STOP” will be displayed.
8. From the pause screen you can continue the workout or exit to end the workout.

Note: This machine is compatible with other 3rd party fitness apps using FTMS protocol.

1. If the battery icon on the display interface is lit, please replace the batteries.
2. The monitor will automatically shut off if there is no signal received and no operation (about 3 minutes).
3. The monitor will be autopowered on when starting to exercise or push button signal in.
4. The monitor will automatically start calculating when you start to exercise and will stopcalculating when you stop exercising for 4 seconds.
5. Press any button to turn on the computer backlight, and the backlight will automatically turn off and enter the energy-saving mode after about 8 seconds of no button operation.
6. When the computer is connected to the APP, if it remains inactive for a long time, it will automatically force disconnect from the APP after 90 seconds and return to normal operation.

CONSOLE SCREEN - OVERVIEW

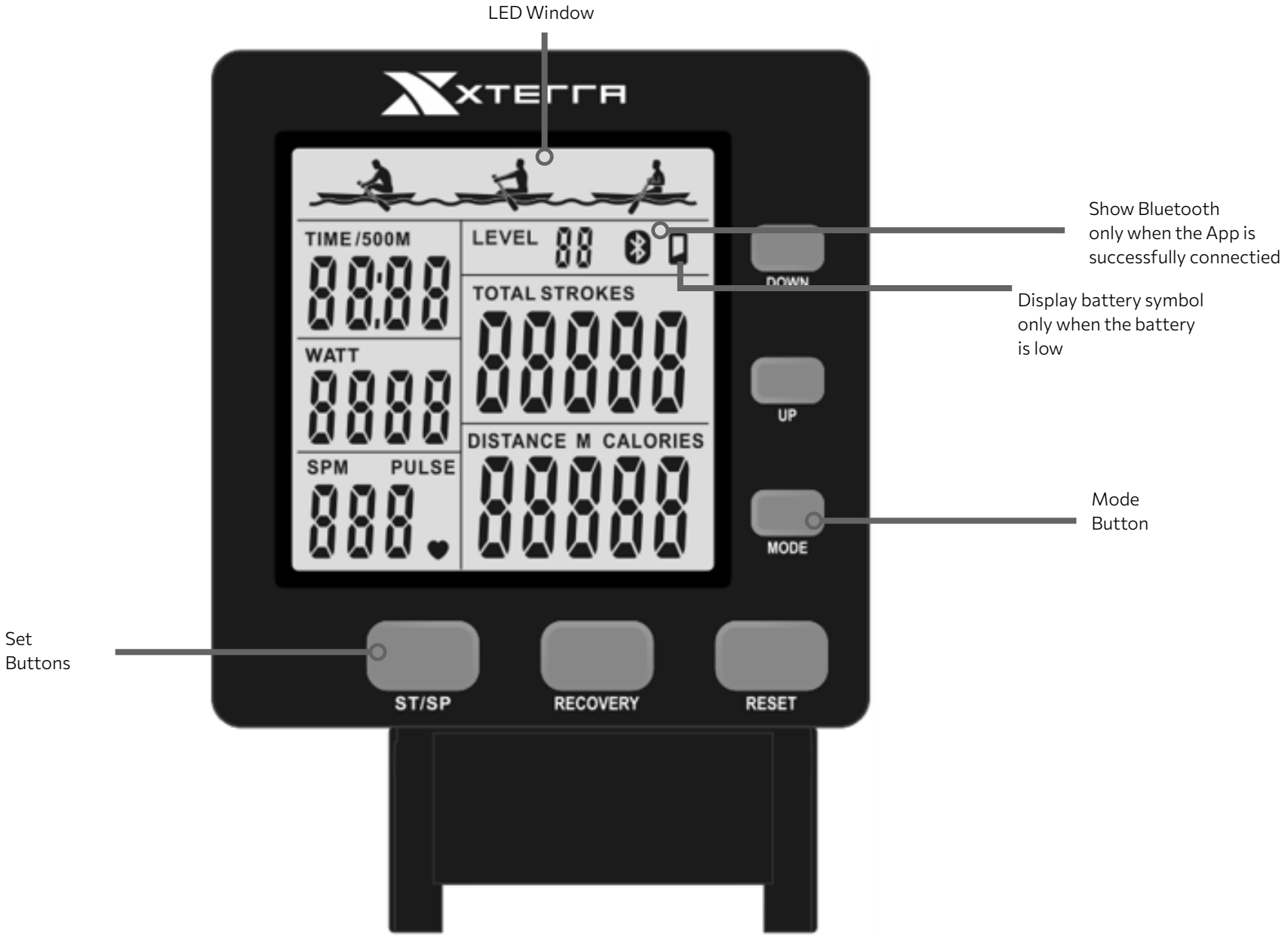

CONSOLE SCREEN - FUNCTION

Your AIR ROWER utilizes an air fan system to create resistance for your workout. We recommend that you use this computer console to vary your workout from session to session and note your progress toward your fitness goals. When used regularly in this way, the computer console can become an important source of motivation which will help keep you on track.

Down
Press to decrease the preset values. Press the button and hold it down, the presetting value will go faster, release the button to stop.

Up
Press to increase the preset values. Press the button and hold it down, the presetting value will go faster, release the button to stop.

Mode
In pause mode: the single-machine switching function displays the interface to the view motion data. In start mode: the single-machine switch can target value in motion state (time is counting): the single machine switch function displays the interface view motion data.

Reset
Press the mode button to switch to the target function, and then press the reset button to reset the function value (time, strokes, distance, calories and pulse). Press and hold the reset button for about 2 seconds to restart the computer, and all values of the computer will be reset (except the total strokes, which will return to zero after the battery is reinstalled)

Recovery
Press this button to test the pulse recovery ability of the user. After a period of exercise you still need to wear the bluetooth heartbeat chest strap (not included). When the compuer has pulse value display, press this button to start the pulse recovery function. The computer will enter the 60 second countdown. After the countdown, the user's pulse recovery status will be displayed on the screen. The recovery status represented by the F value is as follows: (Press the reset button to switch back to the main display screen.)
F1: means Outstanding
F2: means Excellent
F3: means Good
F4: means Fair
F5: means Below Average
F6: means Poor

ST / SP
Click to toggle between start mode and pause mode:
In start mode: Normal exercise counting or exercise with a set target value.
In pause mode: Press the mode key to switch the display interface and view the datafor each function.

CONSOLE SCREEN - FUNCTION

Time
-Displays the user's exercise time.

Time / 500M
-Displays the time required for the user to exercise 500m.

Watt
-Displays the user's exercise power.

SPM
-Displays the strokes per minute.

Pulse
-Display the user's heart rate value.

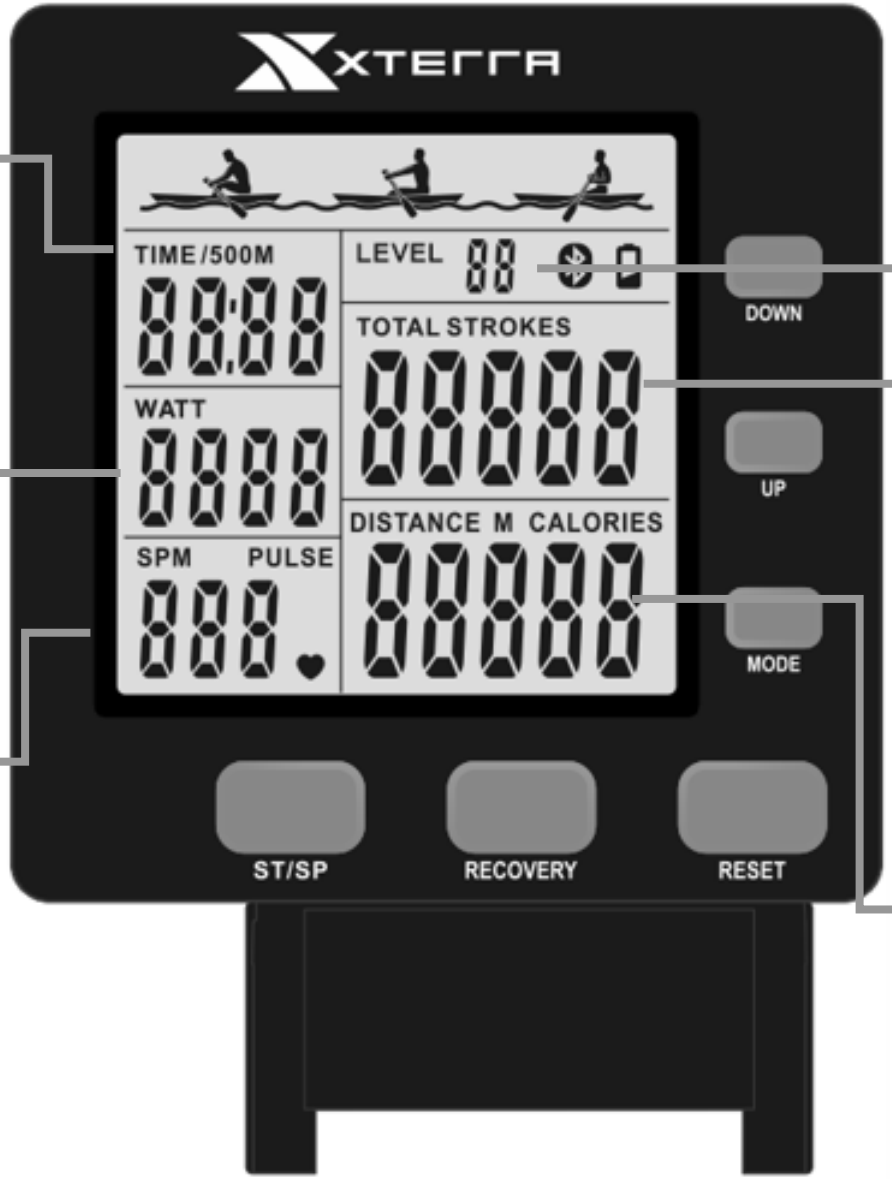

Level
-Level display

Strokes
-Displays the number of times the user exercises.

Total Strokes
-Displays the cumulative number of times the user has exercised for many times. After the battery is reinstalled, the value is reset.

Distance
-Displays the distance the user exercises.

Calories
-Displays the calorie value consumed by the user during exercise.

SPECIFICATIONS

Function	Time	0:00 - 99:59
	Time / 500M	0:00 - 99:59
	Strokes	0 - 65535 Times
	Total Strokes	0 - 65535 Times
	Distance	0 - 65535 Meters
	Watt	0 - 999 W
	Calories	0 - 65535 Cal
	SPM	0 - 999 Times / Min
	Pulse	60 - 240 BPM
Battery Type		2pcs of D batteries
Operating Temperature		32F - +104F
Storage Temperature		14F - +140F

TARGET TRAINING SETTINGS

This computer has five target training modes: time, strokes, distance, calories and pulse (Set when stopping exercise).

1. **TIME** target training mode:first press the "MODE" button to switch to the "TIME" function, and then press the "UP" and “DOWN” button to set the target time (Press and hold the up and down button to speed up the setting).when it reaches the required time, stop the button. Then start to use the machine, and the display will start to count down. When the count down reaches zero, the computer will sound an alarm to remind the user that the training goal is completed. if you continue to train, the computer will automatically start to count up from zero.
2. **STROKES** target training mode: first press the "MODE" button to switch to the "STROKES" function, and then press the "UP" and “DOWN” button to set the target strokes (Press and hold the up and down button to speed up the setting).when it reaches the required strokes, stop the button. Then start to use the machine, and the display will start to count down. When the count down reaches zero, the computer will sound an alarm to remind the user that the training goal is completed. if you continue to train, the computer will automatically start to count up from zero.
3. **DISTANCE** target training mode: first press the "MODE" button to switch to the "DISTANCE" function, and then press the "UP" and “DOWN” button to set the target distances (Press and hold the up and down button to speed up the setting).when it reaches the required distances, stop the button. Then start to use the machine, and the display will start to count down. When the count down reaches zero, the computer will sound an alarm to remind the user that the training goal is completed. if you continue to train, the computer will automatically start to count up from zero.
4. **CALORIES** target training mode: first press the "MODE" button to switch to the "CALORIES" function, and then press the "UP" and “DOWN” button to set the target calories (Press and hold the up and down button to speed up the setting).when it reaches the required calories, stop the button. Then start to use the machine, and the display will start to count down. When the count down reaches zero, the computer will sound an alarm to remind the user that the training goal is completed. if you continue to train, the computer will automatically start to count up from zero.
5. **PULSE** target training mode: first press the "MODE" button to switch to the "PULSE" function, and then press the "UP" and “DOWN” button to set the target pulse (Press and hold the up and down button to speed up the setting). when it reaches the required pulse, stop the button. Then start to use the machine, When the user's pulse is higher than the target pulse, the computer will give an alarm.

During the setting process, if you want to modify the target value, press the reset button to clear the current setting or press and hold the reset button for about 2 seconds to clear all target values, and then reset according to the above description.

HEART RATE CHEST STRAP* (NOT INCLUDED)

1. Attach the transmitter to the elastic strap using the interlocking key.
2. Adjust the strap as tightly as possible as long as the strap is not too tight to remain comfortable.
3. Position the transmitter with the logo centered in the middle of your torso facing away from your chest (some people must position the transmitter slightly left of center). Attach the final end of the elastic strap by inserting the round end and, using the locking parts, secure the transmitter and strap around your chest.
4. Position the transmitter directly below the pectoral muscles.
5. Sweat is the best conductor to measure very minute heart beat electrical signals. However, plain water can also be used to pre-wet the electrodes (2 ribbed oval areas on the reverse side of the belt and both sides of the transmitter). It's also recommended that you wear the transmitter strap a few minutes before your work out. Some users, because of body chemistry, have a more difficult time in achieving a strong, steady signal at the beginning. After "warming up", this problem lessens.
6. Your workout must be within range - distance between transmitter/receiver – to achieve a strong steady signal. The length of range may vary somewhat but generally stay close enough to the console to maintain good, strong, reliable readings. Wearing the transmitter directly on bare skin assures you of proper operation. If you wish, you may wear the transmitter over a shirt. To do so, wet the areas of the shirt that the electrodes will rest upon.

Note: The transmitter is automatically activated when it detects activity from the user's heart. Additionally, it automatically deactivates when it does not receive any activity. Although the transmitter is water resistant, moisture can have the effect of creating false signals, so you should take precautions to completely dry the transmitter after use to prolong battery life (estimated transmitter battery life is 2500 hours). The replacement battery is Panasonic CR2032.

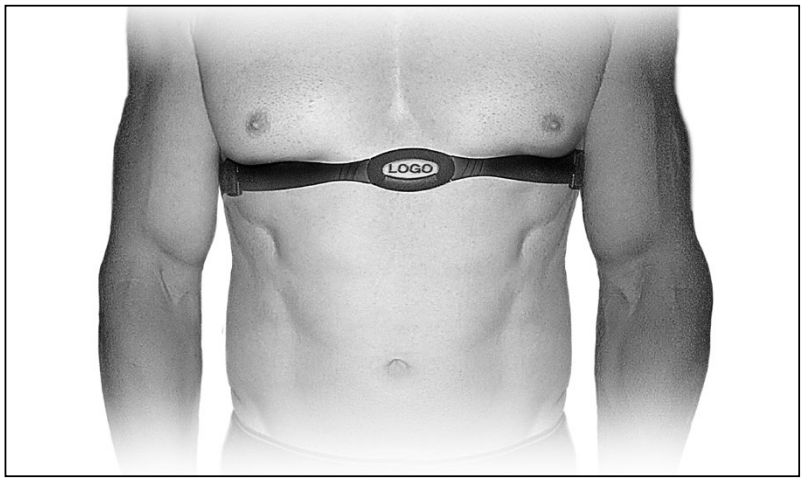

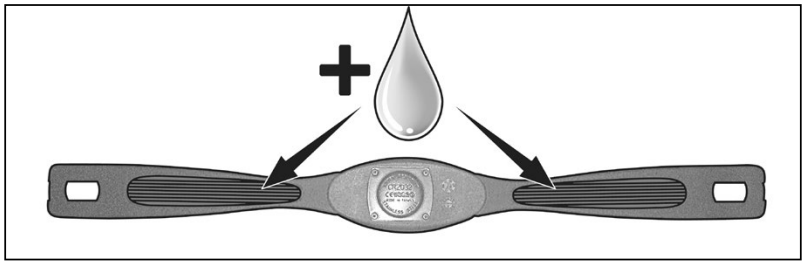

CHEST STRAP WARNING* (NOT INCLUDED)

Erratic Operation

Caution! Do not use this rower for Heart Rate programs unless a steady, solid Actual Heart Rate value is being displayed. High, wild, random numbers being displayed indicate a problem.

Areas to look for interference which may cause erratic heart rate:

1. Microwave ovens, TV's, small appliances, etc.
2. Fluorescent lights.
3. Some household security systems.
4. Perimeter fence for a pet.
5. Some people have problems with the transmitter picking up a signal from their skin. If you have problems try wearing the transmitter upside down. Normally the transmitter will be oriented so the XTERRA Fitness logo is right side up.
6. The antenna that picks up your heart rate is very sensitive. If there is an outside noise source, turning the whole machine 90 degrees may de-tune the interference.
7. Another Individual wearing a transmitter within 3' of your machine's console.

If you continue to experience problems contact XTERRA Fitness.

HEART RATE EXERTION

The old motto, “no pain, no gain”, is a myth that has been overpowered by the benefits of exercising comfortably. A great deal of this success has been promoted by the use of heart rate monitors. With the proper use of a heart rate monitor, many people find that their usual choice of exercise intensity was either too high or too low and exercise is much more enjoyable by maintaining their heart rate in the desired benefit range.

To determine the benefit range in which you wish to train, you must first determine your Maximum Heart Rate. This can be accomplished by using the following formula: 220 minus your age. This will give you the Maximum Heart Rate (MHR)for someone of your age. To determine the effective heart rate range for specific goals you simply calculate a percentage of your MHR. Your Heart rate training zone is 50% to 90% of your maximum heart rate. 60% of your MHR is the recommended for burning fat while 80% is recommended for strengthening the cardio vascular system. This 60% to 80% is the zone to stay in for maximum benefit.

For someone who is 40 years old their target heart rate zone is calculated:
220 – 40 = 180 (maximum heart rate)
180 x .6 = 108 beats per minute (60% of maximum)
180 X .8 = 144 beats per minute (80% of maximum)
So for a 40 year old the training zone would be 108 to 144 beats per minute.

If you enter your age during programming the console will perform this calculation automatically. Entering your age is used for the Heart Rate programs. After calculating your MHR you can decide upon which goal you would like to pursue.

The two most popular reasons for, or goals, of exercise are cardiovascular fitness (training for the heart and lungs) and weight control. If your goal is cardiovascular fitness or if it is weight loss, it can be achieved by training at 80% or 60%, respectively, of your MHR on a schedule approved by your physician. Consult your physician before participating in any exercise program.

With this XTERRA Fitness unit you may use the heart rate monitor feature without using the Heart Rate program.

HEART RATE - PERCEIVED EXERTION

Heart rate is important but listening to your body also has a lot of advantages. There are more variables involved in how hard you should workout than just heart rate. Your stress level, physical health, emotional health, temperature, humidity, the time of day, the last time you ate and what you ate all contribute to the intensity at which you should workout. If you listen to your body it will tell you all of these things.

The rate of perceived exertion (RPE), also known as the Borg scale, was developed by Swedish physiologist G.A.V. Borg.
This scale rates exercise intensity from 6 to 20 depending upon how you feel or the perception of your effort.
The scale is found to the side of the page:

You can get an approximate heart rate level for each rating by simply adding a zero to each rating. For example a rating of 12 will result in an approximate heart rate of 120 beats per minute. Your RPE will vary depending on the factors discussed earlier. If your body is strong and rested, you will feel strong and your pace will feel comfortable. When your body is in this condition, you are able to train harder and the RPE will support this. If you are feeling tired and sluggish, it is because your body needs a break. In this condition, your pace will feel difficult. Again, this will show up in your RPE and you will train at the proper level for that day.

Rating Perception of Effort

6	Minimal
7	Very, Very Light
8	Very, Very Light +
9	Very Light
10	Very Light +
11	Fairly Light
12	Comfortable
13	Somewhat Hard
14	Somewhat Hard +
15	Hard
16	Hard +
17	Very Hard
18	Very Hard +
19	Very, Very Hard
20	Maximal

MAINTENANCE & CARE

Post-Workout Machine Care

1. Store your machine in a dry and clean area when not in use.
2. Use a slightly damp cloth to clean areas where sweat or oil made contact with the machine.
3. Use a microfiber cloth to clean the display and remove unwanted oils and other things that may damage the screen.
4. Do not use bleach, acid, or other abrasive cleaners.

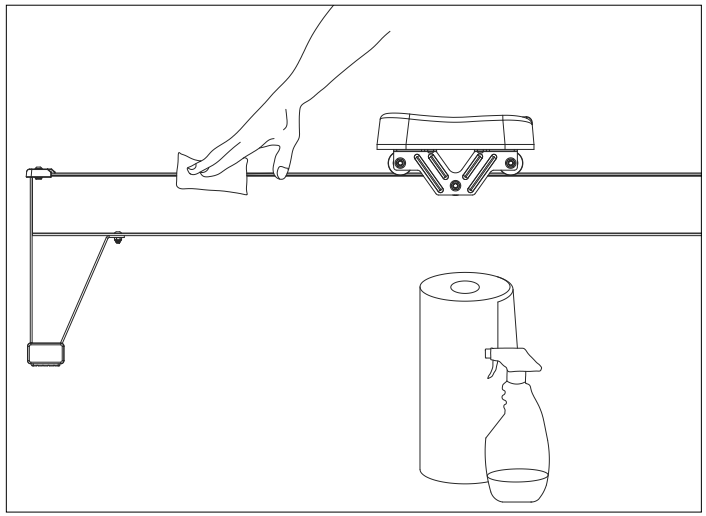

Sanitizing Your XTERRA Fitness Equipment

- Unupholstered high-contact surfaces (hard plastics) can be sanitized using a 75% isopropyl alcohol solution and a clean, dry cloth. Spray surfaces to be sanitized, and use the dry cloth to wipe clean. Allow surfaces to dry before using.
- For upholstered or soft-plastic surfaces, use a conditioner after sanitizing. Be sure to follow the instructions provided by the conditioner manufacturer to ensure proper use of the conditioner.
- Alternatively, you can make your own spray by mixing the proper ratio of isopropyl alcohol and distilled water to reach a 75% solution.

MAINTENANCE & CARE - CONTINUED

Clean the flywheel

Dust and lint may collect inside the flywheel and on the stainless-steel mesh. This will restrict airflow and lower the resistance of the fan. The flywheel and mesh can be cleaned by illustrations below.

1.

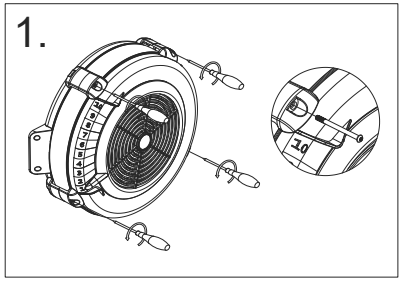

2.

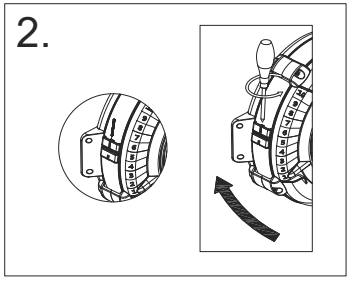

3.

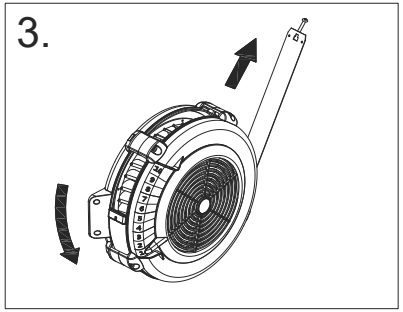

4.

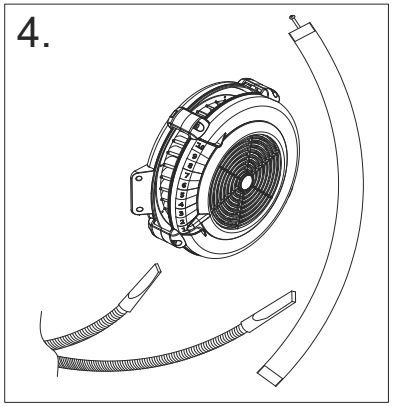

5.

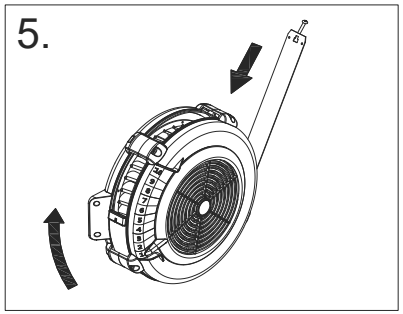

6.

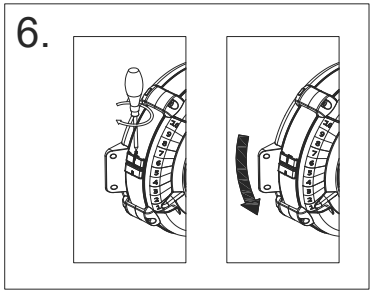

7.

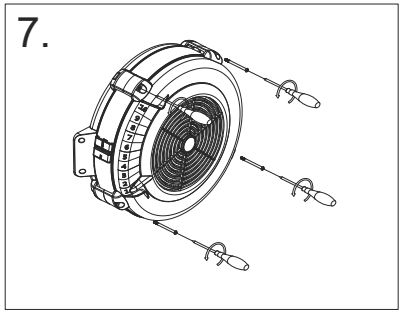

MAINTENANCE & CARE - CONTINUED

The safety and integrity designed into the ROWER can only be maintained when the ROWER is regularly examined for damage and wear. Special attention should be given to the following:

1. Pull on the **Handlebar (9)** and verify that the magnetic resistance system provides tension and the seat travel is smooth and stable.
2. Clean the roller tracks in the **Stainless Aluminum Rail (58)** with an absorbent cloth.
3. Verify that all nuts and bolts are present and properly tightened. Replace missing nuts and bolts. Tighten loose nuts and bolts.
4. Check the condition of the **Chain (10)**. Replace the **Chain (10)** if it is cracked or broken.
5. It is the sole responsibility of the user/owner to ensure that regular maintenance is performed.
6. Worn or damaged components must be replaced immediately or the ROWER removed from service until repair is made.
7. Only XTERRA Fitness supplied components should be used to maintain/repair the ROWER.
8. Keep your ROWER clean by wiping it off with an absorbent cloth after use.

MAINTENANCE & CARE - CONTINUED

Bungee Cord Adjustment

Over time, about 250,000 strokes on **Handlebar (9)**, your **Bungee Cord (11)** may stretch. Follow the following process to adjust:

1. Position the **Main Frame Assembly (1)** as shown in the illustration. Remove the **Main Frame Top Cap (16), Flat Head Hexagon Socket Screw (97)** from the **Main Frame (1)**.

2. Position the **Main Frame Assembly (1)** as shown in the below illustration. Unhook the **Left Bungee Cord Hook (44)** from the **Main Frame (1)**. Make a mark on the **Bungee Cord (11)** to move the hook forward 2 inches. Refer to View 1 to View 3 to untie the **Bungee Cord (11)** from the **Left Bungee Cord Hook (44)**, and move the hook forward 2 inches. Refer to View 4 to View 6 to re-tie the **Bungee Cord (11)** to the **Left Bungee Cord Hook (44)**. Hook the **Left Bungee Cord Hook (44)** back into the **Main Frame (1)** and push the hook to the left side to touch the inner wall of the **Main Frame (1)**.

NOTE: Always use two hands with a secure grip when re-attaching the **Left/Right Bungee Cord Hooks (44)**.

Unhook the **Right Bungee Cord Hook (44)** from the **Main Frame (1)**. Do the same as above to adjust the **Bungee Cord (11)** on the right side.

3. Position the **Main Frame Assembly (1)** as shown in the top illustration. Install the **Top Cap (16)** onto the **Main Frame (1)** and tighten it with **Flat Head Hexagon Socket Screw (97)**.

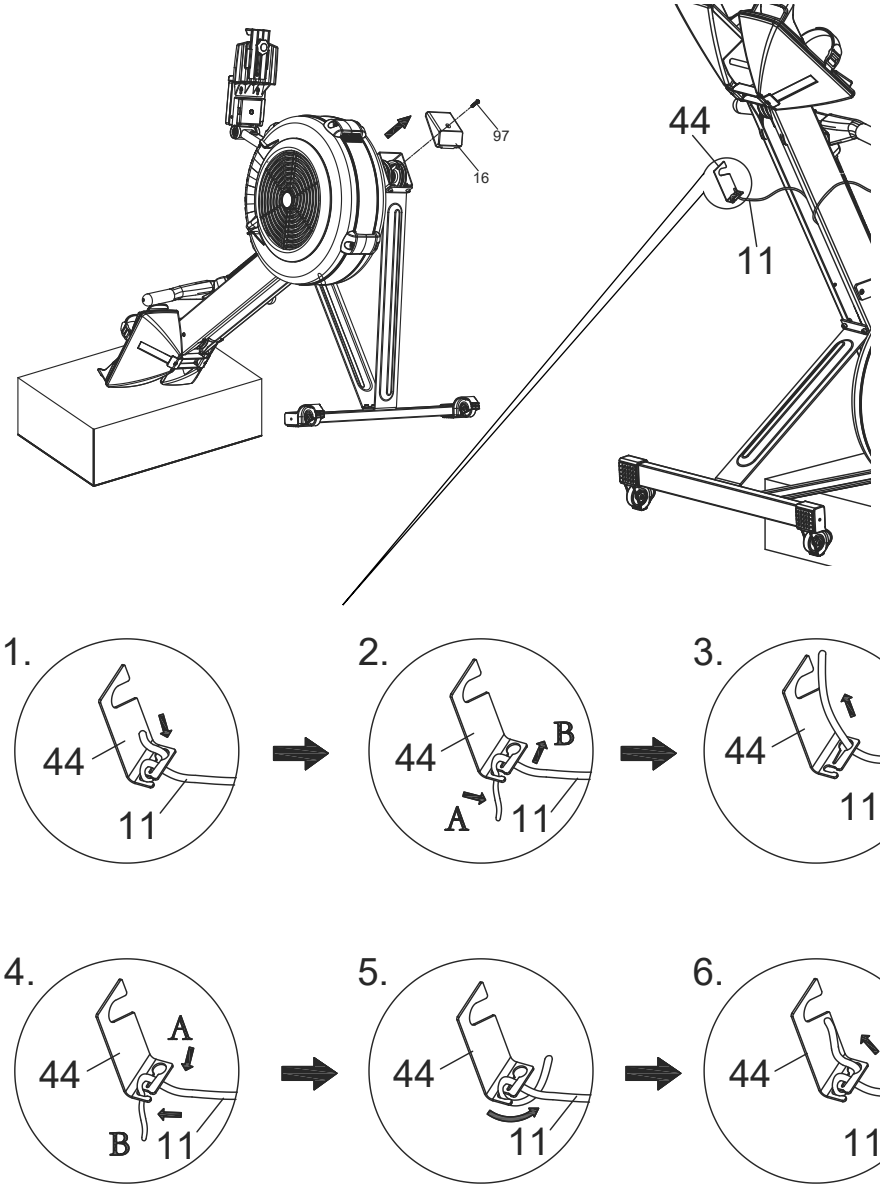

MAINTENANCE & CARE - CONTINUED

Chain Lubrication - Every 50 hours of use

Lubricate the chain with a teaspoon of purified mineral oil, 20W motor oil, or 3-in-1 oil. Apply the oil on a paper towel. Rub the paper towel along the full length of the chain. Wipe off excess. Repeat if not enough.

Note: Do not clean the chain with any kind of cleaner

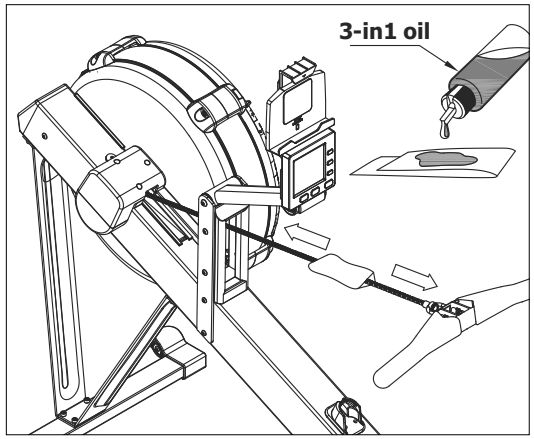

Chain Inspection - Every 250 hours of use

Inspect the chain for stiff links. If there is a stiff link use thorough lubrication to help. If does not help, replace chain.

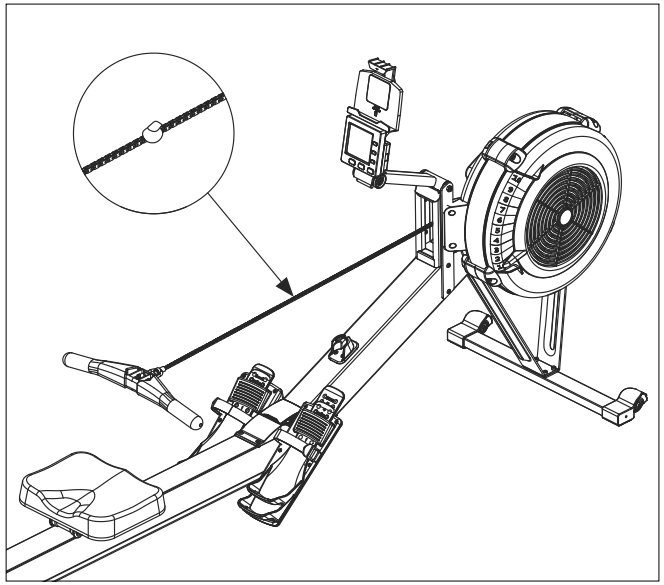

Handle Inspection - Every 250 hours of use

Inspect the nuts on the U-bolt that holds the chain and handle together. Check to see if it has become loose. If not, tighten the nuts.

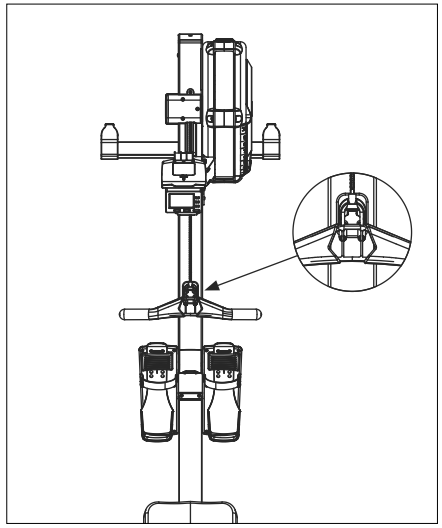

Inspect Fasteners

Check to see all screws including ones you assembled are all tight. If any are loose, tighten them.
Loosen or tighten the screws for the computer as necessary.

Inspect Bungee Cord

Adjust bungee cord If handle does not retract all the way to the fan or feel the bungee does not retract as fast as before, tighten the bungee cords. Please refer to previous page.

MAINTENANCE & CARE - CONTINUED

1. To store the ROWER, simply keep it in a clean dry place.
2. To avoid damage to the electronics, remove the batteries from the **Console Monitor (51)** before storing the ROWER for one year or more.
3. Move the ROWER with the **Transportation Wheel (66)** on the **Front Stabilizer (55)**. Lift the **Rear Stand of the Aluminum Rail (58)** to move the ROWER. Refer to the illustration below. Do not use the **Seat (59)** to move the ROWER. The **Seat (59)** will move and the **Seat Fixing Clip (78)** may pinch your hand or fingers.

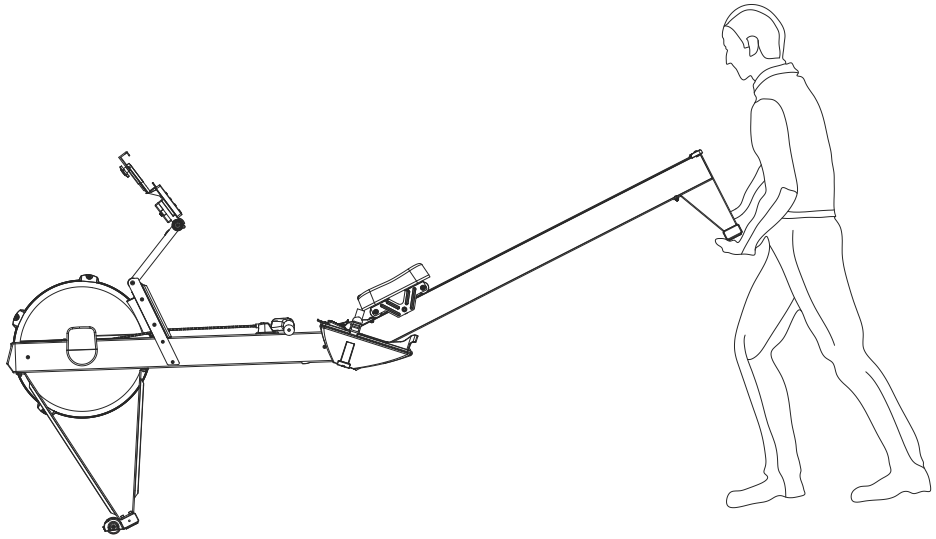

EXPLODED VIEW DIAGRAM

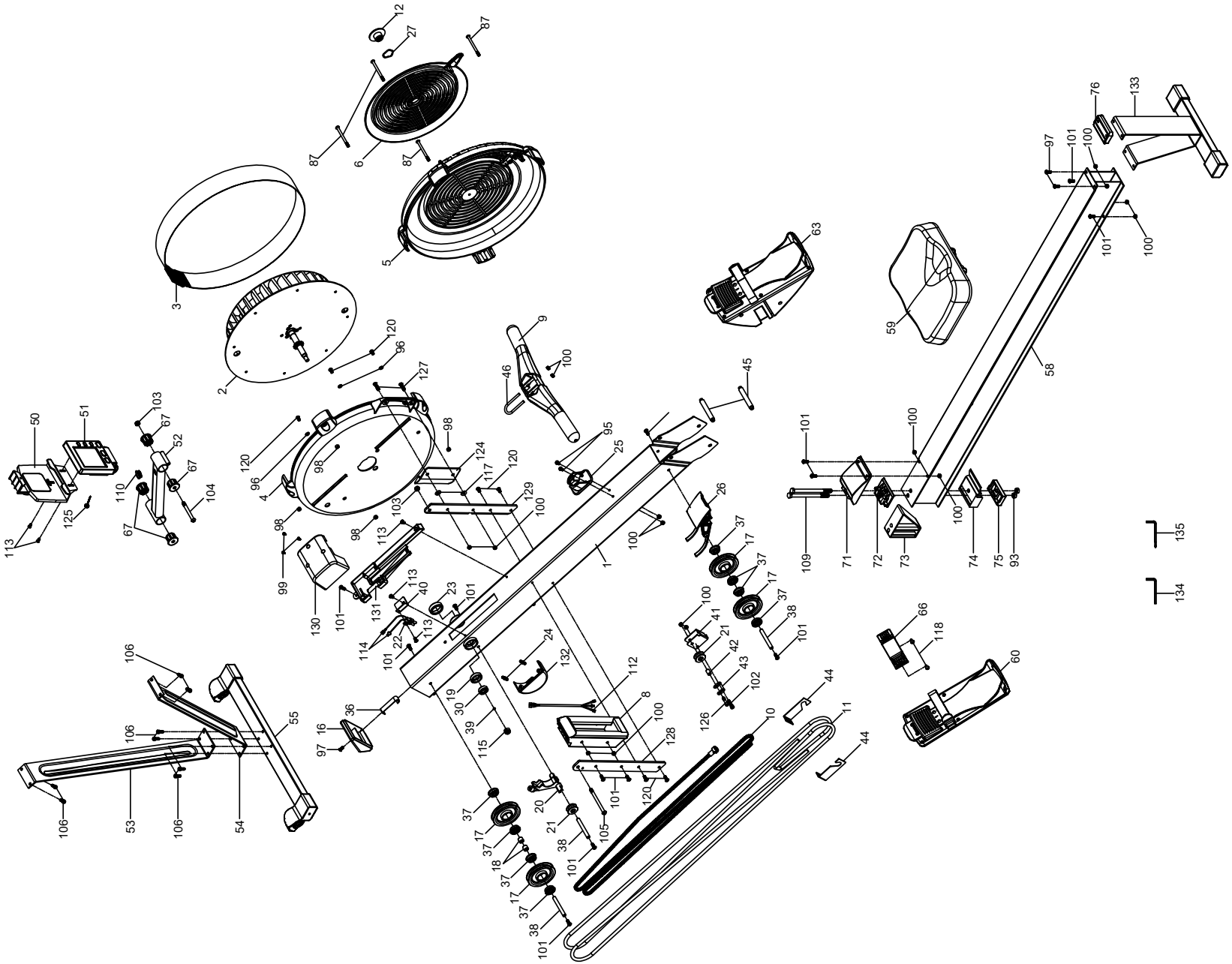

WARRANTY - RESIDENTIAL

Effective July 14, 2026 - **ERG780 Rower LIMITED WARRANTY**

XTERRA Fitness Inc. warrants all its home use Rower parts for a period of time listed below, from the date of retail sale, as determined by a sales receipt or in the absence of a sales receipt, eighteen (18) months from the original factory shipping date. XTERRA Fitness's responsibilities include providing new or remanufactured parts, at XTERRA Fitness's option, and technical support to our independent dealers and servicing organizations. In the absence of a dealer or service organization, these warranties will be administered by XTERRA Fitness directly to a consumer. The warranty period applies to the following components:

Home Use Limited Warranty

Warranty	Frame	Parts
Residential	5 Years	2 Years

RESPONSIBILITIES OF THE CONSUMER

This warranty applies only to products in ordinary household use, and the consumer/facility is responsible for the items listed below:

1. Proper use of the Rower in accordance with the instructions provided in this manual
2. Proper installation in accordance with instructions provided with the Rower and with all local electric codes.
3. Expenses for making the Rower accessible for servicing, including any item that was not part of the Rower at the time it was shipped from the factory.
4. Damages to the Rower finish during shipping, installation or following installation.
5. Routine maintenance of this unit as specified in this manual.

WARRANTY - CONTINUED

What is not covered?

EXCLUSIONS

This warranty does not cover the following:

1. CONSEQUENTIAL, COLLATERAL, OR INCIDENTAL DAMAGES SUCH AS PROPERTY DAMAGE AND INCIDENTAL EXPENSES RESULTING FROM ANY BREACH OF THIS WRITTEN OR ANY IMPLIED WARRANTY.
   Note: Some states do not allow the exclusion or limitation of incidental or consequential damages, so this limitation or exclusion may not apply to you.
2. Service call reimbursement to the consumer. Service call reimbursement to the dealer that does not involve malfunction or defects in workmanship or material, for units that are beyond the warranty period, for units that are beyond the service call reimbursement period, for Rower not requiring component replacement, or Rower not in ordinary household or light commercial use.
3. Damages caused by services performed by persons other than authorized XTERRA Fitness service companies; use of parts other than original XTERRA Fitness parts; or external causes such as corrosion, discoloration of paint or plastic, alterations, modifications, abuse, misuse, accident, improper maintenance, inadequate power supply, or acts of God.
4. Products with original serial numbers that have been removed or altered.
5. Products that have been: sold, transferred, bartered, or given to a third party.
6. XTERRA Fitness reserves the right to request proof of purchase if no warranty record exists for the product.
7. THIS WARRANTY IS EXPRESSLY IN LIEU OF ALL OTHER WARRANTIES EXPRESSED OR IMPLIED, INCLUDING THE WARRANTIES OF MERCHANTABILITY AND/OR FITNESS FOR A PARTICULAR PURPOSE.
8. Product use in any environment other than a residential setting or non-dues paying facility with 5 hours use or less per day.
9. Warranties outside of the United States may vary. Please contact your local dealer for details.

Product features or specifications as described or illustrated are subject to change without notice. All warranties are made by XTERRA Fitness, Inc. This warranty applies only in the 48 contiguous United States. NOTE: This does not include Alaska or Hawaii.

WARRANTY - CONTINUED

Responsibilities of the Owner

SERVICE

Keep your bill of sale. Twelve (12) months from the date on the bill of sale or eighteen (18) months from the date of factory shipping as determined by the serial number establishes the labor warranty period should service be required. If service is performed, it is in your best interest to obtain and keep all receipts. This written warranty gives you specific legal rights. You may also have other rights that vary from state to state. Service under this warranty must be obtained by following these steps, in order:

1. Contact your selling authorized XTERRA Fitness dealer. OR
2. Contact your local authorized XTERRA Fitness service organization.
3. If there is a question as to where to obtain service, contact our service department at (870) 935-1107.
4. XTERRA Fitness' obligation under this warranty is limited to repairing or replacing, at XTERRA Fitness' option, the product through one of our authorized service centers. All repairs must be preauthorized by XTERRA Fitness. If the product is shipped to a service center freight charges to and from the service center will be the customer's responsibility. For replacement parts shipped while the product is under warranty, the customer will be responsible for shipping and handling charges. For in-home service, the customer will be responsible for a trip charge. There will be an additional trip charge if the customer is located over 100 miles from the nearest service center.
5. The owner is responsible for adequate packaging upon return to XTERRA Fitness. XTERRA Fitness is not responsible for damages in shipping. Make all freight damage claims with the appropriate freight carrier. DO NOT SHIP ANY UNIT TO OUR FACTORY WITHOUT A RETURN AUTHORIZATION NUMBER. All units arriving without a return authorization number will be refused.

For any further information, or to contact our service department by mail, send your correspondence to:

XTERRA Fitness, Inc.

P.O. Box 2037

Jonesboro, AR 72402-2037

Product features or specifications as described or illustrated are subject to change without notice. All warranties are made by XTERRA Fitness, Inc. This warranty applies only in the 48 contiguous United States. NOTE: This does not apply to Alaska or Hawaii.

3000 Nestle Road Jonesboro, AR 72401 | Phone: 800-258-8511 | Fax: 870-935-7611

©2026 All Rights Reserved. ERG780 Owner's Manual