XTERRA FITNESS

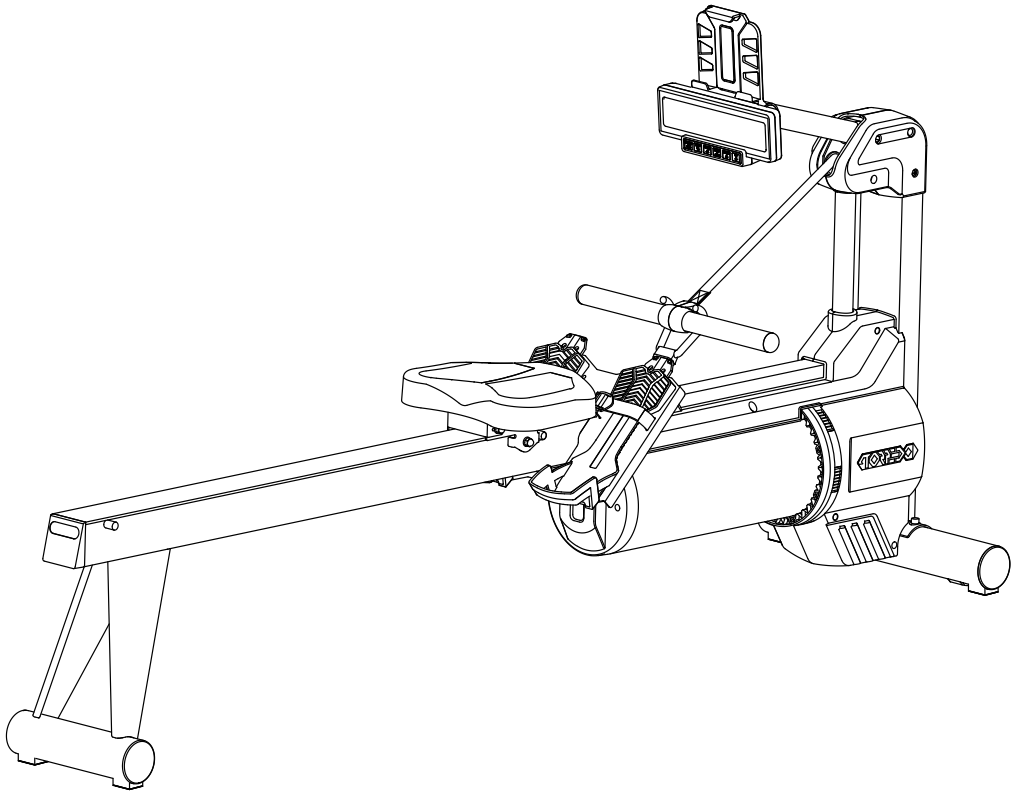

ERG800W TORPEDO ROWER

ERG800W_180913_OM_20231018

Online Support

If you require assistance or are experiencing issues with your XTERRA Machine, please contact customer care for additional help.

1-800-258-8511

questions@xterrafitness.com

Warranty Registration

Scan to quickly and easily register your new XTERRA Fitness machine.

Table of Contents

Product Registration 3
Warning / Safety Instructions
Product Label 4
Warning, Compliances, and Notices 5
Safety Instructions 6
Electrical Safety 8
Water Tank Instructions 9
Parts and Assembly
Parts of Your Rower 10
Parts Included 11
Assembly 12
How to Row 28
Storing Your Rower 29
Technology and Features
About Your Machine 31
Using the XTERRA+ App 32
App Connection 33
Console Screen - Overview 35
Function Buttons 36
Programs
Programs 40
Heart Rate Chest Strap 50
Heart Rate Chest Strap Warnings 51
Heart Rate Exertion 52
Maintenance & Care 54
Exploded View Diagram 55
Warranty 56

PRODUCT REGISTRATION

Congratulations on your new Water Rowing Machine, and welcome to the XTERRA Fitness family!

Thank you for your purchase of this quality unit from XTERRA Fitness. Your new unit was manufactured by one of the leading fitness manufacturers in the world and is backed by one of the most comprehensive warranties available. XTERRA Fitness will do all we can to make your ownership experience as pleasant as possible for many years to come.

If you have questions, or if parts are missing or damaged, or you require customer service, call (870) 336-4286. Please have your model number and serial number handy when you call.

Please take a moment at this time to record the name of the dealer, their telephone number, and the date of purchase below to make any future, needed contact easy. We appreciate your support and we will always remember that you are the reason that we are in business.

Serial Number	
Date of Purchase	
Dealer / Place of Purchase	

WARRANTY REGISTRATION

Use your smartphone to scan the QR code above to quickly and easily register your new XTERRA Fitness machine.

You can also go to **xterrafitness.com/warranty** under the Support tab to register online.

Version: 2.0
Revision: 10/18/23

PRODUCT LABELS





SERIAL NUMBER STICKER

This sticker will be found on the frame behind the water tank. Please record the number below the barcode for the purpose of registering your rower's warranty.



PROPOSITION 65 WARNING

This sticker will be found on the rear stabilizer. The State of California requires us to inform you that this unit was manufactured using chemicals that could cause harm with improper use.

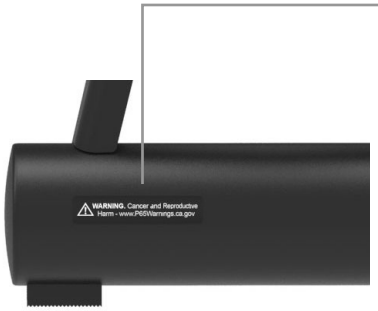

SAFETY WARNING STICKER

This sticker will be found on the frame behind the water tank. The same warning can be found in this manual. Please read and be aware of the precautions before operating your unit.

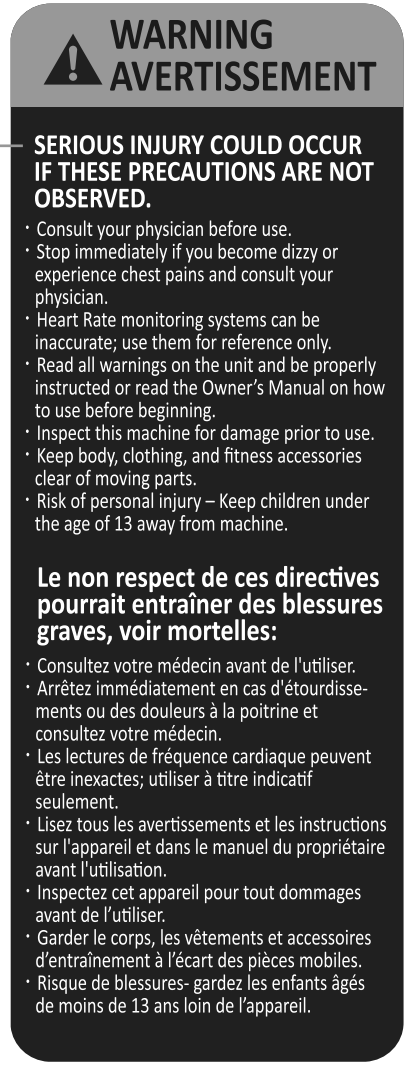

WARNINGS, COMPLIANCE AND NOTICES

This product has been certified to meet the following standards:

- FCC part 15
- UL
- Bluetooth (with FTMS)

This device complies with part 15 of the FCC Rules. Operation is subject to the following two conditions: (1) this device must not cause harmful interference, and (2) this device must not accept any interference received, including interference that may cause undesired operation.

NOTE: This equipment has been tested and found to comply with the limits for a Class B digital device, pursuant to Part 15 of the FCC Rules. These limits are designed to provide reasonable protection against harmful interference in a residential installation. This equipment generates, uses and can radiate radio frequency energy and, if not installed and used in accordance with the instructions, may cause harmful interference to radio communications. However, there is no guarantee that interference will not occur in a particular installation. If this equipment does cause harmful interference to radio or television reception, which can be determined by turning the equipment off and on, the user is encouraged to try to correct the interference by one or more of the following measures:

1. Reorient or relocate the receiving antenna.
2. Increase the separation between the equipment and receiver.
3. Connect the equipment to an outlet on a circuit different from that to which the receiver is connected.
4. Consult the dealer or an experienced radio/TV technician for help.

CAUTION:

- To comply with FCC RF exposure compliance requirements, a separation distance of at least 20 cm must be maintained between the antenna of this device and all persons.
- This transmitter must not be co-located or operating in conjunction with any other antenna or transmitter

SAFETY INSTRUCTIONS

When using an electrical appliance, basic precautions should always be followed, including the following:
Read all instructions before using this appliance.

DANGER - To reduce the risk of electric shock:
Always unplug this appliance from the electrical outlet immediately after using and before cleaning.

WARNING - To reduce the risk of burns, fire electric shock, or injury to persons:

1. An appliance should never be left unattended when plugged in. Unplug from outlet when not in use, and before putting on or taking off parts.
2. Do not operate under blanket or pillow. Excessive heating can occur and cause fire, electric shock, or injury to persons.
3. This exercise equipment is not intended for use by persons with reduced physical, sensory or mental capabilities, or lack of experience and knowledge.
4. Use this appliance only for its intended use as described in this manual. Do not use attachments not recommended by the manufacturer.
5. Never operate this appliance if it has a damaged cord or plug, if it is not working properly, if it has been dropped or damaged, or dropped into water. Return the appliance to a service center for examination and repair.
6. Do not carry this appliance by supply cord or use cord as a handle.
7. Keep the cord away from heated surfaces.
8. Never operate the appliance with the air openings blocked. Keep the air openings free of lint, hair, and the like.
9. Never drop or insert any object into any opening.
10. Do not use outdoors.
11. Do not operate where aerosol (spray) products are being use or where oxygen is being administered.
12. Connect this appliance to a properly grounded outlet only. See Grounding Instructions.
13. The appliance is intended for household use.
14. To disconnect, turn all controls to the off position, then remove the plug from the outlet.
15. Do not operate equipment on deeply padded, plush or shag carpet. Damage to both carpet and equipment may result.
16. Before beginning this or any exercise program, consult a physician. This is especially important for persons over the age of 35 or persons with pre-existing health conditions.
17. Keep hands away from all moving parts.
18. The pulse sensors are not medical devices. Various factors, including the user's movement, may affect the accuracy of heart rate readings. The pulse sensors are intended only as exercise aids in determining heart rate trends in general.
19. Do not attempt to use your equipment for any purpose other than for the purpose it is intended.
20. Wear proper shoes. High heels, dress shoes, sandals or bare feet are not suitable for use on your equipment. Quality athletic shoes are recommended to avoid leg fatigue.
21. **User Weight Limit: 330 lbs.**

Please ensure that you review and adhere to the user weight restrictions and power requirements of your new machine. Failure to do so may result in serious injury or damage to your machine.

SAFETY INSTRUCTIONS

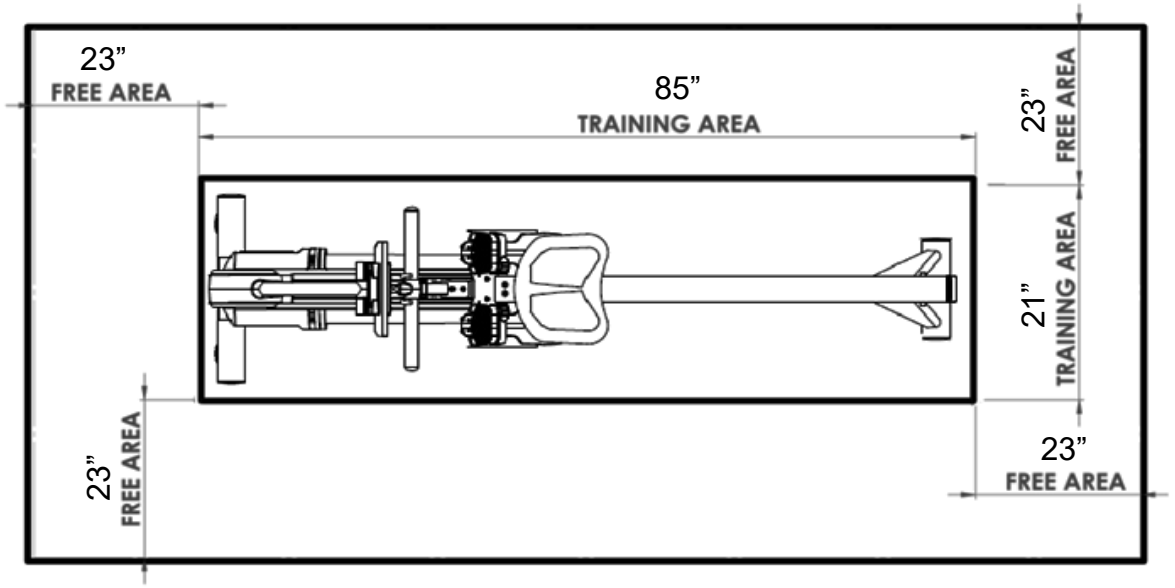

The free area shall be not less than 23 inches greater than the training area in the directions from which the equipment is accessed. The free area must also include the area for emergency dismount.
Where the rower is positioned adjacent to each other the free area may be shared.

ELECTRICAL SAFETY

WARNING!

Route the power cord away from any moving part of the unit including the elevation mechanism and transport wheels.

NEVER remove any cover without first disconnecting AC power. If voltage varies by ten percent (10%) or more, the performance of your unit may be affected. **Such conditions are not covered under your warranty.** If you suspect the voltage is low, contact your local power company or a licensed electrician for proper testing.

NEVER expose this unit to rain or moisture. This product is **NOT** designed for use outdoors, near a pool or spa, or in any other high humidity environment. The temperature specification is 40 degrees C, and humidity is 95%, non-condensing (no water drops forming on surfaces).

Circuit breakers: Avoid AFCI/GFCI circuit breakers if possible. These breakers may trip occasionally during exercise because of the high inrush currents of the unit drive electronics and motor. This is an issue that affects all unit brands. New laws in your area may require these breakers. If you do have these breakers and outlets in your home, and are experiencing nuisance tripping, you should check if there are any other devices plugged into the same circuit. Some examples of devices that may also cause tripping are fluorescent lights with electronic ballasts, coffee maker, space heater, hair drier.

Optimally the unit should be the only device plugged into the circuit. Our units have surge suppressors built in to help avoid nuisance tripping. We have tested several AFCI/GFCI breakers and outlets with our products. Brands we have tested are: Eaton (Cutler Hammer Series), Leviton (Smart lock pro) and Schneider Electric (Canadian home series). These breakers do not trip in our testing, when connected to our units, as long as no other devices are plugged into the same circuit.

- **NEVER** operate this unit without reading and completely understanding the results of any operational change you request from the computer.
- Understand that changes in resistance do not occur immediately. Set your desired work level on the computer console and release the adjustment key. The computer will obey the command gradually.
- **NEVER** use your unit during an electrical storm. Surges may occur in your household power supply that could damage unit components. Unplug the unit during an electrical storm as a precaution.
- Use caution while participating in other activities while walking on your unit; such as watching television, reading, etc. These distractions may cause you to lose balance which may result in serious injury.
- Do not use excessive pressure on console control keys. They are precision set to function properly with little finger pressure.

WATER TANK & STORAGE WARNING

1. Be careful not to hit the water tank during assembly and exercise.
2. Be careful not to let the water tank touch the floor. The tank might be damaged.
3. Do not insert fingers into the tank!
4. Keep unsupervised children away from the equipment.
5. Injuries to health may result from incorrect or excessive training.
6. Please use clean and filtered water to fill the water tank.
7. Where water quality is known to be poor, we recommend the use of distilled water.
8. Please change the water each half year to protect the product.

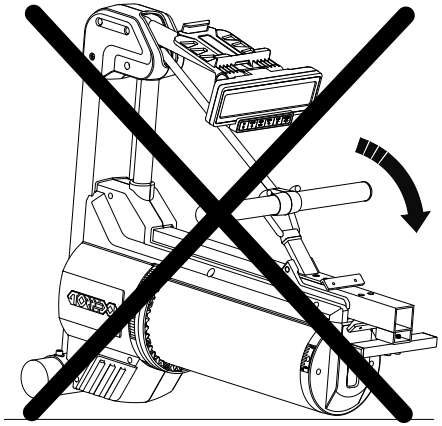

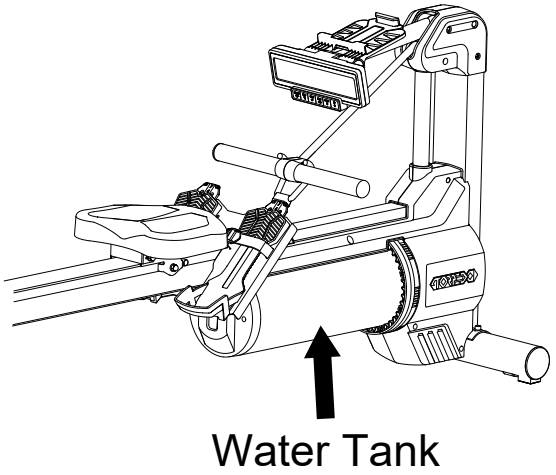

RECOMMENDED WATER LEVEL

Follow the water tank level label to fill the water between the Min and Max Level. This will protect the product, setup the standard load, and ensure that the data on the console displays correctly.

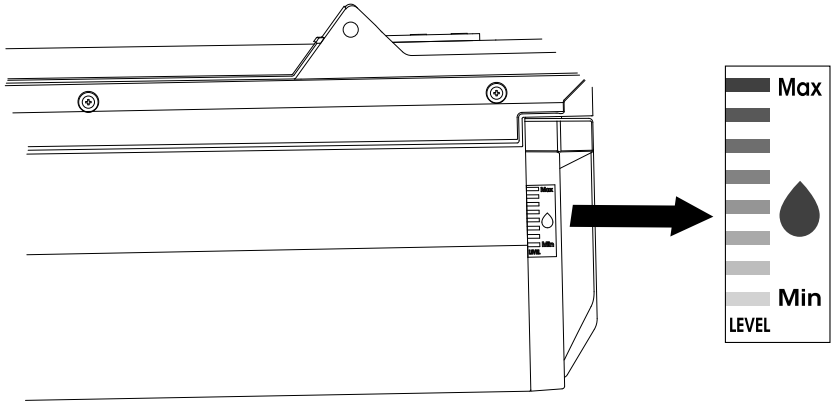

PARTS OF YOUR ROWER

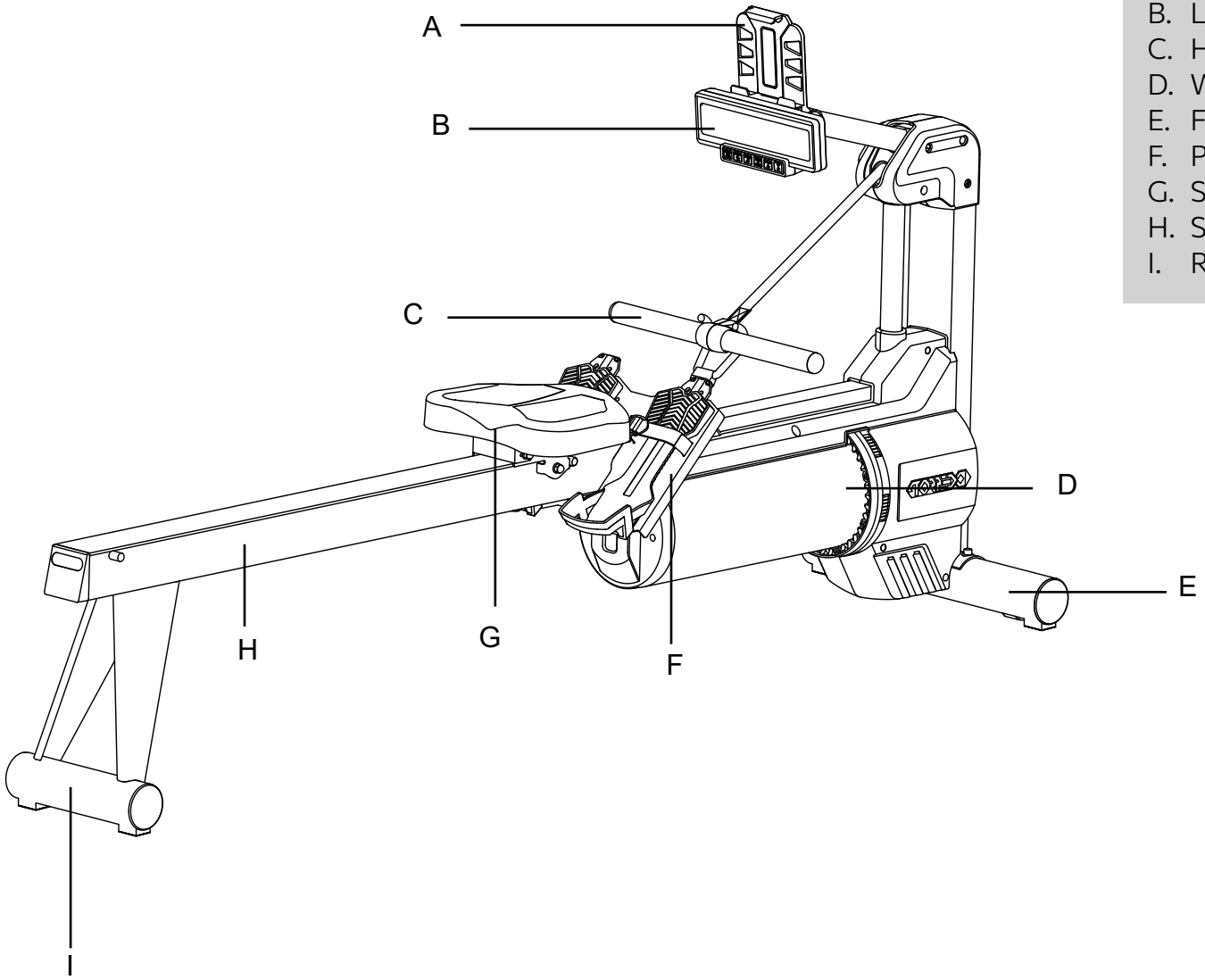

A. Tablet Rack
B. LCD Window
C. Handle
D. Water Tank
E. Front Stabilizer
F. Pedals
G. Seat
H. Slide Rail
I. Rear Stabilizer

PARTS INCLUDED

TOOLS INCLUDED:

- ❑ 6mm Allen Wrench
- ❑ 5mm Allen Wrench
- ❑ 13/15mm Wrench

PARTS INCLUDED:

- ❑ Main Frame
- ❑ Front Stabilizer
- ❑ Rear Stabilizer
- ❑ Aluminum Rail
- ❑ Saddle
- ❑ Water Pump
- ❑ Pedal
- ❑ Adaptor
- ❑ Hardware Bag
- ❑ Adapter

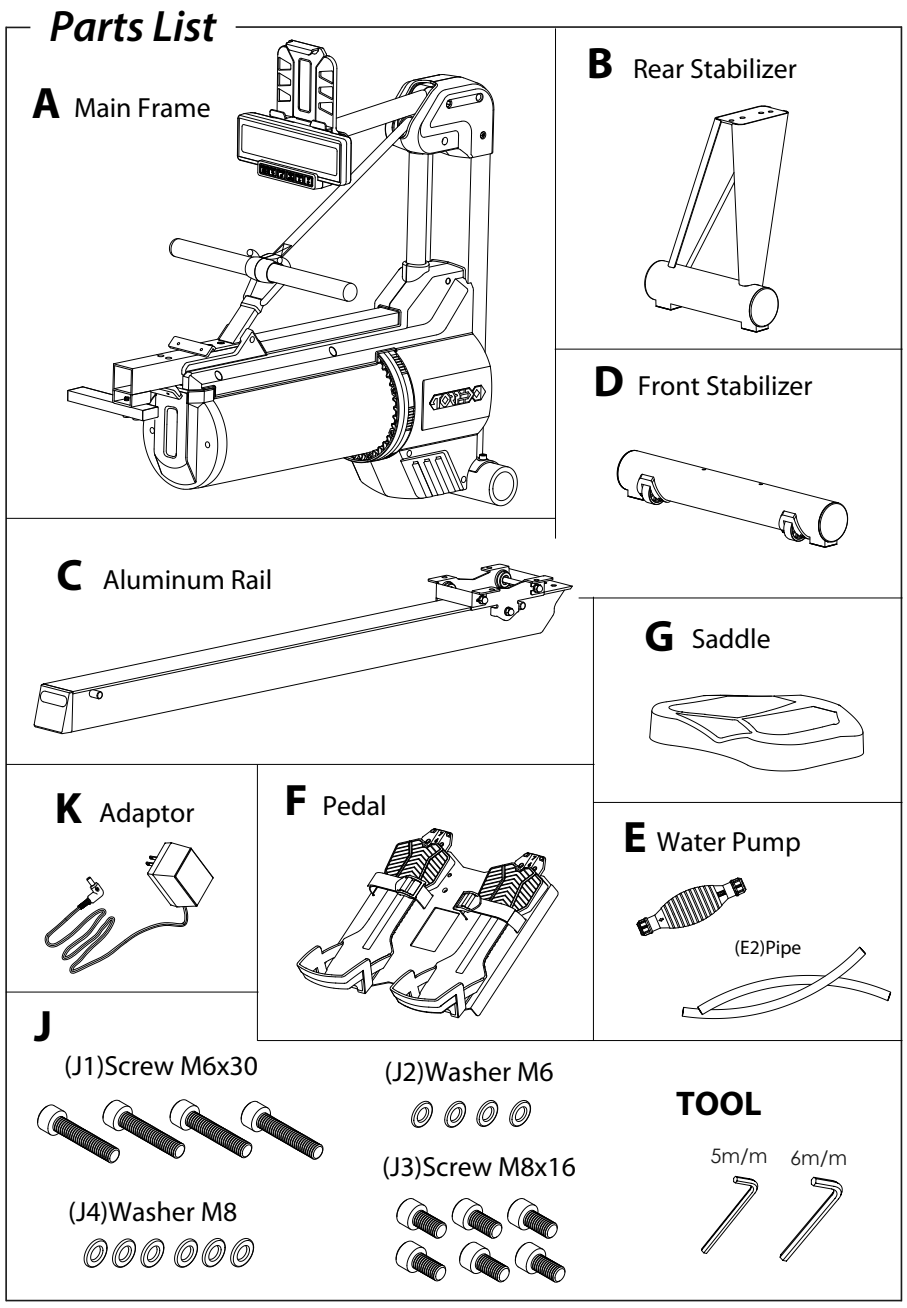

ASSEMBLY

FIGURE 1

How to Expand the Bottom Carton and Check the Parts?

Step 1. Expand the bottom carton like below fig1-1.
Step 2. Take the polyfoam shown in the graphic out.(fig1-2)
Collect the parts except the main frame (A) and confirm that they match the Part List.

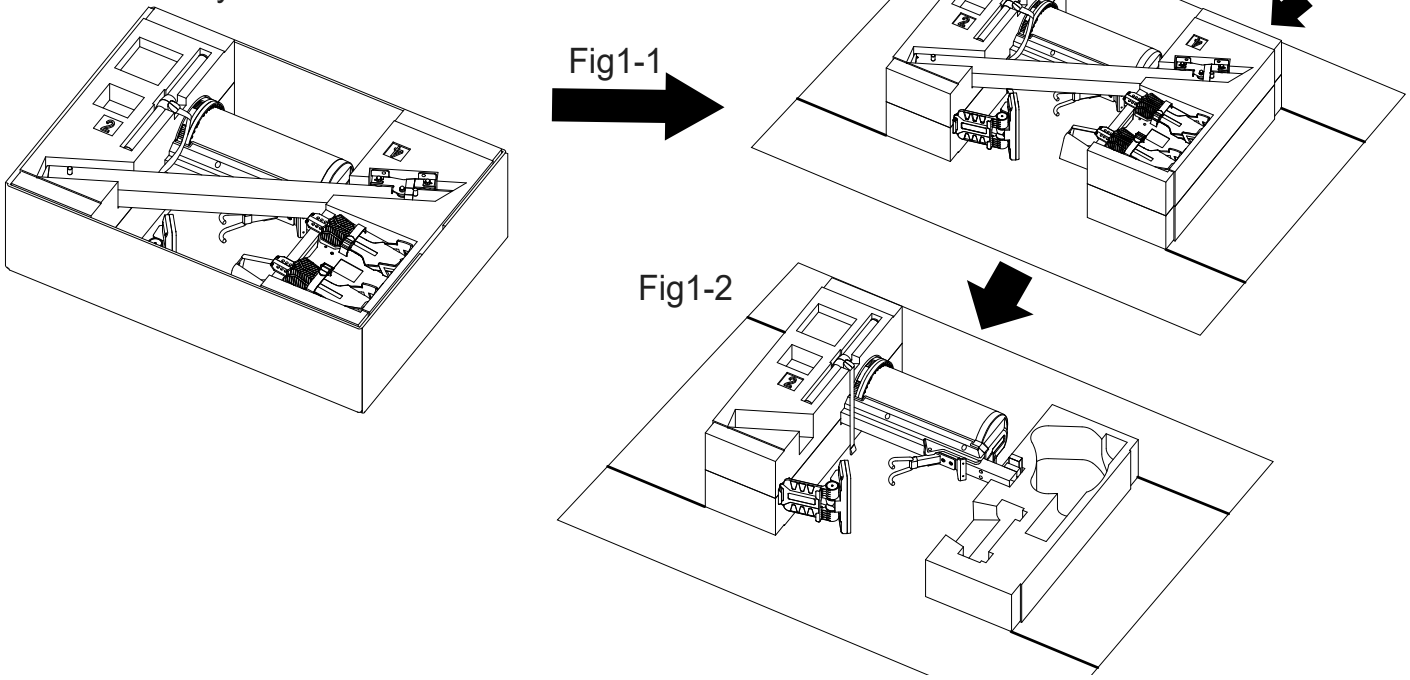

FIGURE 2

How to Disassemble the Tube for Packaging?

Step 1. Stand up the main frame (A) together with the polyfoam clamping it like below figure.

Step 2. Disassemble the two screws and the packaging tube. In the following assembly, you won't need these two screws and packaging tube.

WARNING! Don't take the water tank as a force point to stand up the main frame.

WARNING! Don't let the water tank touch the ground.

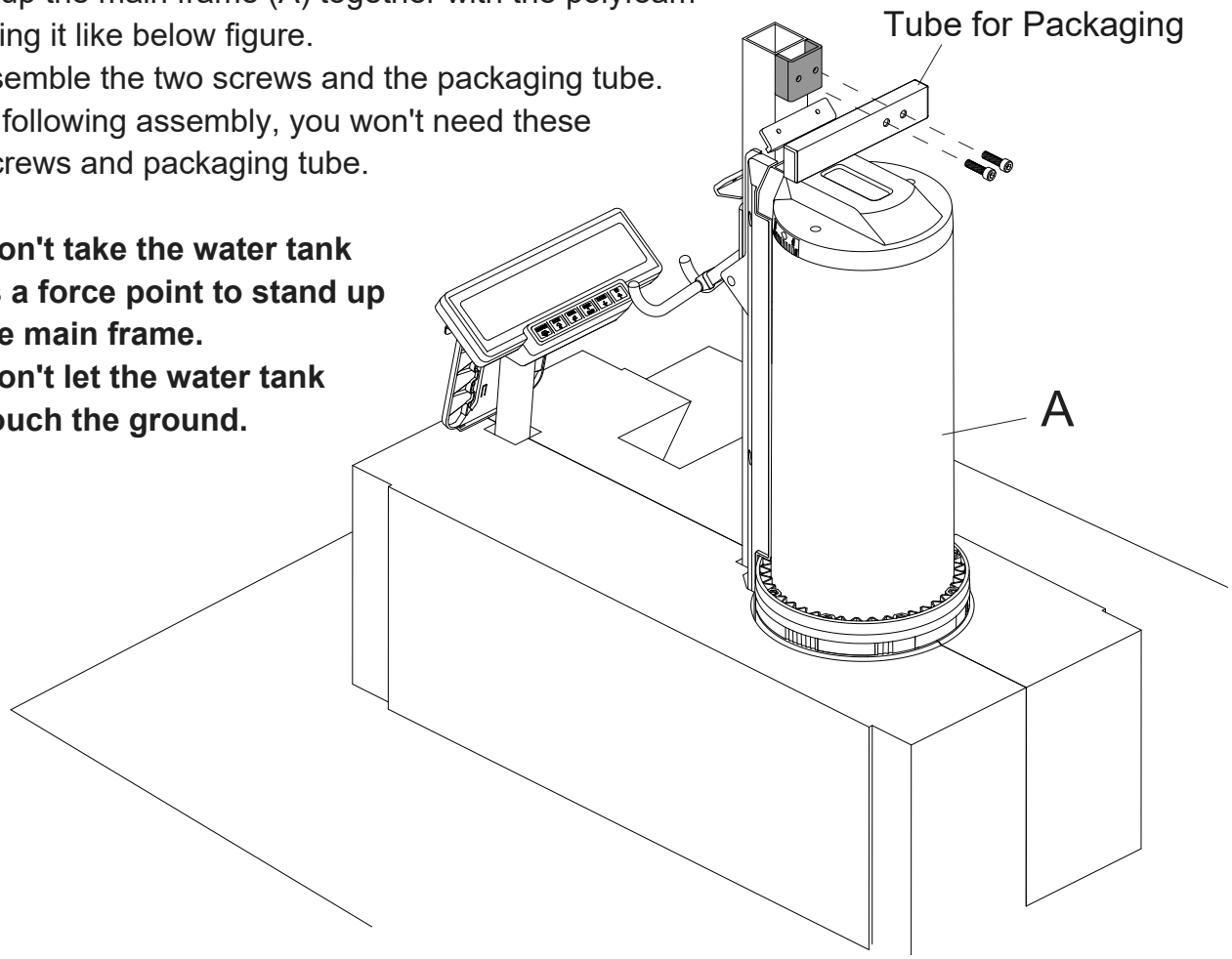

Use Tool :
6m/m



FIGURE 3

How to Assemble the Pedal?

Use the screw (J1), washer (J2) to fasten the pedal (F) on the main frame (A).

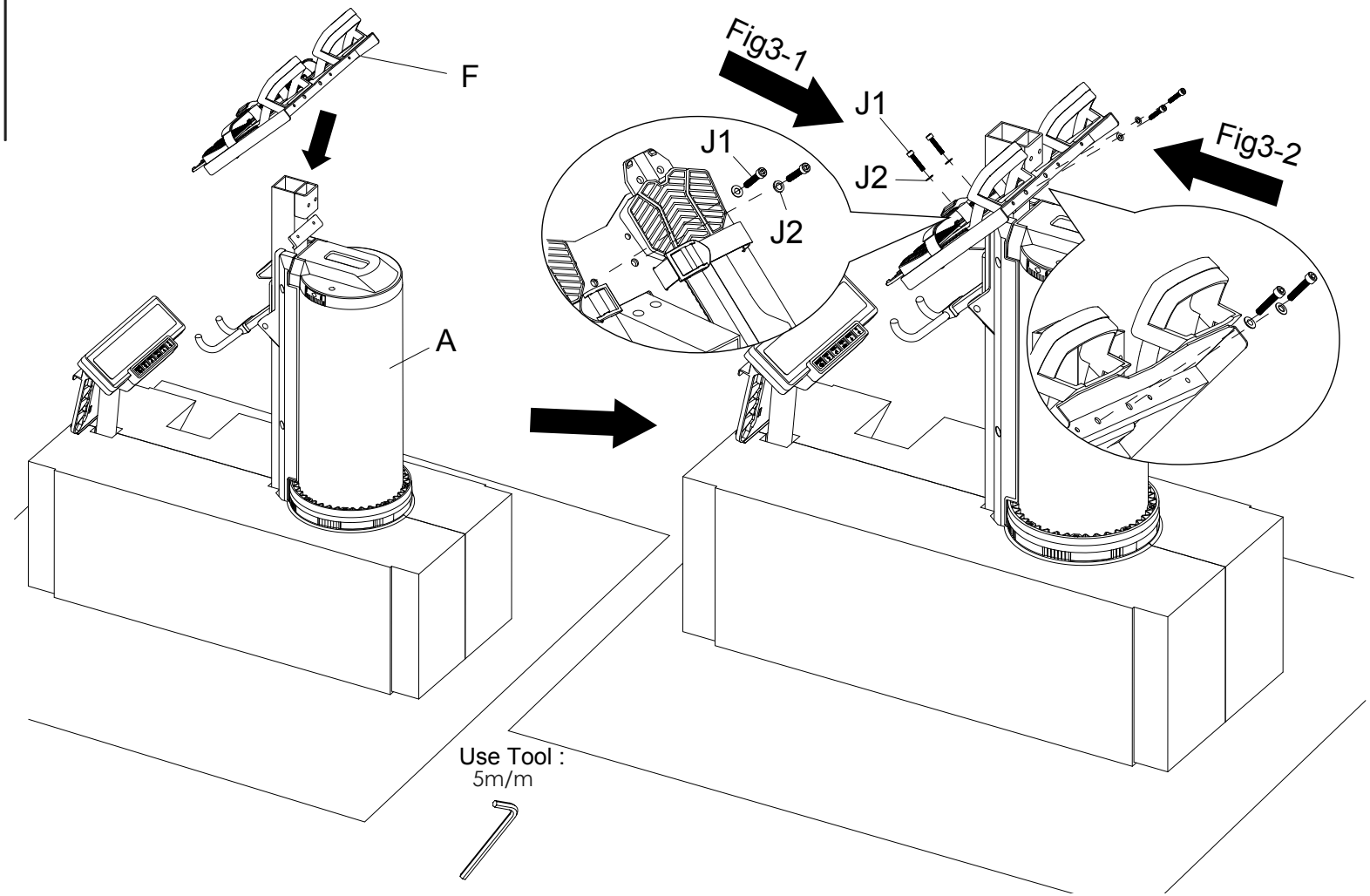

ASSEMBLY - CONTINUED

Main Frame after Assembled with Pedal.

Fig3-1

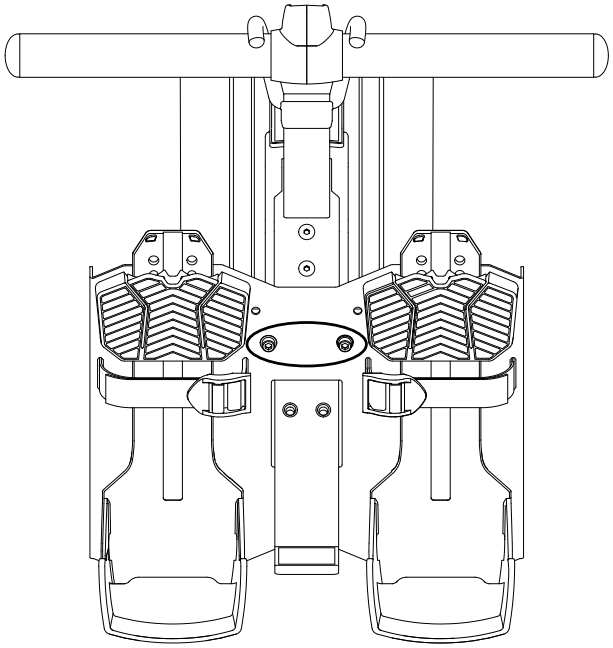

Fig3-2

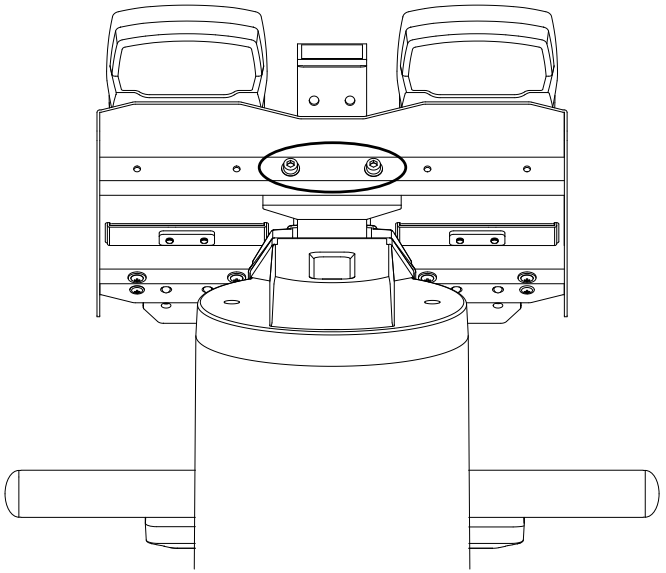

FIGURE 4

How to remove the polyfoam clamping the main frame and the paper tube?

Step 1. Stand up the main frame (A) together with the polyfoam clamping it. Put one polyfoam below the pedal like Fig 4-1. Then, remove the polyfoam clamping the main frame (A).

Step 2. Remove the strap holder and put the handle bar on the handle bar hanger like Fig 4-2.

Step 3. Disassemble the prescrewed screws (J3), washers (J5) and the paper tube like below Fig 4-3. Please keep the screws and washers for the next step.

Fig4-1

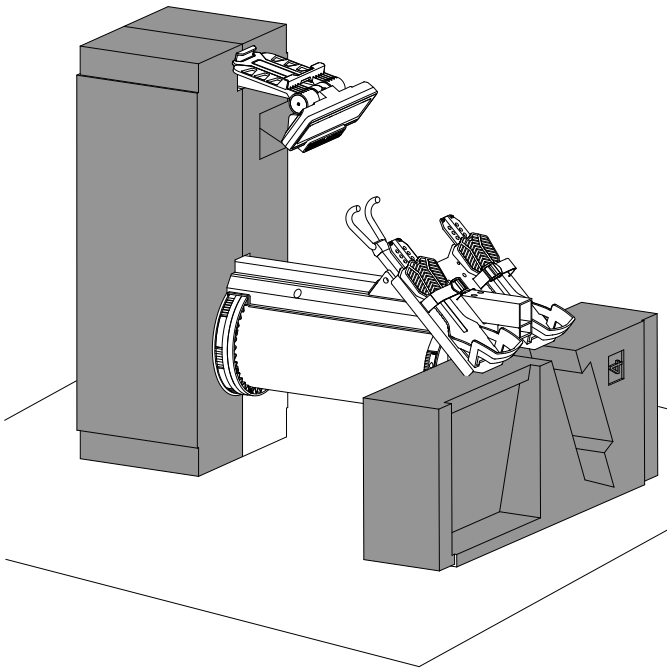

Fig4-2

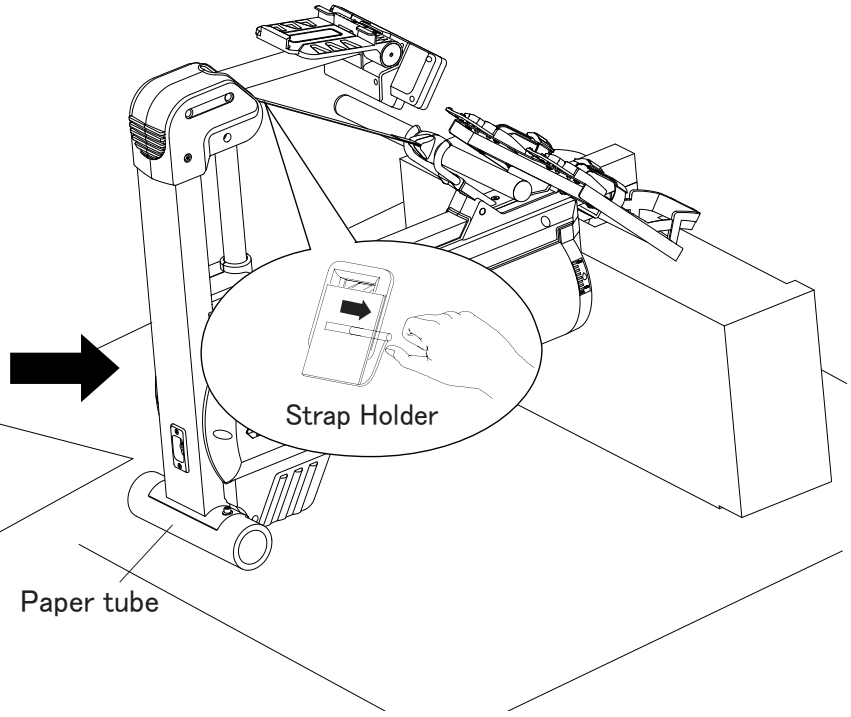

ASSEMBLY - CONTINUED

Fig4-3

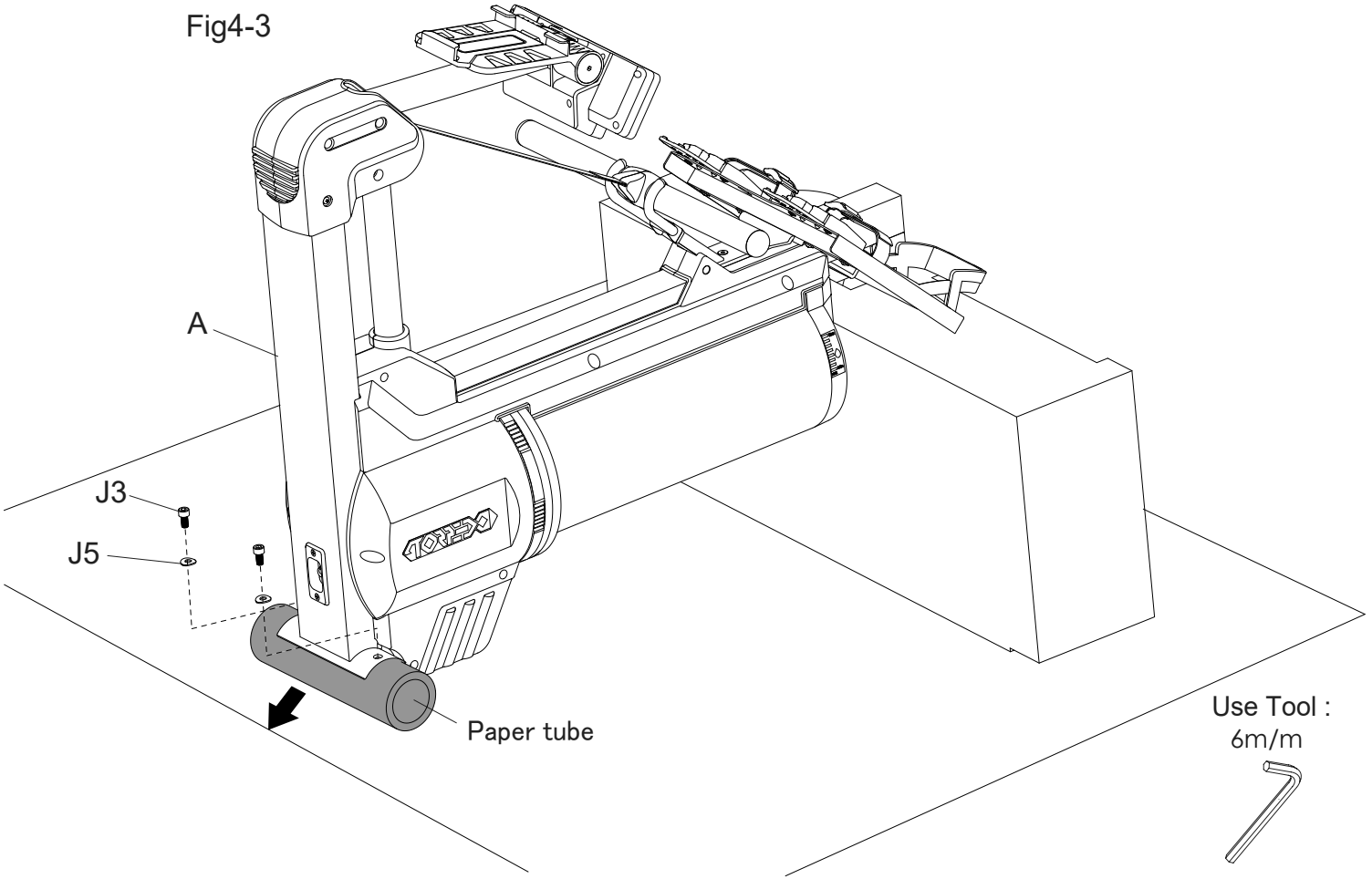

FIGURE 5

How to Assemble the Front Stabilizer?

Use the screw (J3) and washer (J5) in the previous step to assemble the front stabilizer (D) on the main frame (A). However, don't tighten the screws hard at this moment. Please tighten the screws hard after the aluminum rail (C) and the rear stabilizer (B) are assembled on the main frame (A). This is to make sure the foot pad on the front stabilizer touches the ground better.

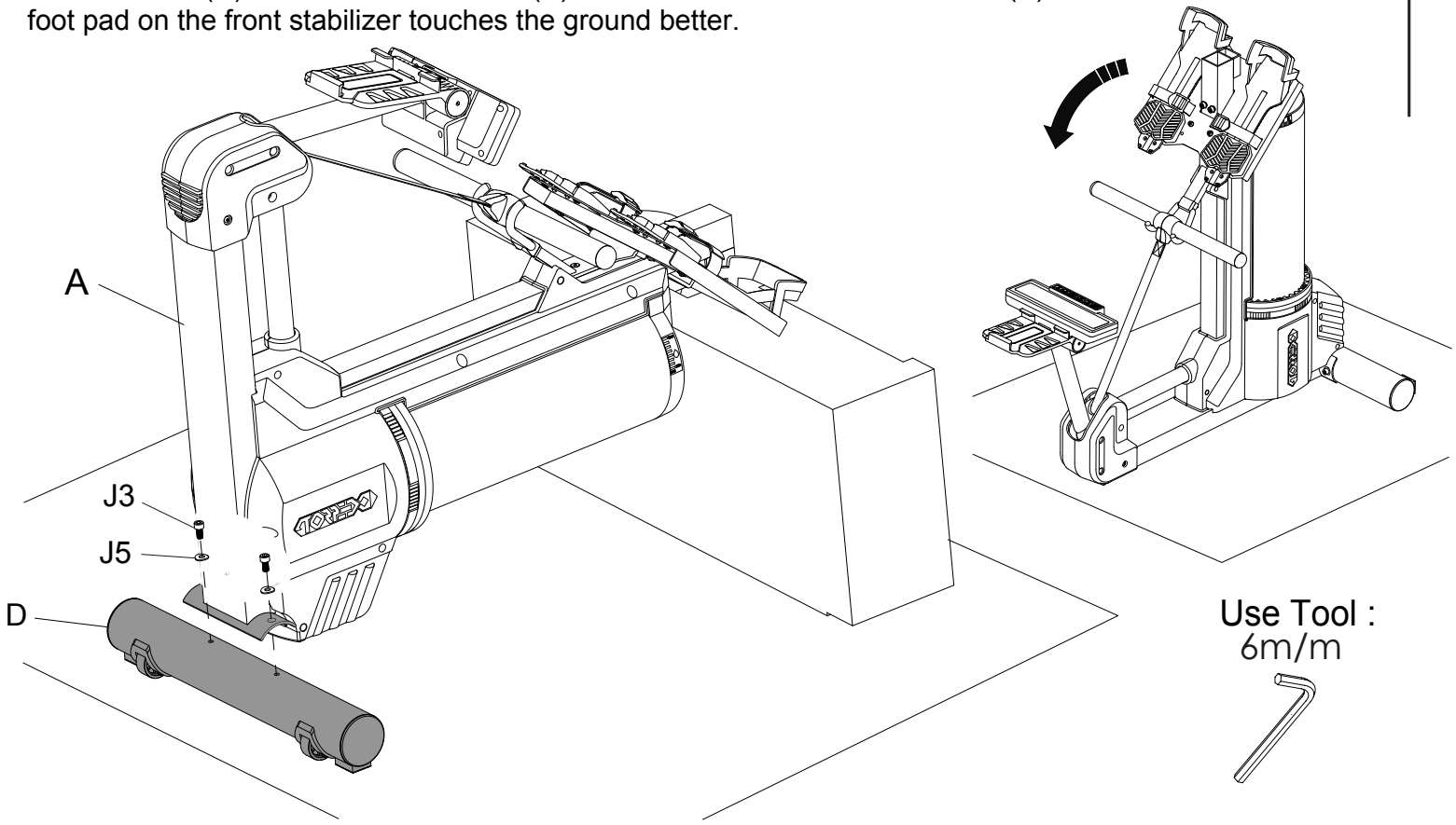

Use Tool :
6m/m

FIGURE 6

How to Assemble the Rear Stabilizer?

Use the screw (J3) and washer (J4) to fasten the rear stabilizer (B) on the Aluminum rail (C).

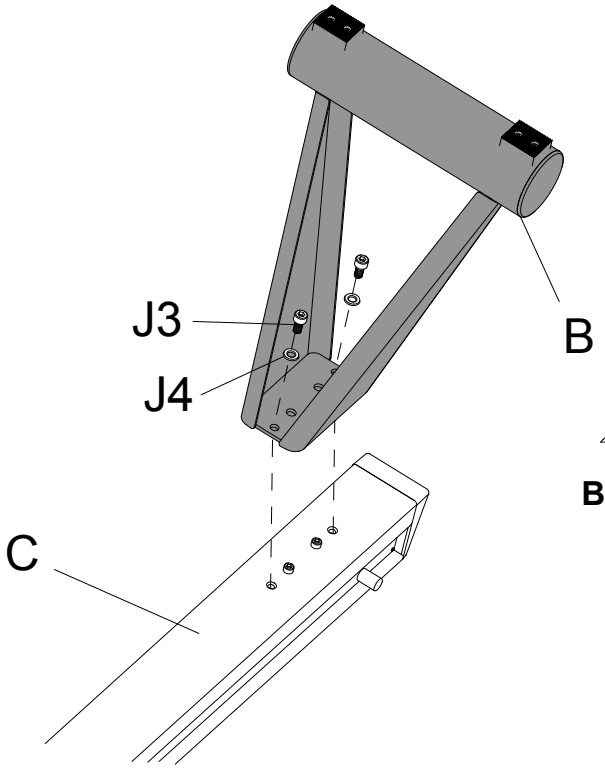



Be aware of the direction of the rear stabilizer.

Use Tool :
6m/m



FIGURE 7

How to Assemble the Aluminum Rail?

Cut the strap holding the sliding basement on the aluminum track off. Then, use the screw (J3) and washer (J4) to assemble the aluminum rail (C) on the main frame.

****Notice that the sliding basement will slide after the strap is cut off. Please be careful to not pinch yourself.****

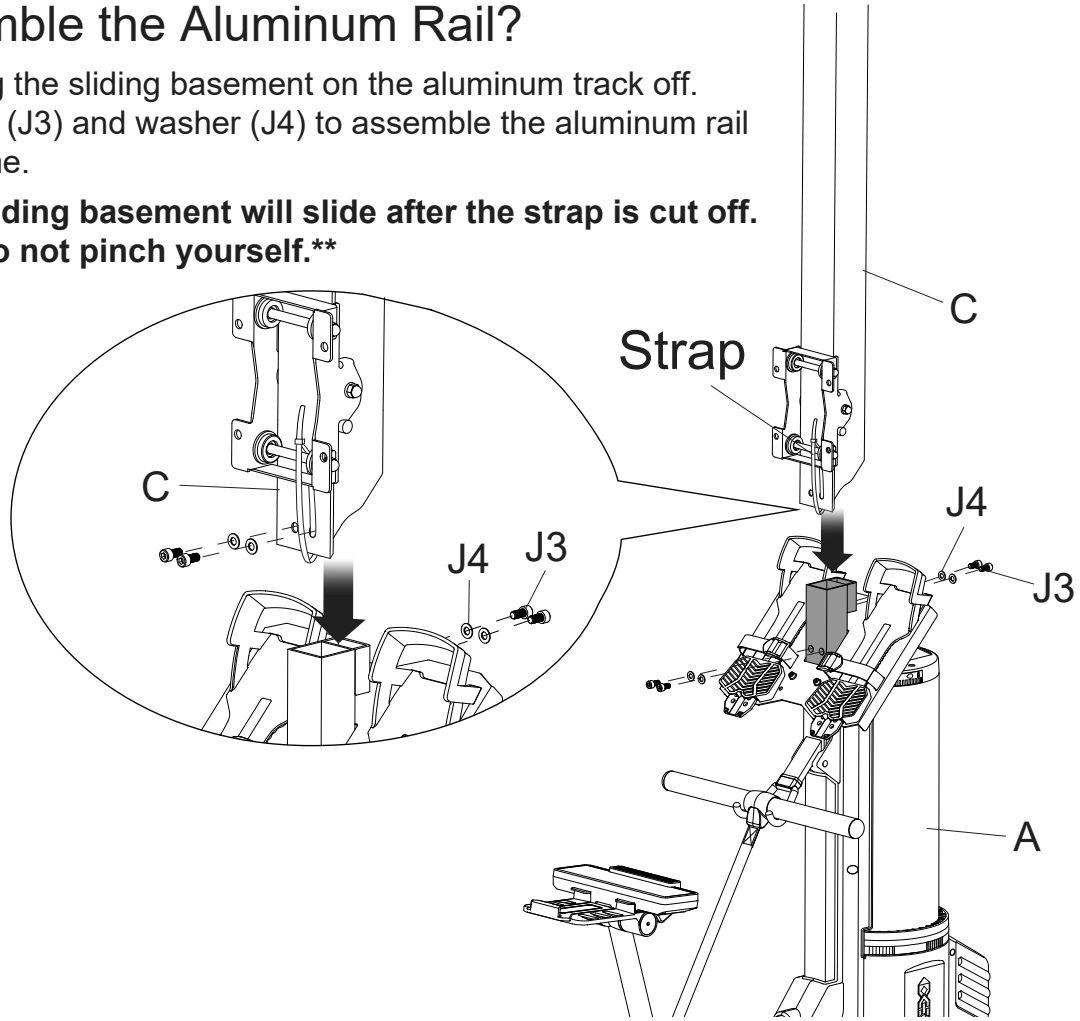

Use Tool :
6m/m



FIGURE 8

How to Assemble the Saddle?

Disassemble the prescrewed screws (J3) and washers (J4) from the saddle. Then, use these screws and washers to assemble the saddle (G) on the sliding basment on the aluminum rail (C).
After you assemble the saddle, you can lay down the rower.
** After you lay down the rower, please fasten the screws on the front stabilizer which you haven't fastened hard in the Step 5.**

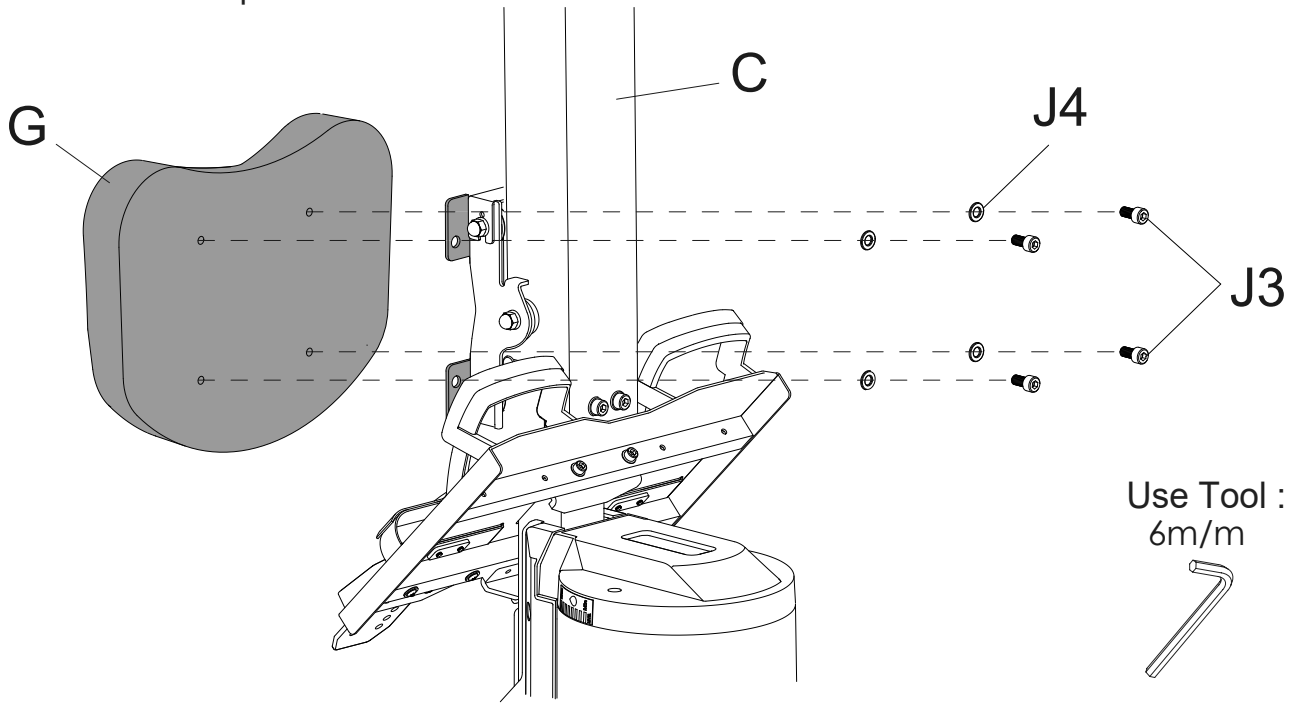

FIGURE 9

How to Adjust the Pedals

If you would like to adjust the pedal, pull up on the two buttons on the pedal at the same time. Move the pedal up or down to the desired position. Release the buttons to lock the pedal in position.
There are 7 positions you can choose. It is same to adjust the left pedal.
Tighten the pedal straps when you are in motion.

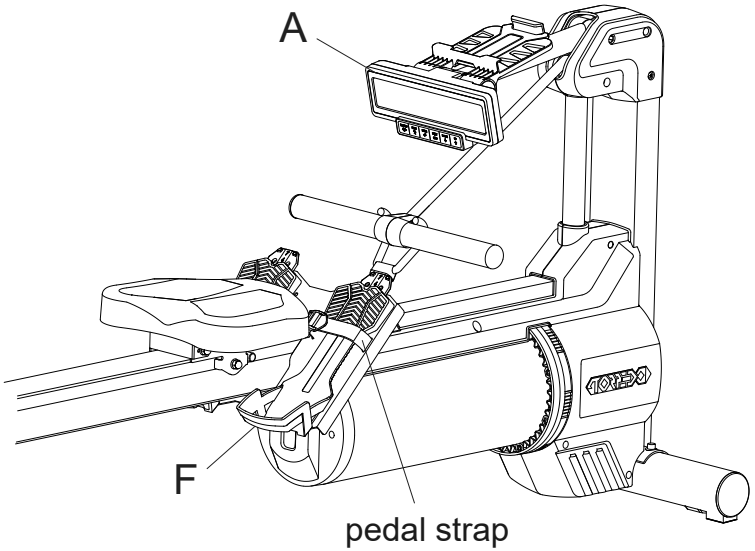

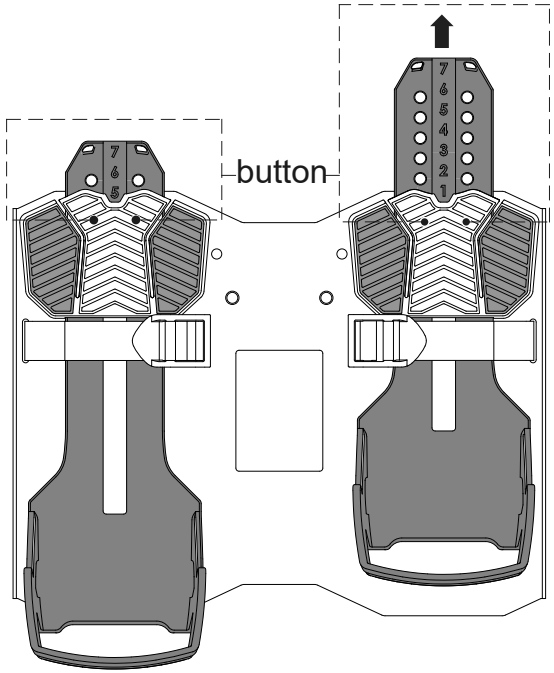

FIGURE 10

Adjust the Angles of Console, Console Tube & the Smart Phone Stand

The console angle is adjustable as shown.After proper position find, fixed position.

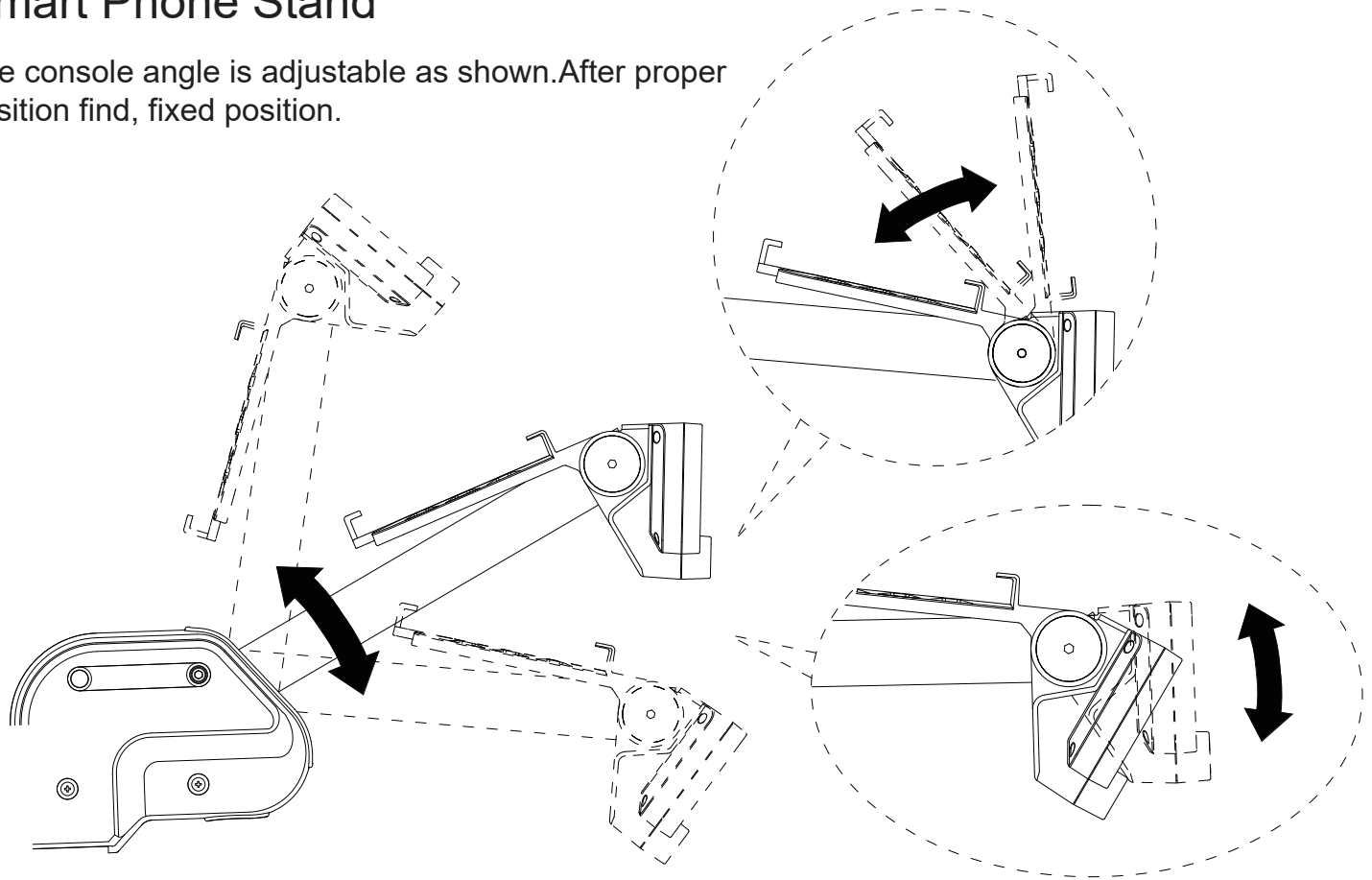

FIGURE 11

How to assemble the water drum pump?

1.First make sure the plastic retaining nut (E1) is installed on the water pump (E) and please lock the plastic nut counterclockwise to the bottommost position.

2.Connect the two water pipes (E2) with the water pump (E) and turn the two plastic nuts (E1) clockwise to lock the two water pipes (E2).

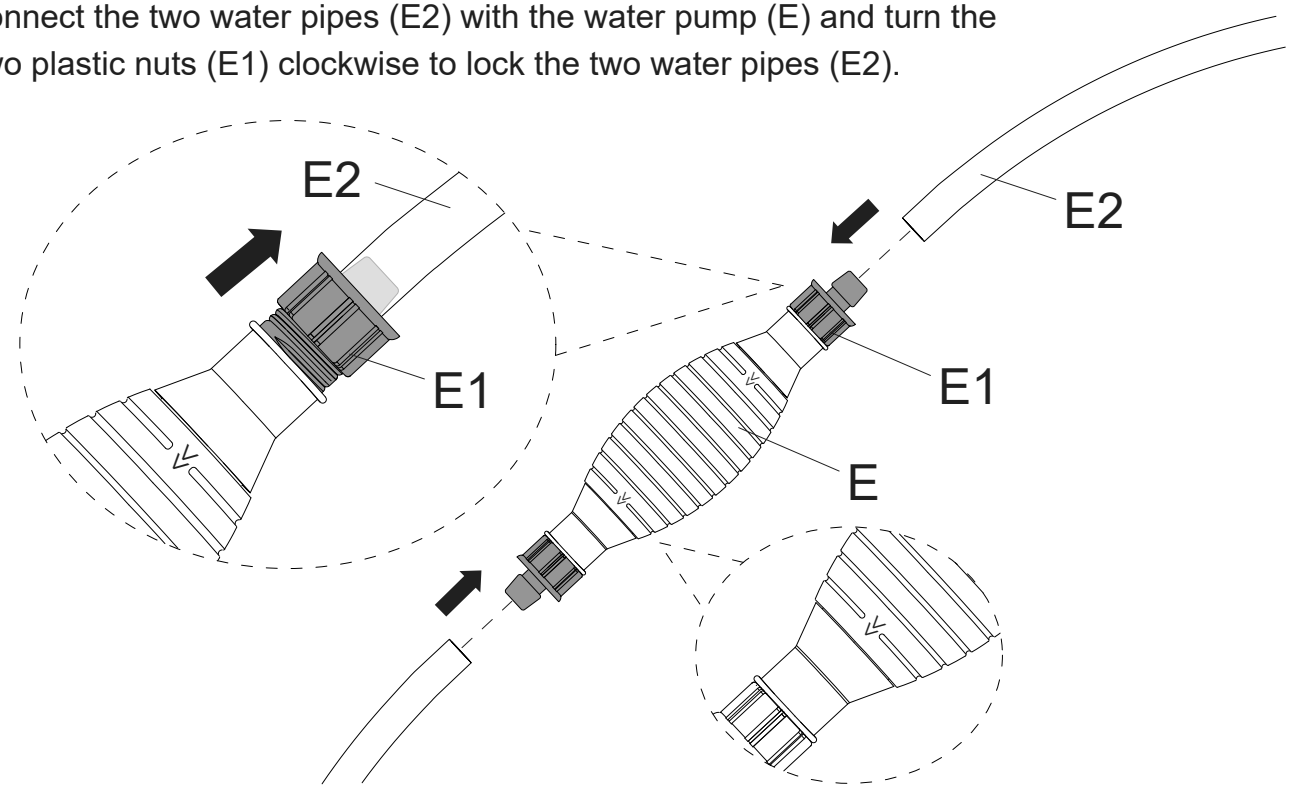

The arrow mark indicates the direction of the water flow.

FIGURE 12

How to Use the Adaptor

Plug the adaptor (K) like the below graphic.

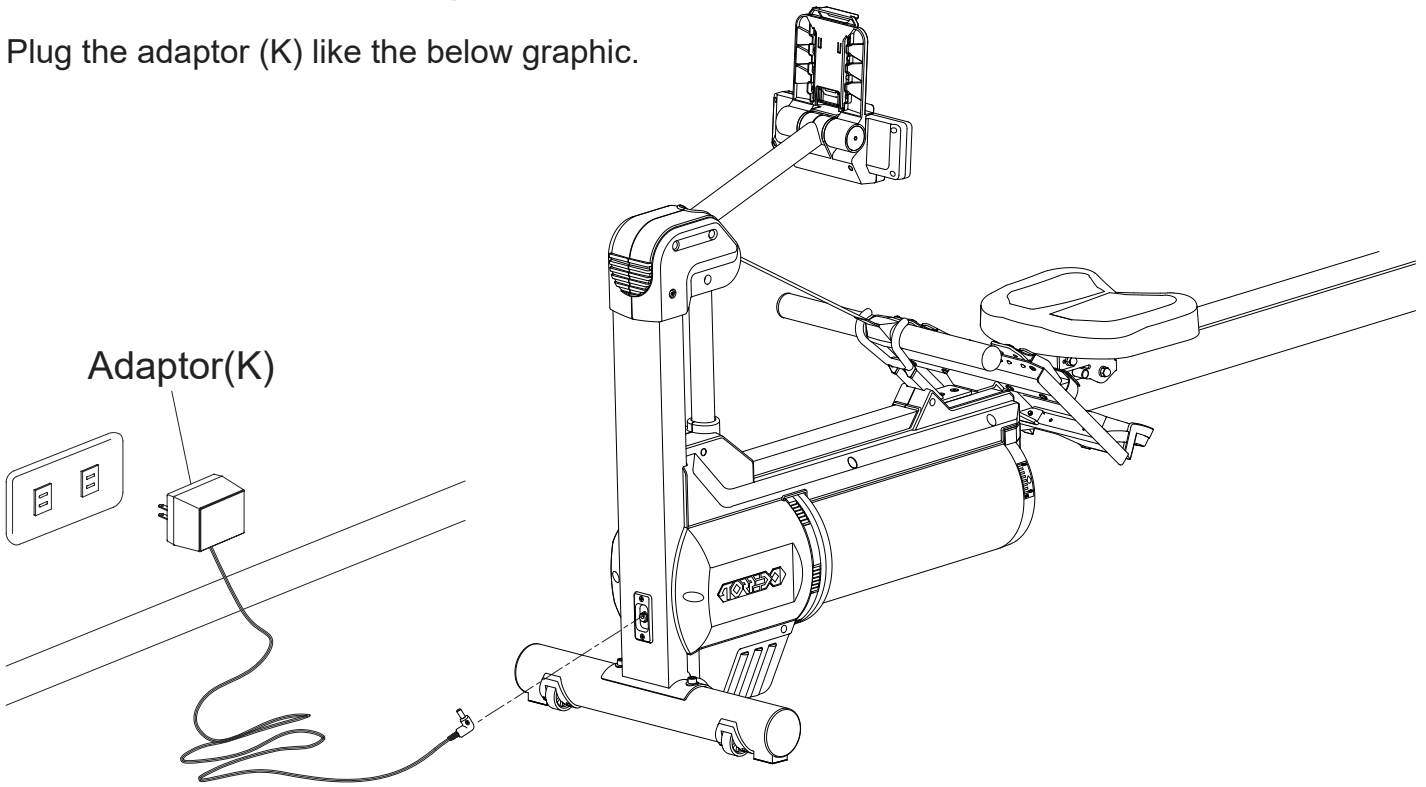

FIGURE 13

How to use the drum pump to fill the water tank?

Step 1. Remove the water tank rear cover, filling cover and the tank plug.
Step 2. Check the water flow direction on the pump and put the side where the water comes out from the drum pump inside the water tank. Put the other side beneath the water in your water bucket.
Step 3. Hold tight and release drum pump (E) for at least 5 times.You should be able to draw the water from the bucket by syphon.
Step 4. When the water level reaches the recommended level range on the water reference sticker on the water tank, stop filling the water tank.
Step 5. Put the tank plug, filling cover and water tank rear cover back to the original place after you finish filling the water.

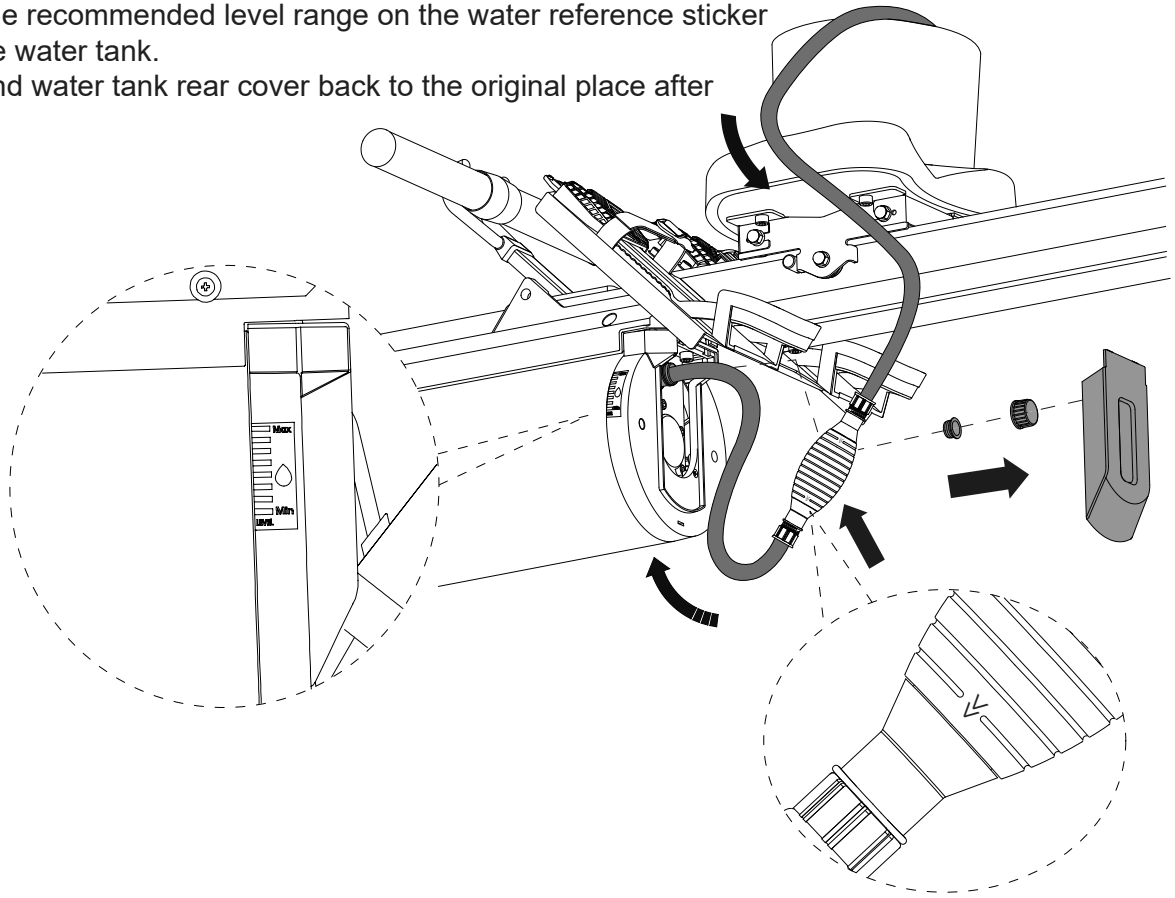

The arrow mark indicates the direction of the water flow.

FIGURE 14

How to Use the Syphon Drum Pump to draw the water from the Rower?

Step 1. Upright the Rower like below graphic.
Step 2. Place the water pipe so that it is able to draw the water inside the water tank.
Make sure it touches the bottom of the water tank.
Place the other water pipe inside the bucket.
Step 3. Hold tight and release drum pump (E) for at least 5 times.
You should be able to draw the water out from the water tank by syphon process.

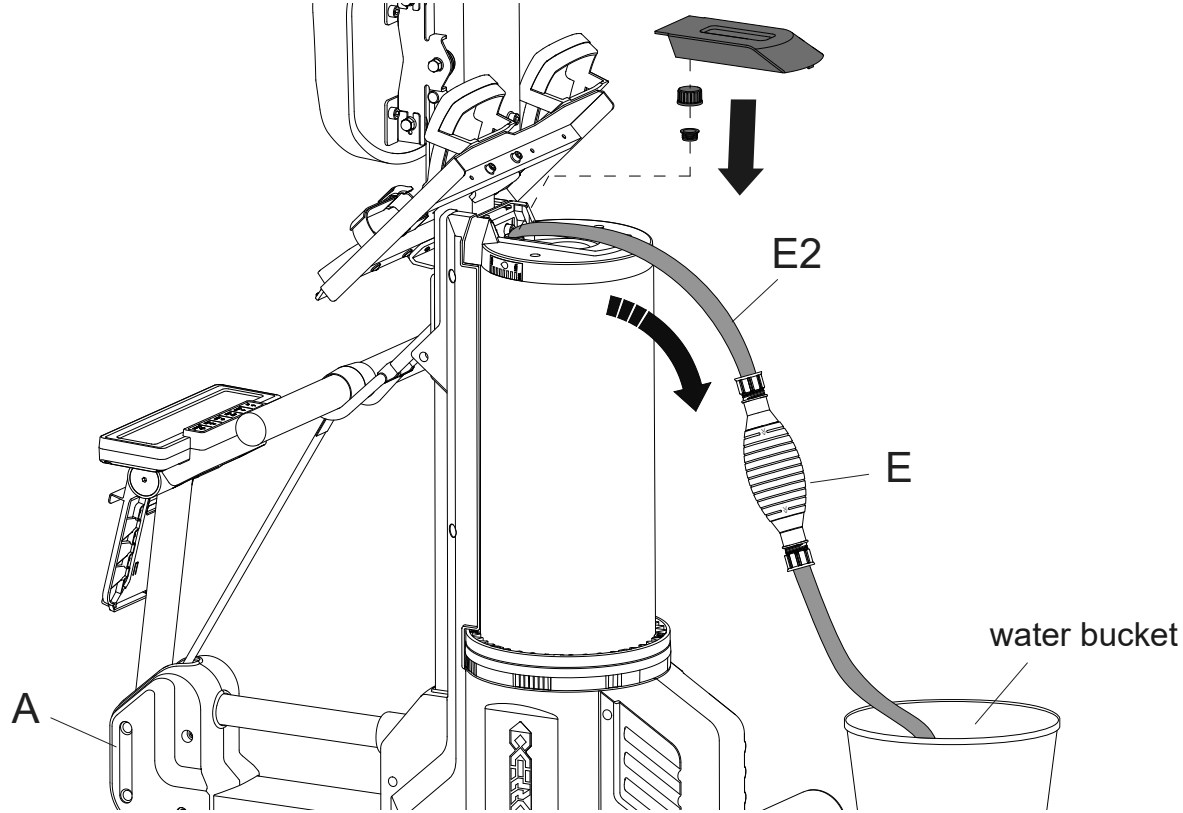

HOW TO ROW?

Sit on the saddle. Adjust the paddle to fit your feet. Fasten your feet on each pedal by straps well.
Grab the handle by two hands and then follow below rowing tips

1

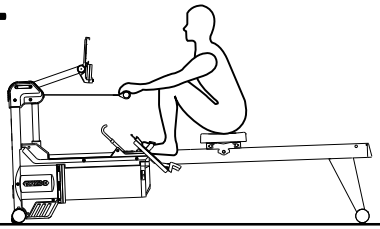

Comfortably forward with straight back and arms. This is CATCH

2

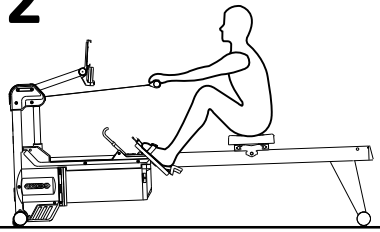

Start to push with legs while the arm remains straight.

3

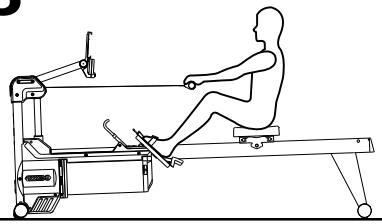

Knees are nearly straight. Lean slightly back from the hips.

4

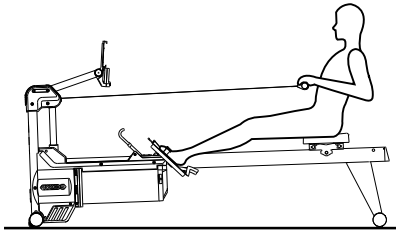

Legs fully extended. Pull with the arms. This is FINISH.

5

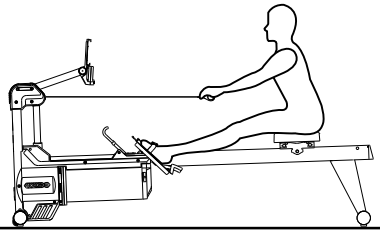

Lean slightly forward from the hips, arms out in front. Slide forward.

STORAGE AND TRANSPORTATION

After assembly, you can move the rower by lifting the rower from the rear stabilizer to let the wheels on the front stabilizer to touch the floor. Once the wheels touch the floor, you can move the rower easily. Don't tilt the rower left/right so that only one wheel touches the floor during the transportation. The water tank will be damaged if the rower falls left/right.

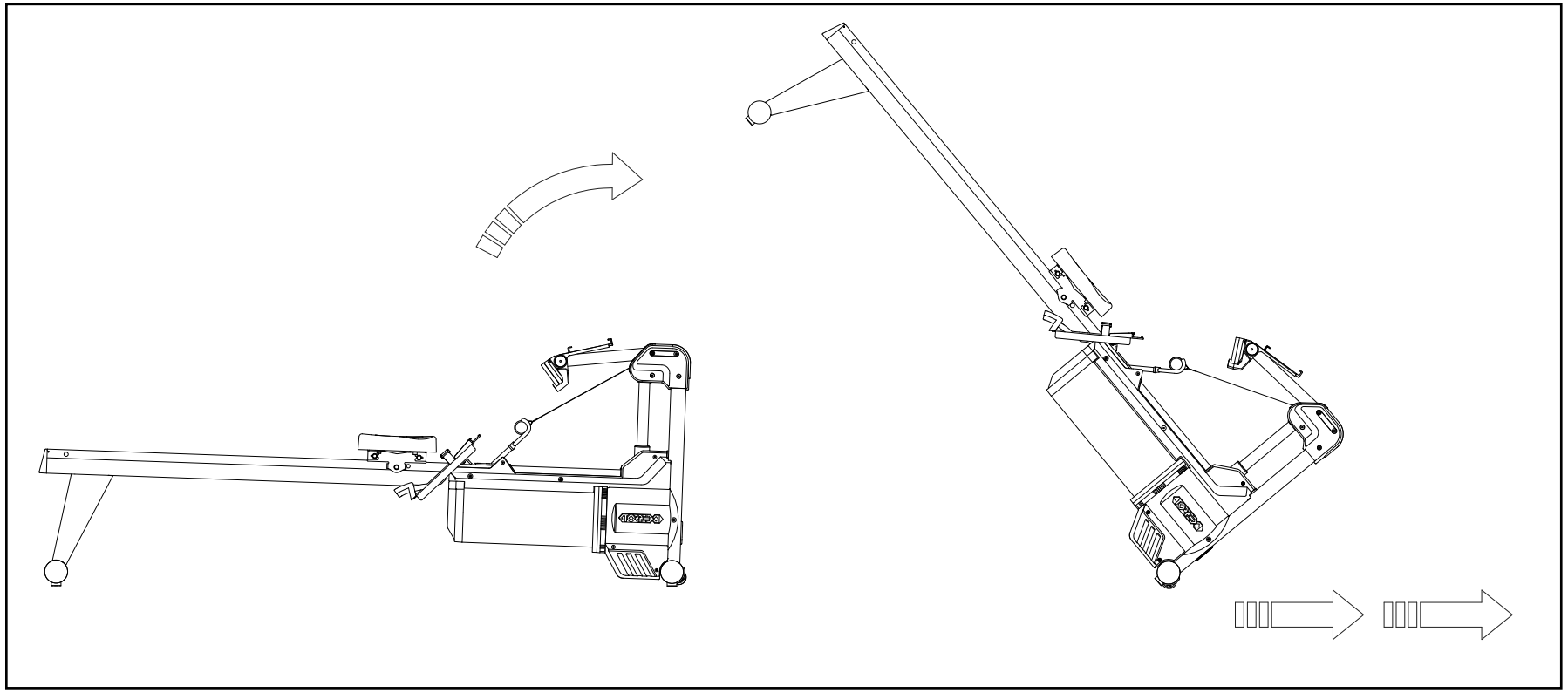

STORAGE AND TRANSPORTATION

You can stand the rower vertically to store it like below. However, before storing it vertically, please check if the floor is suitable for you to stand the rower vertically. If the floor is ragged or un-horizontal, you are not recommended to store it at this kind of floor.
It is recommended to put a thin cloth between the standing rower and the floor to prevent from scratching the floor.

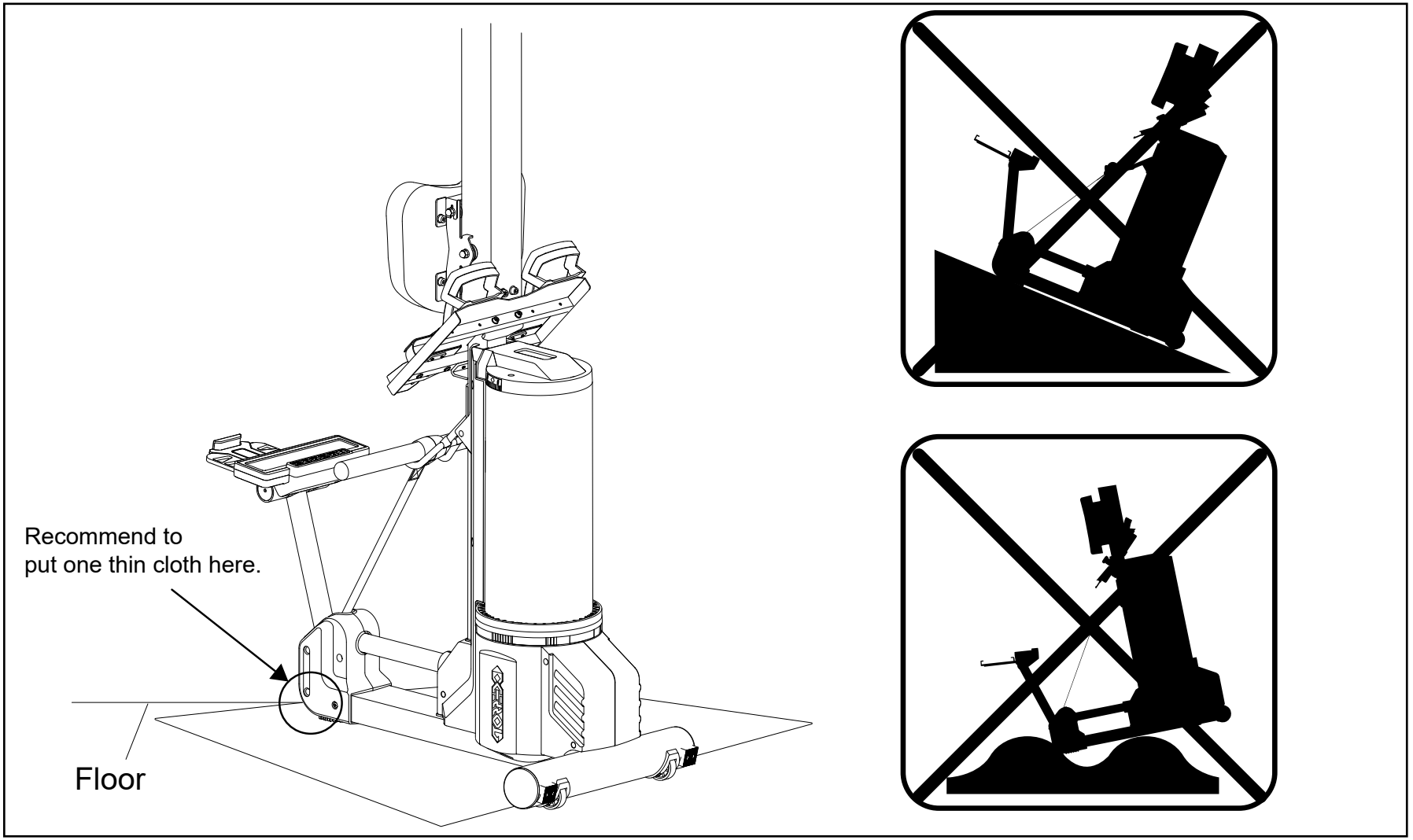

ABOUT YOUR MACHINE

Always use care and caution when operating your machine. Follow instruction in this manual to ensure safe operation and maintenance of your rower

Your new XTERRA Fitness rower has Bluetooth connectivity to give you access to the most advanced workout experiences available. Follow the instructions on page 32-34 to learn more about using the Bluetooth capabilities to their fullest potential.

Downloading the XTERRA+ app will help unlock more features - such as tracking workouts and sharing data via Google Fit and Apple Fitness. Simply search for "XTERRA+" in the app store on your smartphone or tablet, or scan the QR code on the right



The XTERRA Fitness app is available on Google Play and the Apple App Store. Scan the QR Code below, and quickly and easily sign up to start taking your workout experience to a whole new level.

Available on the App Store

GET IT ON Google play

Be sure to follow XTERRA Fitness on your favorite social media platforms to view and share the latest fitness videos, images, and news.

facebook.com/XterraFitness

www.instagram.com/XterraFitness

youtube.com/user/XterraFitnessOnline

USING THE XTERRA+ APP

In order to help you achieve your exercise goals, your new exercise machine comes equipped with a Bluetooth® transceiver that will allow it to interact with selected phones or tablet computers via the XTERRA+ App. Just download the free XTERRA+ App from the Apple Store or Google Play, and then follow the instructions in the App to sync with your exercise machine.

Press the “DISPLAY” button from the APP to view the display of the current workout data. When your exercise is complete, choose “END & SAVE WORKOUT” to store the workout data.

1. Download the App by scanning the QR code on the right.
2. Open the App on your device (phone or tablet) and make sure Bluetooth® is enabled on your device (phone or tablet).
3. In the App click the Bluetooth® icon to search for your XTERRA + equipment.
4. Under the Bluetooth® scan result list, select the machine for connect. When the App and equipment are synced, the Bluetooth® icon on the equipment’s console display will light up. Click “DISPLAY”, you may now start using your XTERRA + App.
5. When your exercise is complete, choose “END & SAVE WORKOUT” to store the workout data. You will be prompted to sync your data with each available fitness cloud site. Please note, you will have to download the applicable compatible fitness App, such as Strava, MapMyFitness, Fitbit, etc., in order for the icon to be active and available.

Note: Your device will need to be running on a minimum operating system of IOS 13.1 or Android 8.0 for the XTERRA + App to operate properly.



APP CONNECTION

Connection to Exercise App

Open the exercise App in your smart device.

Press it to restart the console.

Find the Bluetooth name ERG800 of this console in the App.

You can check the Bluetooth name of the console at the back of it.

Connect the console and your smart device.

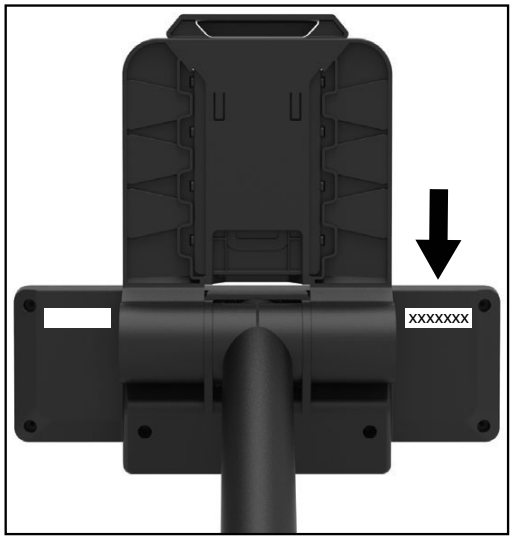

Note

When using KINOMAP fitness App link to find rower communication, please select FTMS communication for my Rower.

(The images found on page 34 are an iOS mobile phone.)

APP CONNECTION

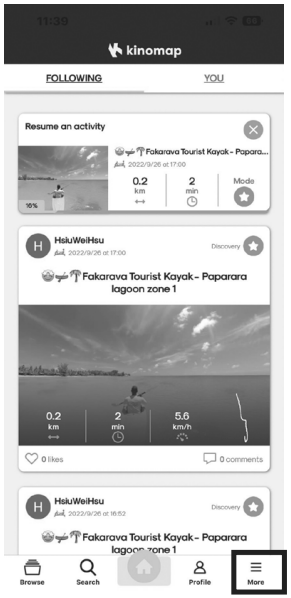

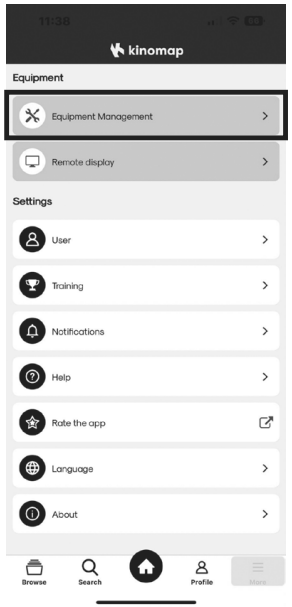

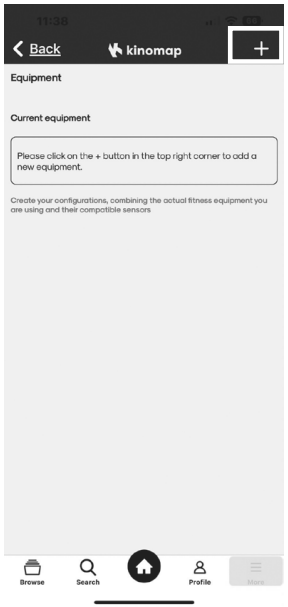

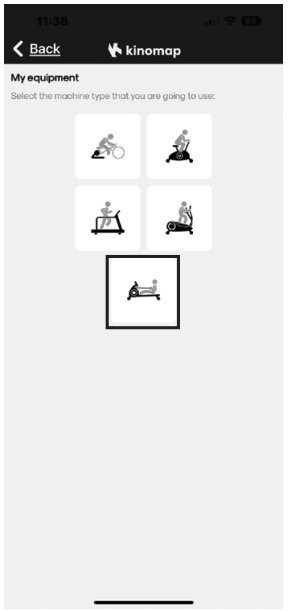

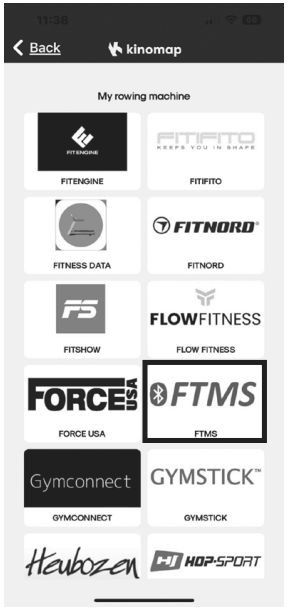

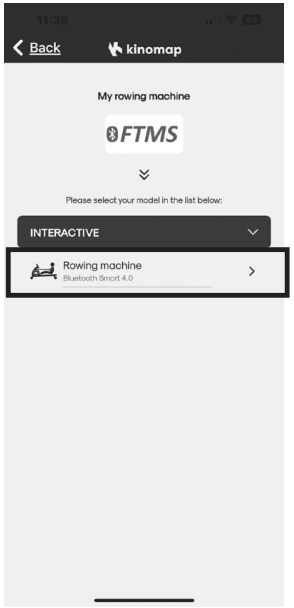

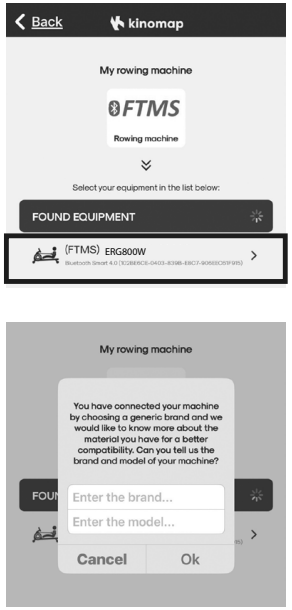

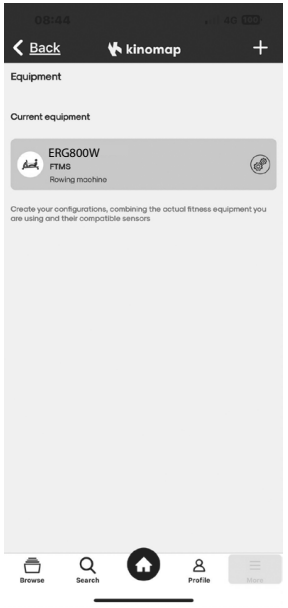

CONSOLE SCREEN - OVERVIEW



FUNCTION BUTTONS

Function of Each Button



Press to increase the input value/Under Standby mode, press to select program.



Press to decrease the input value/Under Standby mode, press to select program.



Press to start the training.
Once the training start, press to stop the training. Press again to continue the training.



Press to confirm or select each training mode.
Once the training start, press to check different exercising data.



Press it to restart the console.



Press to start the RECOVERY function during the training.

FUNCTION BUTTONS

Data Shown on the Console

DATA	DESCRIPTION	UNIT	RANGE
TIME	Time	Second	00:00 ~ 99:59
TIME/500M	Time to Finish 500m	Second	00:00 ~ 99:59
TIME/500M AVG	Average Time to Finish 500M	Second	00:00 ~ 99:59
METERS	Rowing Distance	Meter	0 ~ 99999
STROKES	Total Strokes	None	0 ~ 9999
SPM	Strokes per Minute	None	0 ~ 99
PULSE	Heart Rate Per Minute	None	40 ~ 240
WATTS	Power	Watt	0 ~ 9999
WATT AVG	Average Power	Watt	0 ~ 9999
CALORIES	Consumed Energy	Calories	0 ~ 9999
CALORIES/HOUR	Consumed Energy per Hour	Calories	0 ~ 9999

FUNCTION BUTTONS

Heart Rate Source

5.3 KHZ Chest Belt/Bluetooth Chest Belt (Not included)

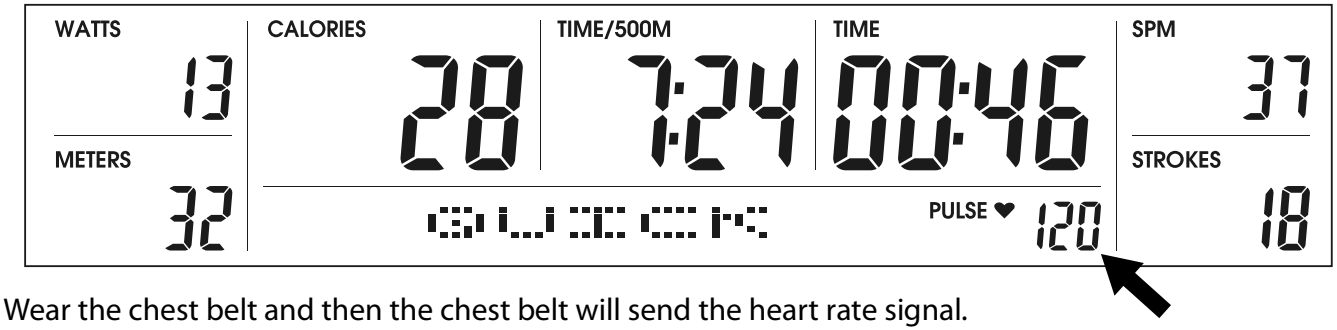

Wear the chest belt and then the chest belt will send the heart rate signal.

If the console receives the heart rate signal, the heart rate will be shown on the console

Take the above figure as an example. If your heart rate is 120, the console will display 120.

** Chest Belt is sold separately.
Please contact the service center to ask if they sell the chest belt suitable for this rower.

FUNCTION BUTTONS

Function Introduction

Standby Mode

Console will be in Standby Mode when it is powered on or after RESET is pressed for 3 seconds.

QUICK START

In Standby Mode, press START/STOP or pull the handle to begin QUCK START.

TIME PROGRAM

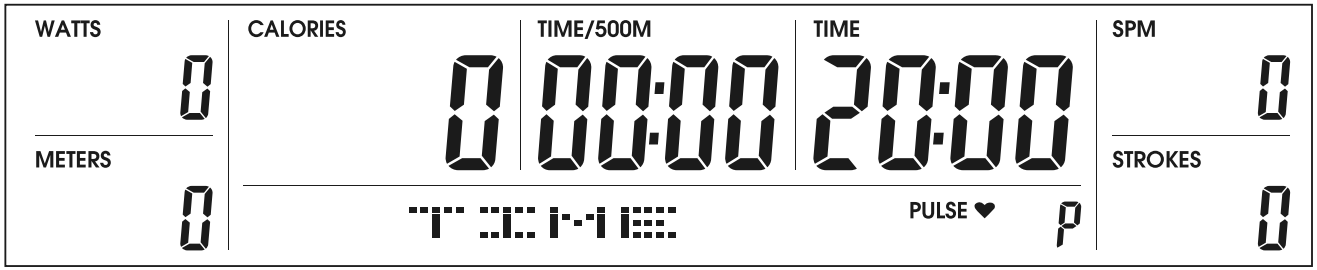

1. Under Standby Mode, press UP/DOWN till the training mode turns into TIME PROGRAM.
2. Press ENTER and then press UP/DOWN to adjust the TIME to your desired training time. Default is 20:00. Each Step is 01:00. Adjustable range is 05:00~99:00.

Once you finish adjusting the TIME, press ENTER and then press START to start the training

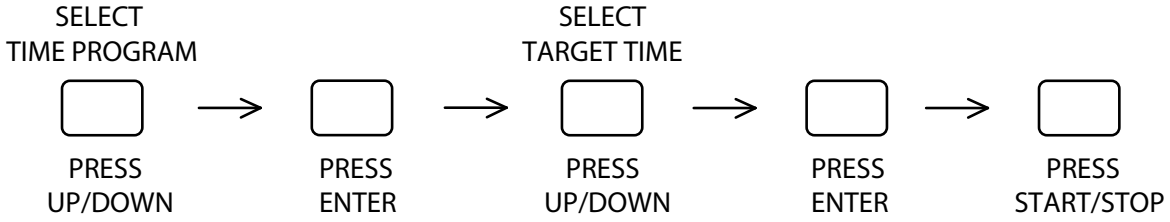

PROGRAMS

METERS PROGRAM

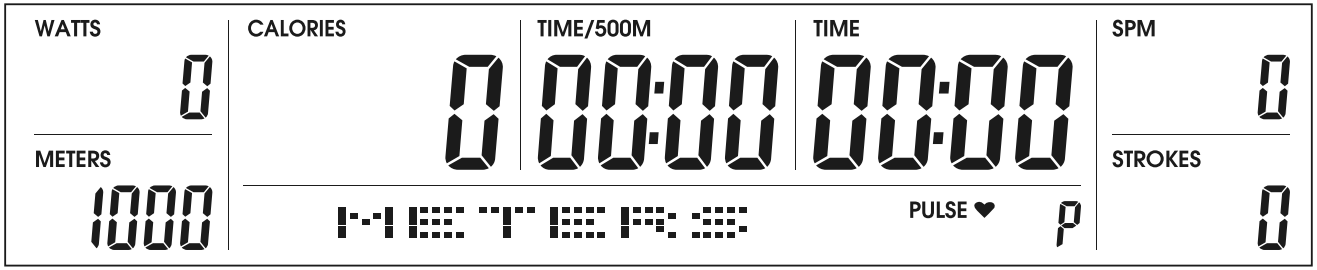

1. Under Standby Mode, press UP/DOWN till the training mode turns into METERS PROGRAM.
2. Press ENTER and then press UP/DOWN to adjust the METERS to your desired training distance. Default is 1000 METERS. Each Step is 100 METERS. Adjustable range is 100~9900 METERS.
3. Once you finish adjusting the METERS, press ENTER and then press START to start the training.
4. The METERS will count down during the training.

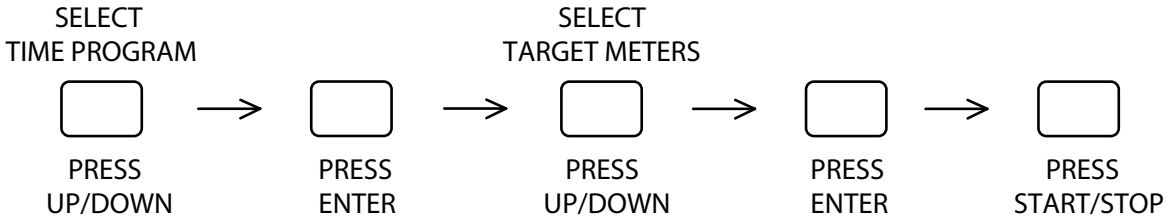

PROGRAMS

CALORIES PROGRAM

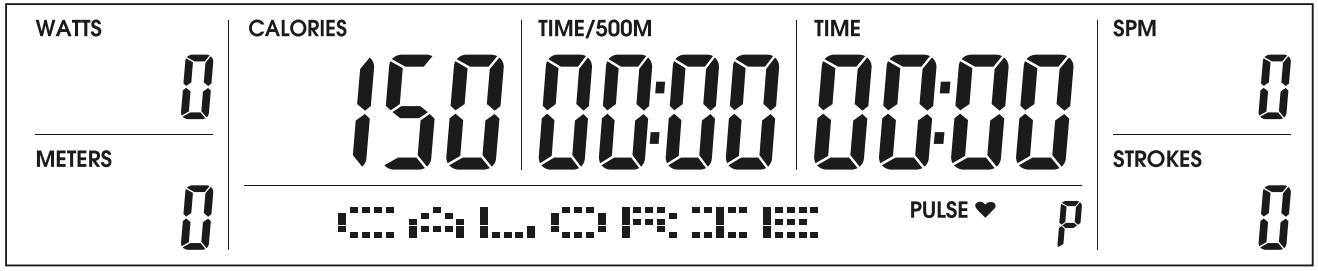

1. Under Standby Mode, press UP/DOWN till the training mode turns into CALORIES PROGRAM.
2. Press ENTER and then press UP/DOWN to adjust the CALORIE to your desired training calories. Default is 150 Cals. Each Step is 10 Cals. Adjustable range is 10~990 Cals.
3. Once you finish adjusting the CALORIES, press ENTER and then press START to start the training.
4. The CALORIES will count down during the training.

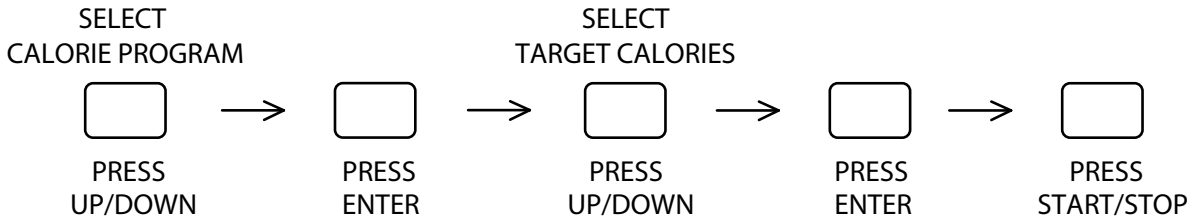

PROGRAMS

STROKES PROGRAM

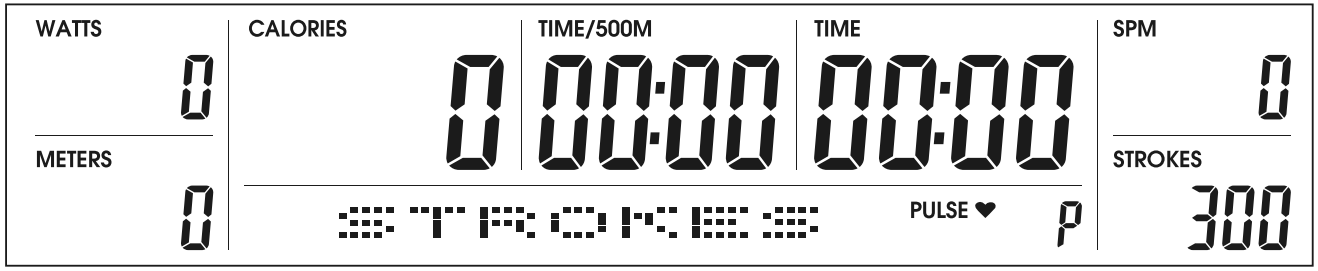

1. Under Standby Mode, press UP/DOWN till the training mode turns into STROKES PROGRAM.
2. Press ENTER and then press UP/DOWN to adjust the STROKES to your desired training strokes. Default is 300. Each Step is 10. Ajdustable range is 10~990.
3. Once you finish adjusting the STROKES, press ENTER and then press START to start the training.
4. The STROKES will count down during the training.

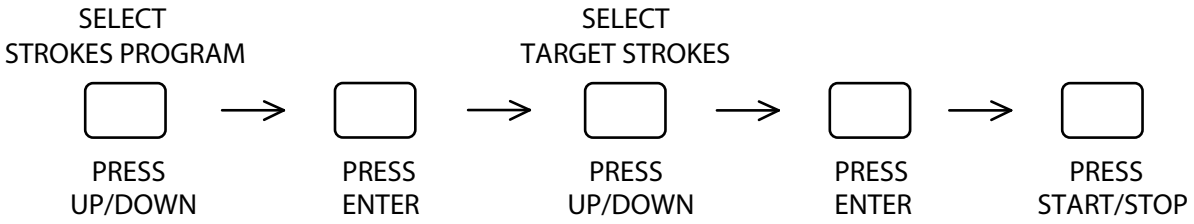

PROGRAMS

INTERVAL 20/10 PROGRAM

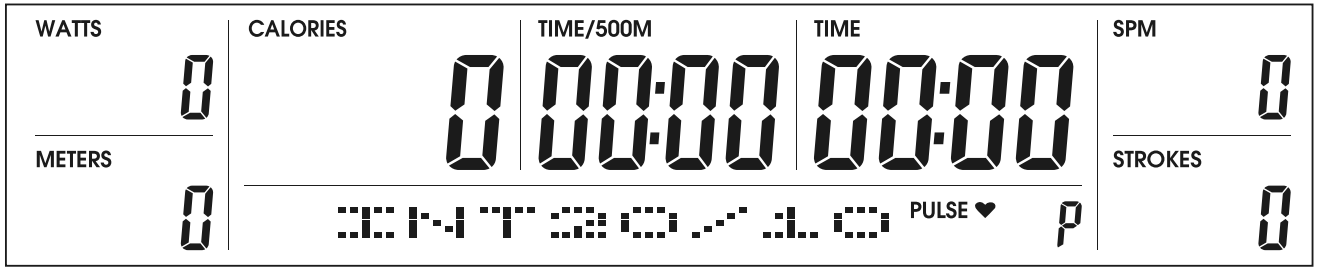

1. Under Standby Mode, press UP/DOWN till the training mode turns into INT 20/10 PROGRAM.
2. Press ENTER and then press UP/DOWN to adjust the CYCLE to your desired training cycle. Default is 10. Each Step is 1. Adjustable range is 01~99.
3. Once you finish adjusting the CYCLE, press ENTER and then press START to start the training.
4. Each CYCLE includes 20-second-train and 10-second-rest.
5. The CYCLE will count down during the training.

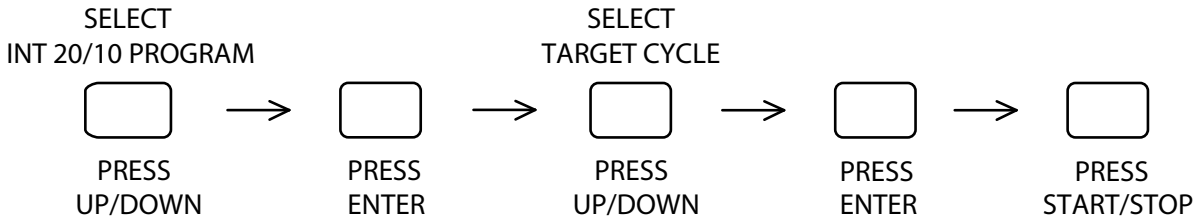

PROGRAMS

INTERVAL 20/30 PROGRAM

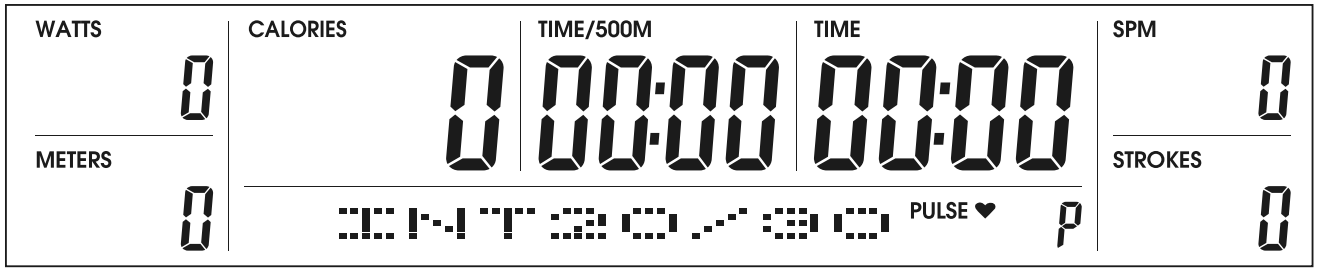

1. Under Standby Mode, press UP/DOWN till the training mode turns into INT 20/30 PROGRAM.
2. Press ENTER and then press UP/DOWN to adjust the CYCLE to your desired training cycle. Default is 10. Each Step is 1. Adjustable range is 01~99.
3. Once you finish adjusting the CYCLE, press ENTER and then press START to start the training.
4. Each CYCLE includes 20-second-train and 30-second-rest
5. The CYCLE will count down during the training.

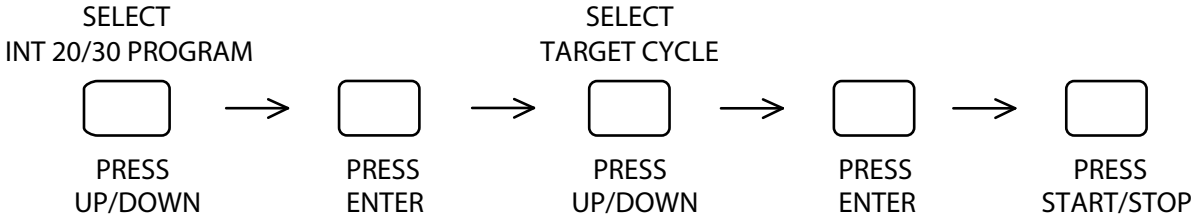

PROGRAMS

INTERVAL CUST PROGRAM

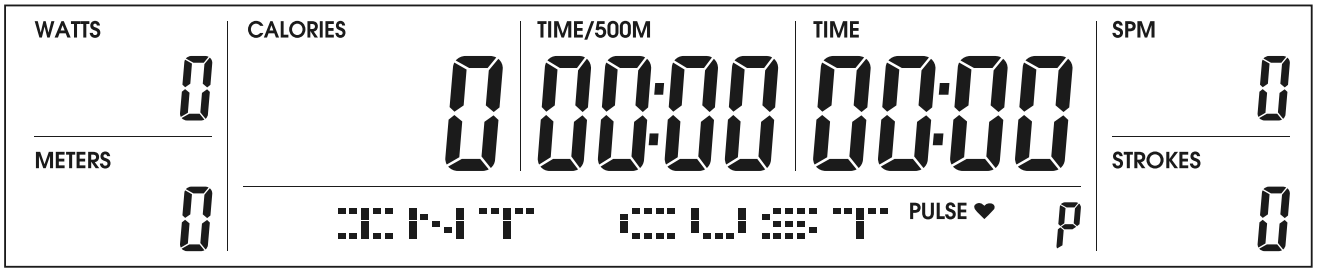

1. Under Standby Mode, press UP/DOWN till the training mode turns into INT CUST PROGRAM.
2. Press ENTER and then press UP/DOWN to adjust the WORK TIME to your training time of each CYCLE. Default is 20 Seconds. Each Step is 1 Second. Adjustable range is 05~599.
3. Press ENTER and then press UP/DOWN to adjust the REST TIME to your resting time of each CYCLE.
4. Default is 10 Seconds. Each Step is 1 Second. Adjustable range is 05~599.
5. Press ENTER and then press UP/DOWN to adjust the CYCLE to your desired training cycle. Default is 10. Each Step is 1. Adjustable range is 01~99.
6. Press ENTER and then press START to start the training.
7. Each CYCLE includes the WORK TIME you setup and REST TIME you setup.
8. The CYCLE will count down during the training.

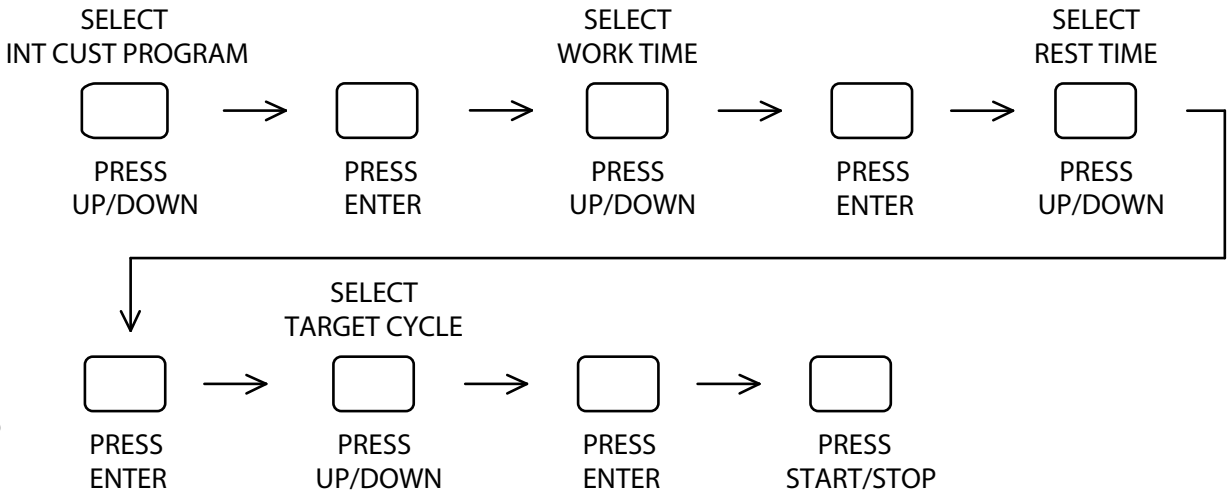

PROGRAMS

SPM PROGRAM

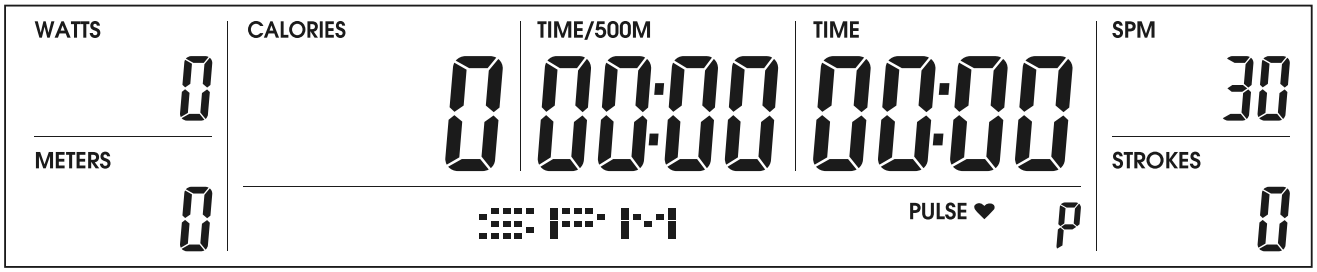

1. Under Standby Mode, press UP/DOWN till the training mode turns into SPM PROGRAM.
2. Press ENTER and then press UP/DOWN to adjust the SPM to your desired training strokes in 1 minute. Default is 30. Each step is 1. Adjustable range is 10~99.
3. Press ENTER and then press START to start the training.
4. During the Training, the console will show like below.
   If SPM is lower than the SPM you set, it will show FASTER.
   If SPM is higher than the SPM you set, it will show SLOWER.
   If SPM is equal to the SPM you set, it will show GREAT.

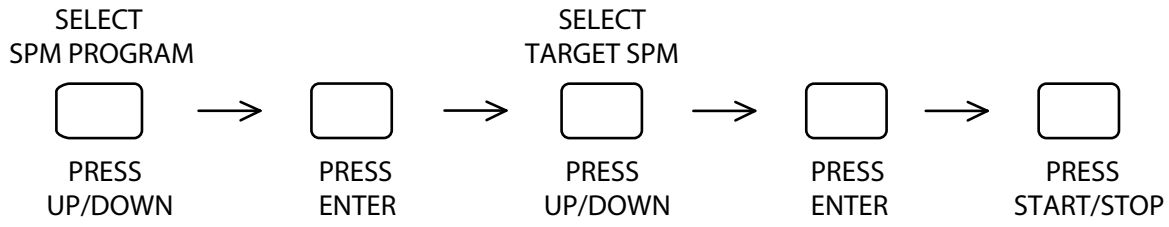

PROGRAMS

RACE PROGRAM

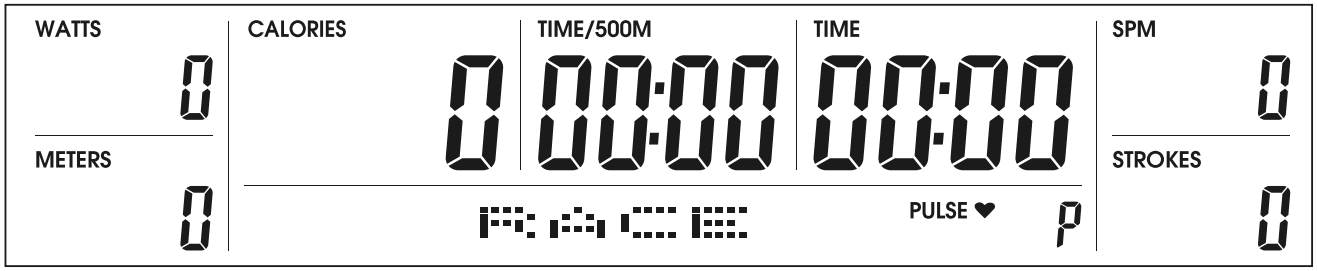

1. Under Standby Mode, press UP/DOWN till the training mode turns into RACE PROGRAM.
2. Press ENTER and then press UP/DOWN to adjust the computer's rowing pace.
   HIGH-TIME/500M: 02:15
   MEDIUM-TIME/500M: 03:00
   LOW-TIME/500M: 03:30
   CUSTOM-TIME/500M: Set by yourself. Default is 3:00. Each step is 00:01. Adjustable range is 01:00~09:55.
3. Press ENTER and then press UP/DOWN to adjust the distance of the race. (METERS)
   Default is 500 METERS. Each step is 100 METERS. Adjustable range is 100~9900 Meters.
4. Press ENTER and then press START/STOP to start the training.
   You control the Y ship. Computer controls the C ship.
5. While the race ends, the console shows YOU WIN if you finish the race first.
   Otherwise, it shows YOU LOSE.

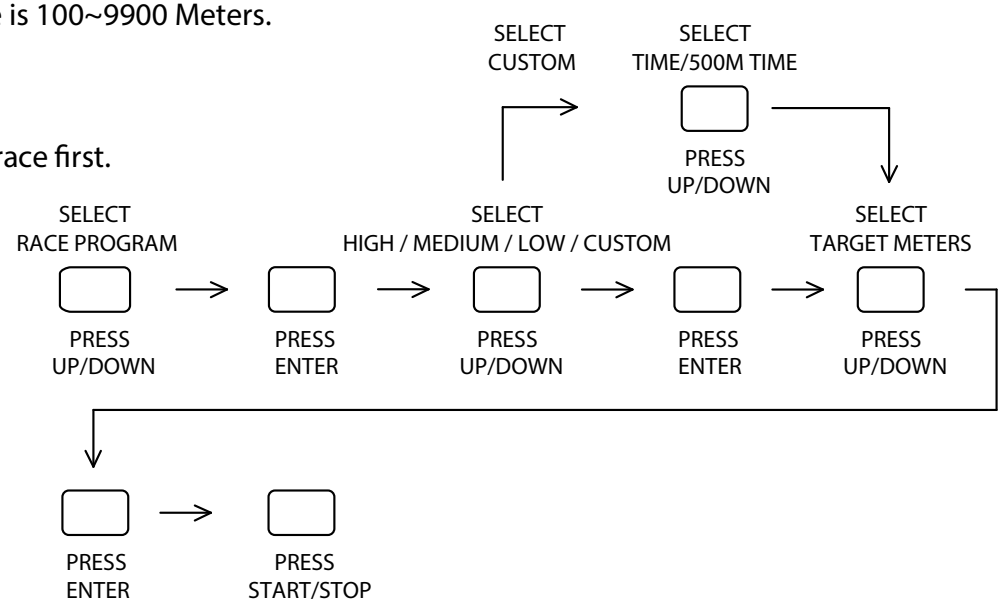

PROGRAMS

TARGET HR PROGRAM

*Chest Strap required. Chest Strap sold separately.

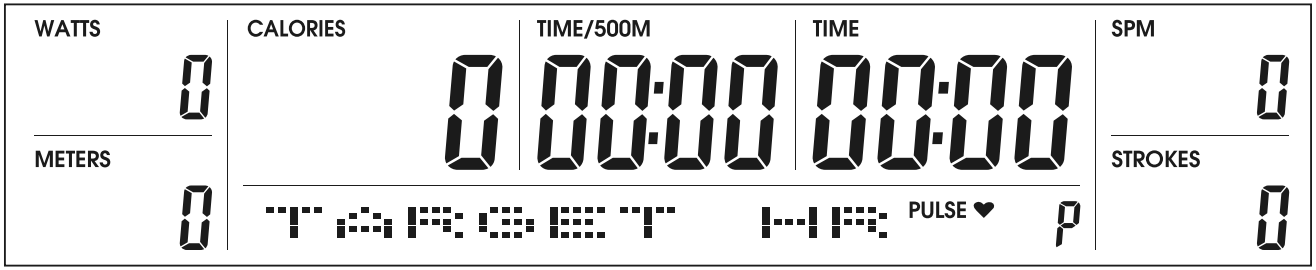

1. Under Standby Mode, press UP/DOWN till the training mode turns into HR PROGRAM.
2. Press ENTER and then press UP/DOWN to adjust the HR to your desired training heart rate (HR).
   Default is 130. Each step is 5. Adjustable range is 100~180.
3. Press ENTER and then press UP/DOWN to adjust your desired HR training interval.
   Default is 30. Each step is 5. Adjustable range is 20~50.
4. Press ENTER and then press START to start the training.
5. During the Training, the console will show like below.
   If HR is lower than the HR you set, it will show SPEED UP.
   If HR is higher than the SPM you set, it will show SLOW DOWN.
   If HR is higher than HR interval for 2 minutes, it will show GOOD and then stop training for 30 seconds.

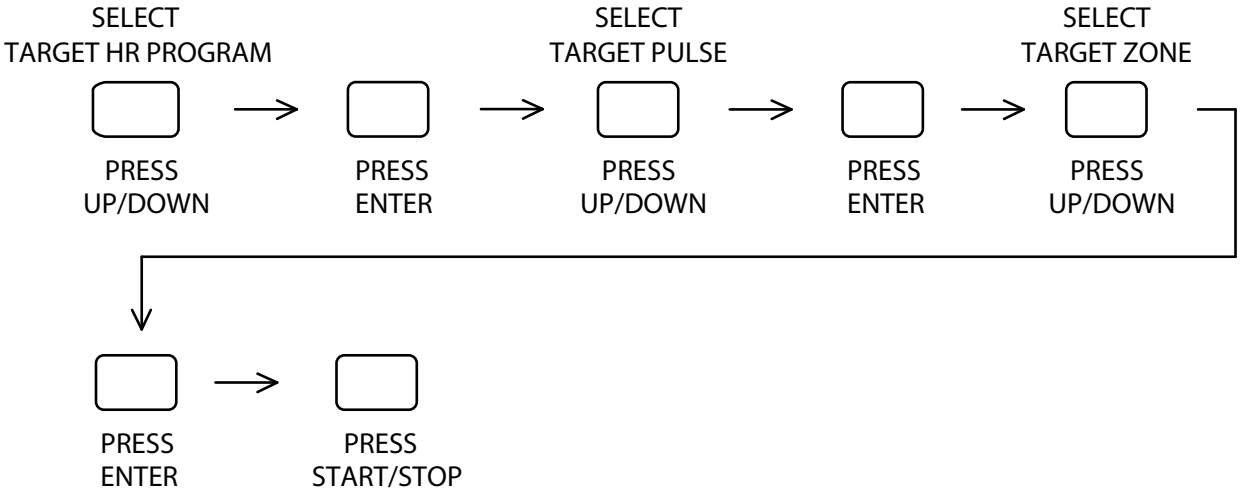

PROGRAMS

RECOVERY FUNCTION *Chest Strap required. Chest Strap sold separately.

1. Under Each Program, Press RECOVERY to detect the Heart Rate Recovery Function.
2. After pressing the RECOVERY, you will see 60 seconds count down.
3. After 60 seconds count down, it will show the result.
4. If the console hasn't received heart rate signal for 10 seconds, it will turn into REC: FAIL
5. If the console hasn't received heart rate signal for 20 seconds, it will stop

Result	Fitness level
F1	Very good
F2	Good
F3	Average
F4	Sufficient
F5	Poor
F6	Very poor

HEART RATE CHEST STRAP* (NOT INCLUDED)

1. Attach the transmitter to the elastic strap using the interlocking key.
2. Adjust the strap as tightly as possible as long as the strap is not too tight to remain comfortable.
3. Position the transmitter with the logo centered in the middle of your torso facing away from your chest (some people must position the transmitter slightly left of center). Attach the final end of the elastic strap by inserting the round end and, using the locking parts, secure the transmitter and strap around your chest.
4. Position the transmitter directly below the pectoral muscles.
5. Sweat is the best conductor to measure very minute heart beat electrical signals. However, plain water can also be used to pre-wet the electrodes (2 ribbed oval areas on the reverse side of the belt and both sides of the transmitter). It's also recommended that you wear the transmitter strap a few minutes before your work out. Some users, because of body chemistry, have a more difficult time in achieving a strong, steady signal at the beginning. After "warming up", this problem lessens.
6. Your workout must be within range - distance between transmitter/receiver – to achieve a strong steady signal. The length of range may vary somewhat but generally stay close enough to the console to maintain good, strong, reliable readings. Wearing the transmitter directly on bare skin assures you of proper operation. If you wish, you may wear the transmitter over a shirt. To do so, wet the areas of the shirt that the electrodes will rest upon.

Note: The transmitter is automatically activated when it detects activity from the user's heart. Additionally, it automatically deactivates when it does not receive any activity. Although the transmitter is water resistant, moisture can have the effect of creating false signals, so you should take precautions to completely dry the transmitter after use to prolong battery life (estimated transmitter battery life is 2500 hours). The replacement battery is Panasonic CR2032.

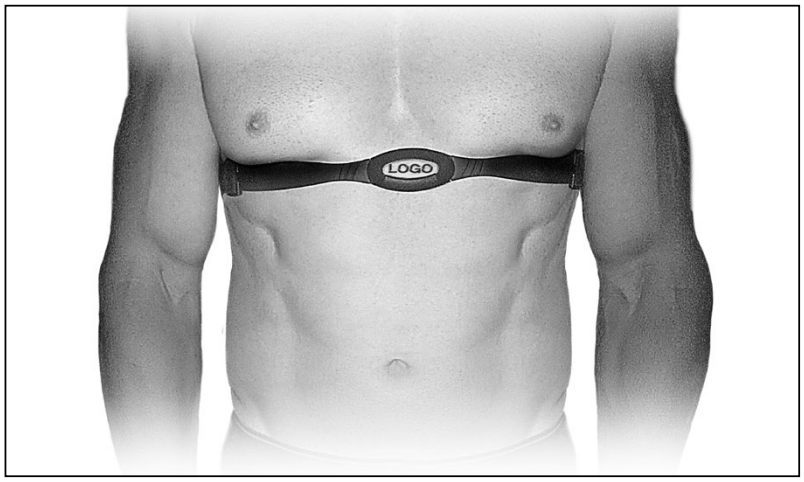

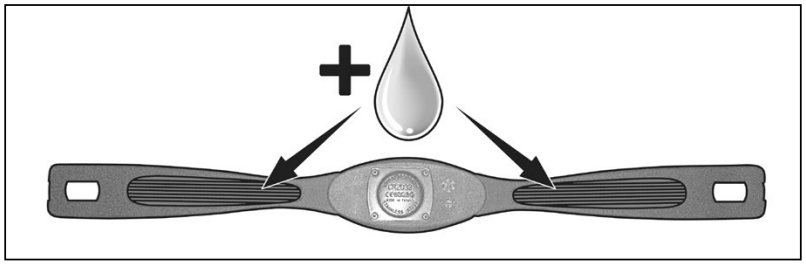

CHEST STRAP WARNING* (NOT INCLUDED)

Erratic Operation

Caution! Do not use this treadmill for Heart Rate programs unless a steady, solid Actual Heart Rate value is being displayed. High, wild, random numbers being displayed indicate a problem.

Areas to look for interference which may cause erratic heart rate:

1. Microwave ovens, TV's, small appliances, etc.
2. Fluorescent lights.
3. Some household security systems.
4. Perimeter fence for a pet.
5. Some people have problems with the transmitter picking up a signal from their skin. If you have problems try wearing the transmitter upside down. Normally the transmitter will be oriented so the XTERRA Fitness logo is right side up.
6. The antenna that picks up your heart rate is very sensitive. If there is an outside noise source, turning the whole machine 90 degrees may de-tune the interference.
7. Another Individual wearing a transmitter within 3' of your machine's console.

If you continue to experience problems contact XTERRA Fitness.

HEART RATE EXERTION

The old motto, “no pain, no gain”, is a myth that has been overpowered by the benefits of exercising comfortably. A great deal of this success has been promoted by the use of heart rate monitors. With the proper use of a heart rate monitor, many people find that their usual choice of exercise intensity was either too high or too low and exercise is much more enjoyable by maintaining their heart rate in the desired benefit range.

To determine the benefit range in which you wish to train, you must first determine your Maximum Heart Rate. This can be accomplished by using the following formula: 220 minus your age. This will give you the Maximum Heart Rate (MHR)for someone of your age. To determine the effective heart rate range for specific goals you simply calculate a percentage of your MHR. Your Heart rate training zone is 50% to 90% of your maximum heart rate. 60% of your MHR is the recommended for burning fat while 80% is recommended for strengthening the cardio vascular system. This 60% to 80% is the zone to stay in for maximum benefit.

For someone who is 40 years old their
target heart rate zone is calculated:
220 – 40 = 180 (maximum heart rate)
180 x .6 = 108 beats per minute (60% of maximum)
180 X .8 = 144 beats per minute (80% of maximum)
So for a 40 year old the training zone would
be 108 to 144 beats per minute.

If you enter your age during programming the console will perform this calculation automatically. Entering your age is used for the Heart Rate programs. After calculating your MHR you can decide upon which goal you would like to pursue.

The two most popular reasons for, or goals, of exercise are cardiovascular fitness (training for the heart and lungs) and weight control. The black columns on the chart represent the MHR for a person whose age is listed at the bottom of each column. The training heart rate, for either cardiovascular fitness or weight loss, is represented by two different lines that cut diagonally through the chart. A definition of the lines’ goal is in the bottom left-hand corner of the chart. If your goal is cardiovascular fitness or if it is weight loss, it can be achieved by training at 80% or 60%, respectively, of your MHR on a schedule approved by your physician. Consult your physician before participating in any exercise program.

With this XTERRA Fitness unit you may use the heart rate monitor feature without using the Heart Rate program. However, when using the heart rate monitor feature in conjunction with the Heart Rate programs, the machine will automatically adjust speed or incline to maintain the desired heart rate.

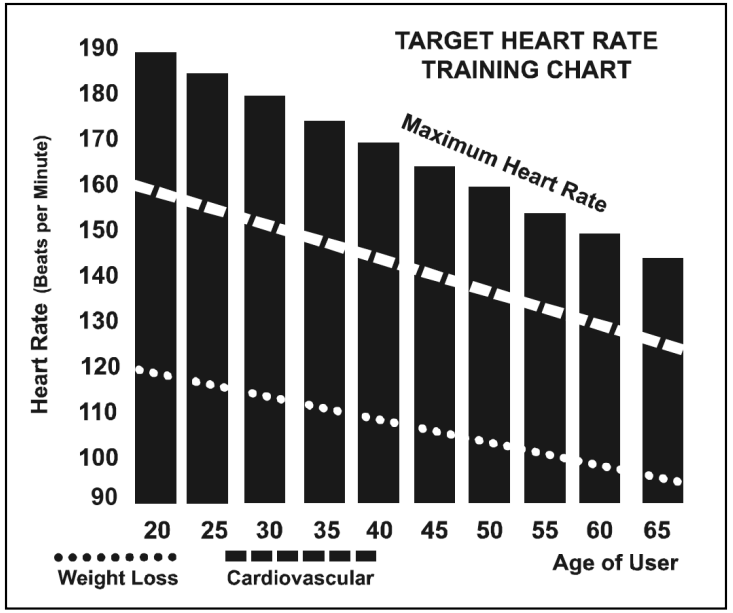

HEART RATE - PERCEIVED EXERTION

Heart rate is important but listening to your body also has a lot of advantages. There are more variables involved in how hard you should workout than just heart rate. Your stress level, physical health, emotional health, temperature, humidity, the time of day, the last time you ate and what you ate all contribute to the intensity at which you should workout. If you listen to your body it will tell you all of these things.

The rate of perceived exertion (RPE), also known as the Borg scale, was developed by Swedish physiologist G.A.V. Borg.
This scale rates exercise intensity from 6 to 20 depending upon how you feel or the perception of your effort.
The scale is found to the side of the page:

You can get an approximate heart rate level for each rating by simply adding a zero to each rating. For example a rating of 12 will result in an approximate heart rate of 120 beats per minute. Your RPE will vary depending on the factors discussed earlier. If your body is strong and rested, you will feel strong and your pace will feel comfortable. When your body is in this condition, you are able to train harder and the RPE will support this. If you are feeling tired and sluggish, it is because your body needs a break. In this condition, your pace will feel difficult. Again, this will show up in your RPE and you will train at the proper level for that day.

Rating Perception of Effort

6	Minimal
7	Very, Very Light
8	Very, Very Light +
9	Very Light
10	Very Light +
11	Fairly Light
12	Comfortable
13	Somewhat Hard
14	Somewhat Hard +
15	Hard
16	Hard +
17	Very Hard
18	Very Hard +
19	Very, Very Hard
20	Maximal

MAINTENANCE & CARE

Post-Workout Machine Care

1. Store your machine in a dry and clean area when not in use.
2. Use a slightly damp cloth to clean areas where sweat or oil made contact with the machine.
3. Use a microfiber cloth to clean the display and remove unwanted oils and other things that may damage the screen.

During the training or during maintenance, stop using the rower immediately if any signs of excessive wearing are present on the belt, pulleys, pedal straps and straps. These are components most susceptible to wear. Do not use until said parts are repaired or replaced.

Sanitizing Your XTERRA Fitness Equipment

- Unupholstered high-contact surfaces (hard plastics) can be sanitized using a 75% isopropyl alcohol solution and a clean, dry cloth. Spray surfaces to be sanitized, and use the dry cloth to wipe clean. Allow surfaces to dry before using.
- For upholstered or soft-plastic surfaces, use a conditioner after sanitizing. Be sure to follow the instructions provided by the conditioner manufacturer to ensure proper use of the conditioner.
- Alternatively, you can make your own spray by mixing the proper ratio of isopropyl alcohol and distilled water to reach a 75% solution.

Item	Frequency	Instructions
Saddle & Aluminum Rail	Every Week	Wipe down seat wheels and side rails with lint free cloth.
Main Frame	Every Week	Wipe down Frame with lint free cloth.
Water in the Tank	Every Half Year	Draw out the water and fill clean water inside
Rowing Belt	Every Hundred Hours Usage	Check if any signs of wear

EXPLODED VIEW DIAGRAM

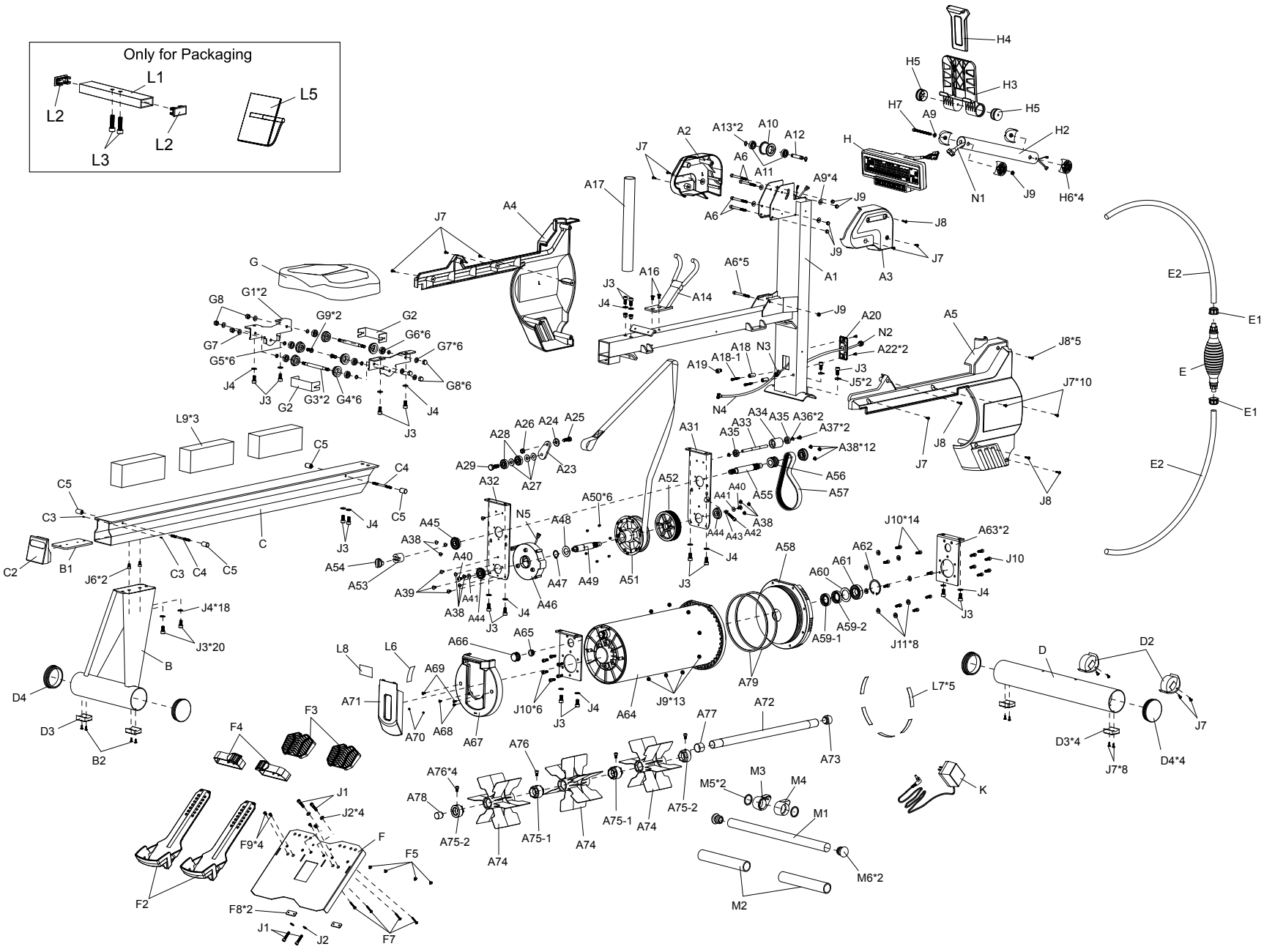

WARRANTY - RESIDENTIAL

Effective September 26, 2023- **ERG800W Water Rowing Machine LIMITED WARRANTY**

XTERRA Fitness Inc. warrants all its home use Water Rowing Machine parts for a period of time listed below, from the date of retail sale, as determined by a sales receipt or in the absence of a sales receipt, eighteen (18) months from the original factory shipping date. XTERRA Fitness's responsibilities include providing new or remanufactured parts, at XTERRA Fitness's option, and technical support to our independent dealers and servicing organizations. In the absence of a dealer or service organization, these warranties will be administered by XTERRA Fitness directly to a consumer. The warranty period applies to the following components:

Home Use Limited Warranty

Warranty	Frame	Parts
Residential	3 Years	1 Year

RESPONSIBILITIES OF THE CONSUMER

This warranty applies only to products in ordinary household use, and the consumer/facility is responsible for the items listed below:

1. Proper use of the Water Rowing Machine in accordance with the instructions provided in this manual
2. Proper installation in accordance with instructions provided with the Water Rowing Machine and with all local electric codes.
3. Expenses for making the Water Rowing Machine accessible for servicing, including any item that was not part of the Water Rowing Machine at the time it was shipped from the factory.
4. Damages to the Water Rowing Machine finish during shipping, installation or following installation.
5. Routine maintenance of this unit as specified in this manual.

WARRANTY - CONTINUED

What is not covered?

EXCLUSIONS

This warranty does not cover the following:

1. CONSEQUENTIAL, COLLATERAL, OR INCIDENTAL DAMAGES SUCH AS PROPERTY DAMAGE AND INCIDENTAL EXPENSES RESULTING FROM ANY BREACH OF THIS WRITTEN OR ANY IMPLIED WARRANTY.
   Note: Some states do not allow the exclusion or limitation of incidental or consequential damages, so this limitation or exclusion may not apply to you.
2. Service call reimbursement to the consumer. Service call reimbursement to the dealer that does not involve malfunction or defects in workmanship or material, for units that are beyond the warranty period, for units that are beyond the service call reimbursement period, for Water Rowing Machine not requiring component replacement, or Water Rowing Machine not in ordinary household or light commercial use.
3. Damages caused by services performed by persons other than authorized XTERRA Fitness service companies; use of parts other than original XTERRA Fitness parts; or external causes such as corrosion, discoloration of paint or plastic, alterations, modifications, abuse, misuse, accident, improper maintenance, inadequate power supply, or acts of God.
4. Products with original serial numbers that have been removed or altered.
5. Products that have been: sold, transferred, bartered, or given to a third party.
6. XTERRA Fitness reserves the right to request proof of purchase if no warranty record exists for the product.
7. THIS WARRANTY IS EXPRESSLY IN LIEU OF ALL OTHER WARRANTIES EXPRESSED OR IMPLIED, INCLUDING THE WARRANTIES OF MERCHANTABILITY AND/OR FITNESS FOR A PARTICULAR PURPOSE.
8. Product use in any environment other than a residential setting or non-dues paying facility with 5 hours use or less per day.
9. Warranties outside of the United States may vary. Please contact your local dealer for details.

Product features or specifications as described or illustrated are subject to change without notice. All warranties are made by XTERRA Fitness, Inc. This warranty applies only in the 48 contiguous United States. NOTE: This does not include Alaska or Hawaii.

WARRANTY - CONTINUED

Responsibilities of the Owner

SERVICE

Keep your bill of sale. Twelve (12) months from the date on the bill of sale or eighteen (18) months from the date of factory shipping as determined by the serial number establishes the labor warranty period should service be required. If service is performed, it is in your best interest to obtain and keep all receipts. This written warranty gives you specific legal rights. You may also have other rights that vary from state to state. Service under this warranty must be obtained by following these steps, in order:

1. Contact your selling authorized XTERRA Fitness dealer. OR
2. Contact your local authorized XTERRA Fitness service organization.
3. If there is a question as to where to obtain service, contact our service department at (870) 935-1107.
4. XTERRA Fitness' obligation under this warranty is limited to repairing or replacing, at XTERRA Fitness' option, the product through one of our authorized service centers. All repairs must be preauthorized by XTERRA Fitness. If the product is shipped to a service center freight charges to and from the service center will be the customer's responsibility. For replacement parts shipped while the product is under warranty, the customer will be responsible for shipping and handling charges. For in-home service, the customer will be responsible for a trip charge. There will be an additional trip charge if the customer is located over 100 miles from the nearest service center.
5. The owner is responsible for adequate packaging upon return to XTERRA Fitness. XTERRA Fitness is not responsible for damages in shipping. Make all freight damage claims with the appropriate freight carrier. DO NOT SHIP ANY UNIT TO OUR FACTORY WITHOUT A RETURN AUTHORIZATION NUMBER. All units arriving without a return authorization number will be refused.

For any further information, or to contact our service department by mail, send your correspondence to:

XTERRA Fitness, Inc.

P.O. Box 2037

Jonesboro, AR 72402-2037

Product features or specifications as described or illustrated are subject to change without notice. All warranties are made by XTERRA Fitness, Inc. This warranty applies only in the 48 contiguous United States. NOTE: This does not apply to Alaska or Hawaii.

3000 Nestle Road Jonesboro, AR 72401 | Phone: 800-258-8511 | Fax: 870-935-7611

©2023 All Rights Reserved. ERG800W Owner's Manual