XTERRA® FITNESS™



EU**100** HYBRID ELLIPTICAL UPRIGHT BIKE **OWNER'S MANUAL**

PLEASE CAREFULLY READ THIS ENTIRE MANUAL BEFORE OPERATING
YOUR NEW HYBRID ELLIPTICAL UPRIGHT BIKE

Congratulations On Your New Hybrid Elliptical Upright Bike and Welcome to the XTERRA Fitness Family!

Thank you for your purchase of this quality Hybrid Elliptical Upright Bike from **XTERRA Fitness**. Your new Hybrid Elliptical Upright Bike has been manufactured by one of the leading fitness manufacturers in the world. **XTERRA Fitness** will do all we can to make your ownership experience as pleasant as possible for many years to come. If you have questions, or if parts are missing or damaged, or you require customer service, call (870) 333-5500. Please have your model number and serial number handy when you call.

Please take a moment to record where you purchased your machine, as well as the date of purchase for future reference. We appreciate your confidence in **XTERRA Fitness** and we will always remember that you are the reason that we are in business. Please complete and mail your registration card today and enjoy your new Hybrid Elliptical Upright Bike.

Yours in Health,
XTERRA Fitness

Table Of Contents

Product Registration	**1**
Important Safety Instructions	**2**
EU100 Assembly Instructions	**4**
Operation of Your Console	**12**
Manufacturer's Limited Warranty	**15**

ATTENTION

THIS FITNESS HYBRID ELLIPTICAL UPRIGHT BIKE IS INTENDED FOR **RESIDENTIAL USE ONLY** AND IS WARRANTED FOR THE APPLICATION. ANY OTHER APPLICATION **VOIDS** THIS WARRANTY IN ITS ENTIRETY.

Product Registration

Purchase Location _____

Purchase Date _____

Record Your Serial Number
Please record the Serial Number of this fitness product
in the space provided below.

Serial Number _____

Register Your Purchase
The self-addressed product registration card must be completed in full and returned to **XTERRA Fitness**. You can also go to ***www.xterrafitness.com/warrantyreg.html*** to register online.

Important Safety Instructions

When using an electrical appliance, basic precautions should always be followed, including the following:

Read all instructions before using this appliance.

WARNING - To reduce the risk of burns, fire electric shock, or injury to persons:

1. Do not operate under blanket or pillow. Excessive heating can occur and cause fire, electric shock, or injury to persons.
2. This exercise equipment is not intended for use by persons with reduced physical, sensory or mental capabilities, or lack of experience and knowledge.
3. Use this appliance only for its intended use as described in this manual. Do not use attachments not recommended by the manufacturer.
4. Never operate the appliance with the air openings blocked. Keep the air openings free of lint, hair, and the like.
5. Never drop or insert any object into any opening.
6. Do not use outdoors.
7. Do not operate where aerosol (spray) products are being use or where oxygen is being administered.
8. The appliance is intended for household use.



WARNING: This product can expose you to chemicals including Toluene and Acrylamide which are known to the State of California to cause cancer and birth defects or other reproductive harm.
For more information go to www.P65Warnings.ca.gov

Fitness Equipment Safety Instructions

- Do not operate equipment on deeply padded, plush or shag carpet. Damage to both carpet and equipment may result.
- Before beginning this or any exercise program, consult a physician. This is especially important for persons over the age of 35 or persons with pre-existing health conditions.
- Keep hands away from all moving parts.
- The pulse sensors are not medical devices. Various factors, including the user's movement, may affect the accuracy of heart rate readings. The pulse sensors are intended only as exercise aids in determining heart rate trends in general.
- Do not attempt to use your equipment for any purpose other than for the purpose it is intended.
- Wear proper shoes. High heels, dress shoes, sandals or bare feet are not suitable for use on your equipment. Quality athletic shoes are recommended to avoid leg fatigue.

Failure to follow all guidelines may compromise the effectiveness of the exercise experience, expose yourself (and possibly others) to injury, and reduce the longevity of the equipment.

SAVE THESE INSTRUCTIONS - THINK SAFETY!

CAUTION!! Please be careful when unpacking the carton.

Before you begin

Thank you for selecting our revolutionary XTERRA EU100 Hybrid Elliptical Upright Bike. Walking is an effective exercise for increasing cardiovascular fitness, building endurance, and toning the body. Our fitness Hybrid Elliptical Upright Bike provides an impressive selection of features designed to make your workouts at home more effective and enjoyable.

For your benefit, read this manual carefully before you use you fitness Hybrid Elliptical Upright Bike. To help us assist you, note the product model number and serial number before contacting us. Before reading further, please familiarize yourself with the parts that are labeled in the drawing below.

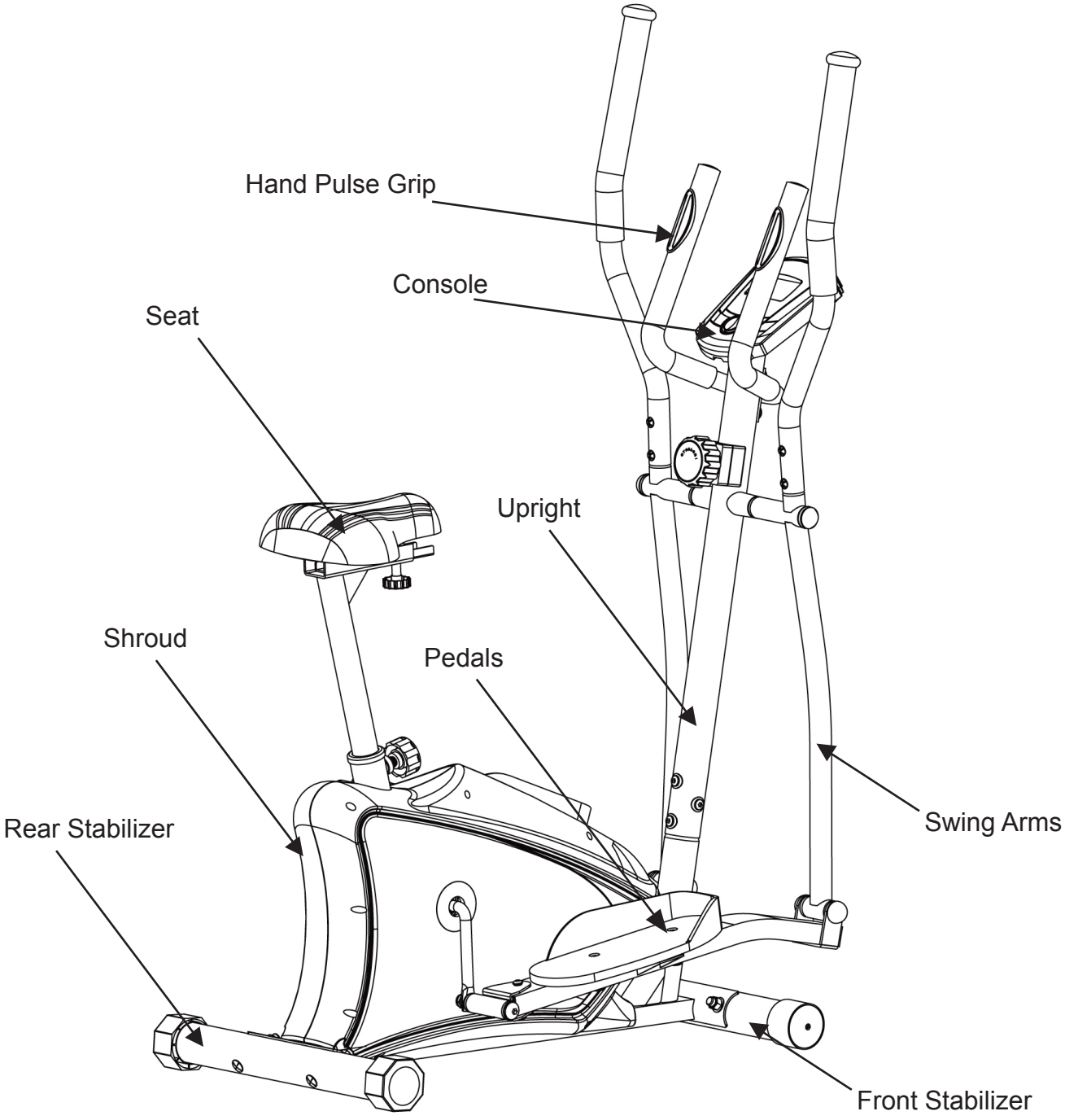

EU**100** Pre-Assembly Check List

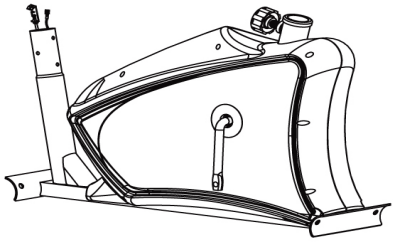

NO : 1

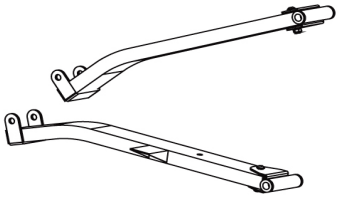

NO : 11/12

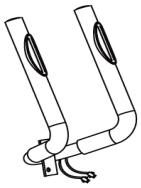

NO : 18



NO : 22

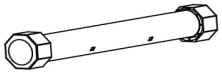

NO : 4

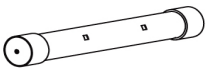

NO : 2

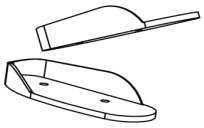

NO : 9/10



NO : 19

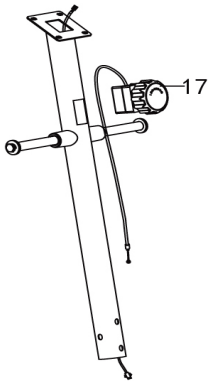

NO : 13/17



NO : 20

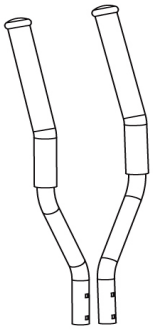

NO : 16/64

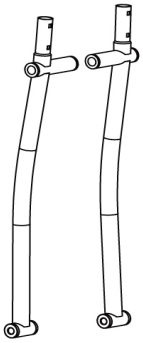

NO : 14/15

PART NO.	DESCRIPTION	Q'TY
1	Main Frame	1
11/12	Pedal Tube (L/R)	1/1
18	Stationary Handlebar	1
22	Seat	1
4	Rear Stabilizer	1
2	Front Stabilizer	1
9/10	Pedal (L/R)	1/1
19	Computer	1
13/17	Front Post / 8-Level Tension Control Knob	1/1
20	Seat Post	1
16/64	Upper Handlebar (L/R)	1/1
14/15	Bottom Handlebar (L/R)	1/1
	Hardware Bag	1
	Manual	1

EU**100** Assembly Pack Checklist

Part No.	Description	Q'ty
6	Curved Washer Φ22*Φ10	4
7	Dome Nut M10	4
8	Carriage Bolt M10*75	4
30	Allen Screw M8*16	6
31	Curved Washer Φ20*Φ8	6
32	PVC CAP	6
33	Hex Head Screw M10*20	2
34	Spring Washer Φ10	2
35	Washer Φ32*Φ10	2
36	D Type Washer	2
37	Carriage Bolt	4
38	Allen Screw M6*12	4
39	Hex Head Bolt M10*78	2
40	Sleeve	2
41	Washer Φ10*Φ22	6
42	Nylon Nut M10	6
44	Carriage Bolt M10*45	4
45 L/R	Hinge Bolt (L/R)	1/1
46	Wave Washer Φ16	2
47	Washer Φ27*Φ13	2
48 L/R	Lock Nut (L/R)	1/1
	Allen Key 4mm	1
	Allen Key 6mm	1
	Allen Key 8mm	1
	Allen Wrench	2

Note: Above parts are all the parts needed to assemble this machine. Before you start to assemble, please check the hardware packing to make sure they are included.

EU**100** Assembly Instructions

1 Front Stabilizer and Rear Stabilizer

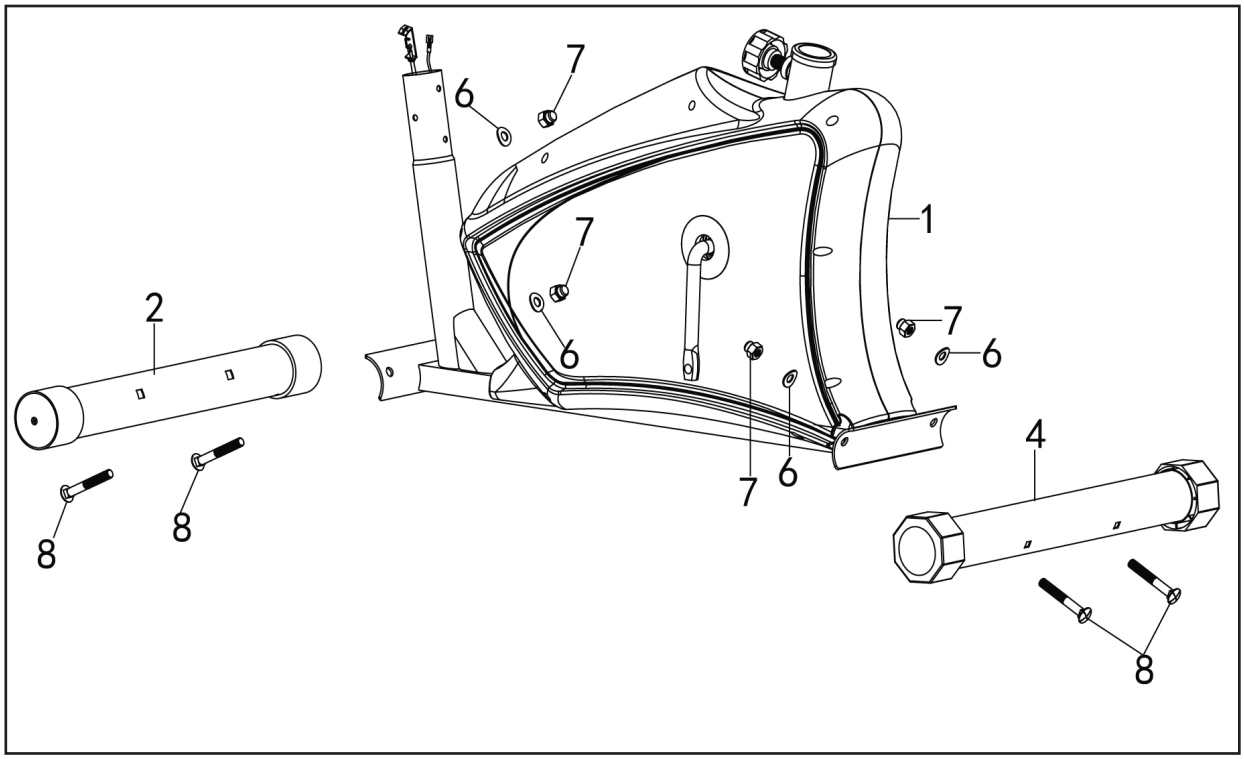

1. Attach the **Front Stabilizer (2)** to the front of the **Main Frame (1)**, fasten with two **Carriage Bolts (8)**, two **Curved Washers (6)** and two **Domed Nuts (7)**.

2. Repeat for the **Rear Stabilizer (4)** to the rear of the **Main Frame (1).**

Hardware Step 1

4 Carriage Bolts (#8)
4 Curved Washers (#7)
4 Domed Nuts (#7)

2 Support Tube

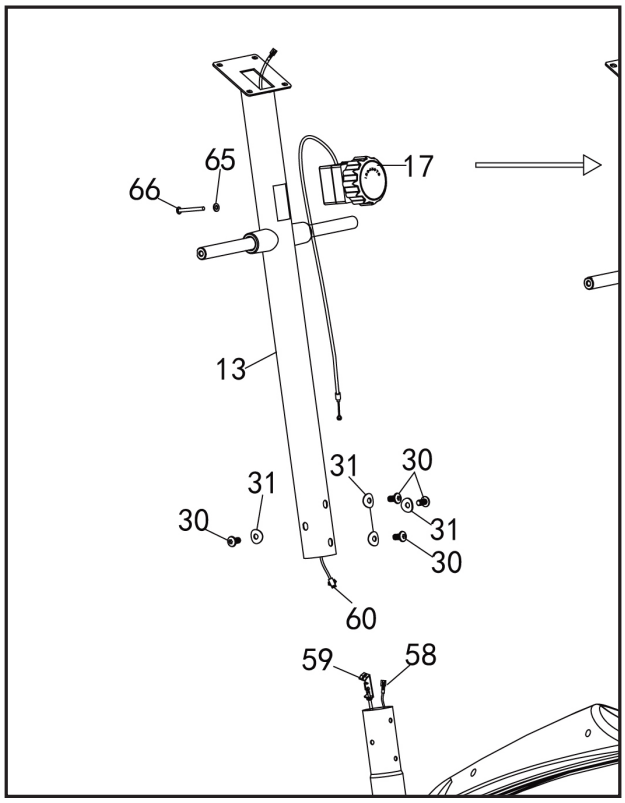

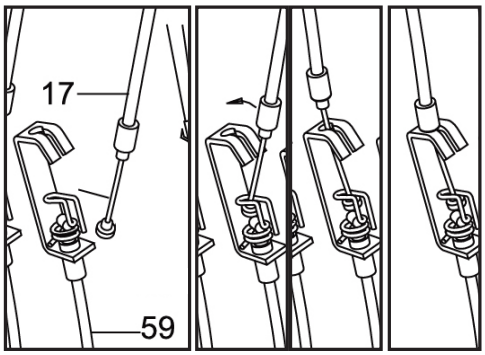

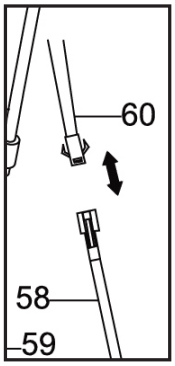

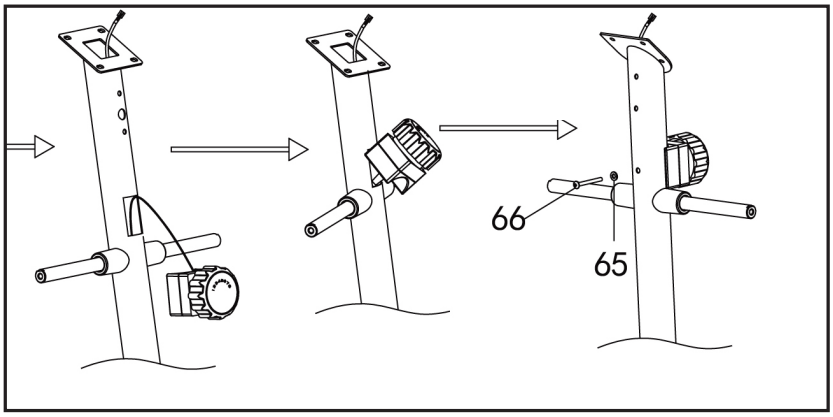

Hardware Step 2

4 Allen Screws (#30)
4 Curved Washers (#31)

Pre-assembled on tension control knob:
1 Washer (#65)
1 Bolt (#66)

1. Turn the **Tension Control Knob (17)** to level 8. Connect the **Tension Control Knob (17)** with **Lower Tension Cable (59)**, connect **Lower Sensor Wire (58)** with **Upper Sensor Wire (60)**.

2. Tighten the **Tension Control Knob** with one **Washer (65)** and **Bolt (66)**.

3. Insert the **Front Post (13**) into the **Main Frame (1)**, tighten with four ***Allen Screws (30)*** and four **Curved Washers (31)**.

EU**100** Assembly Instructions

3 Bottom Handlebars

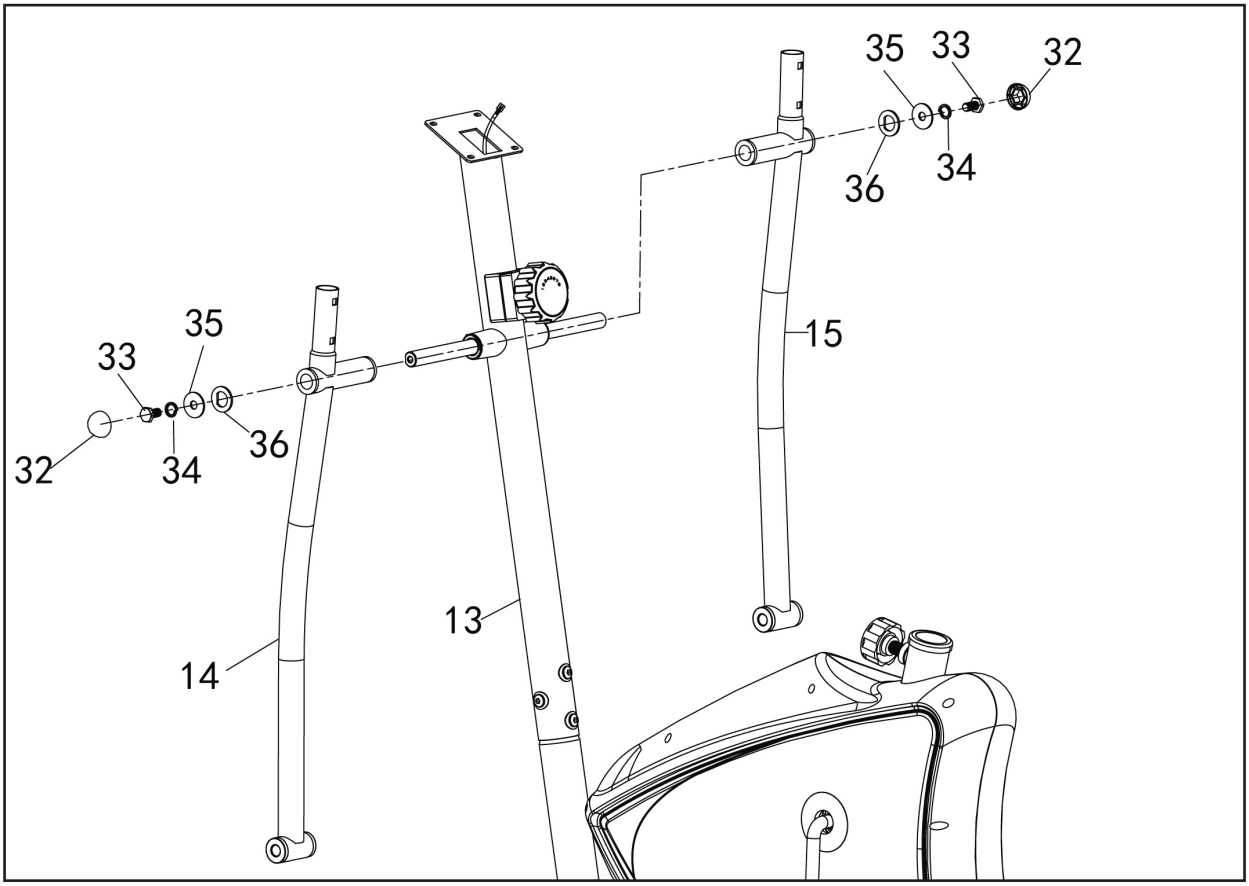

1. Attach the **Left Bottom Handlebar (14)** to the left side axle of the **Front Post (13)**. Secure using one **D Type Washer (36)**, one **Washer (35)**, one **Spring Washer (34)** and one **Hex Head Screw (33)**. Attach the **PVC Cap (32)** onto the **Hex Head Screw (33)**.

2. Repeat for the **Right Bottom Handlebar (15)** to the right side axle of the **Front Post (13)**.

Hardware Step 3

2 D Type Washers (#36)
2 Washers (#35)
2 Spring Washers (#34)
2 Hex Head Screws (#33)
2 PVC Caps (#32)

4 Pedal Tubes

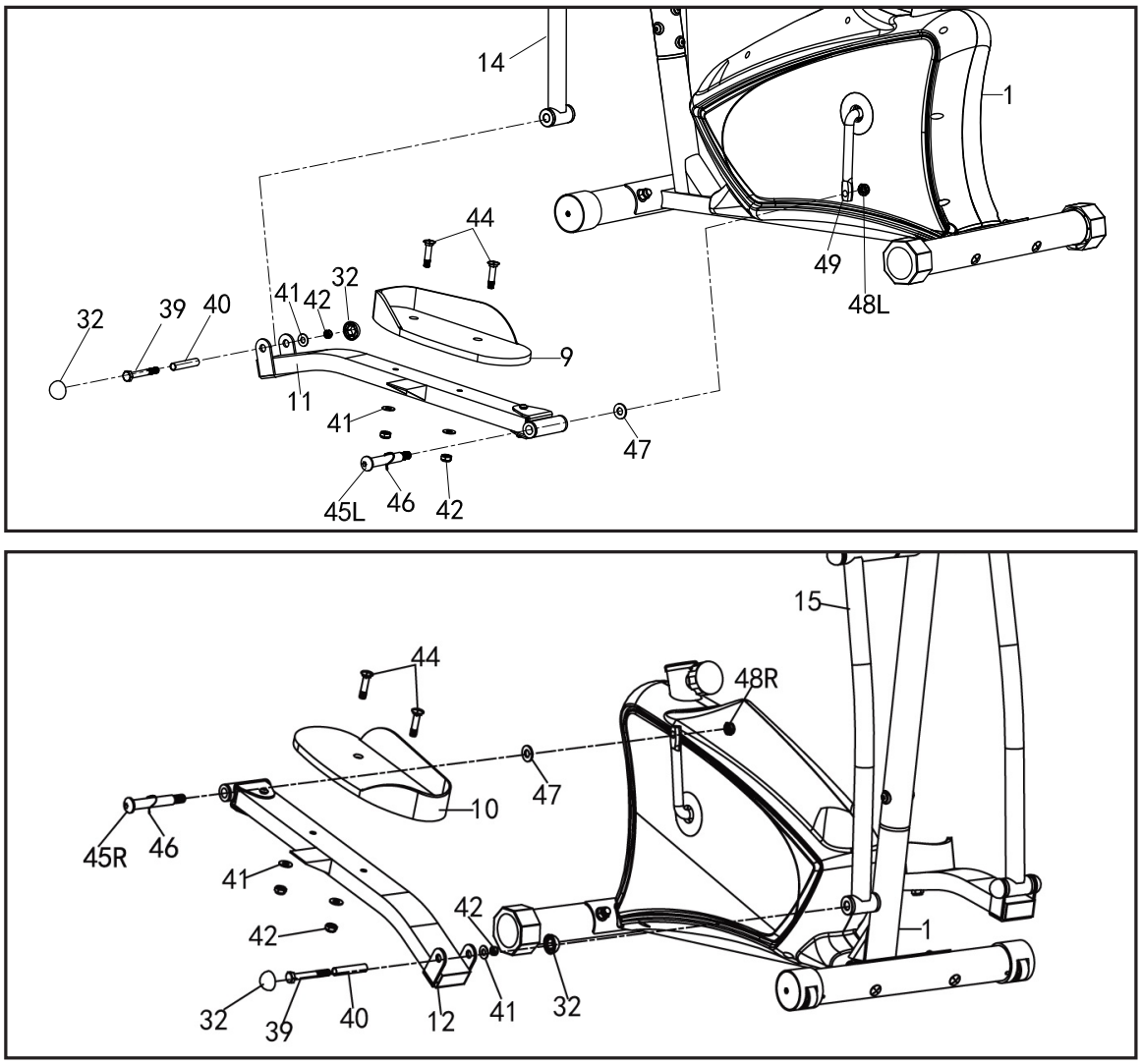

1. Attach the **Left Pedal Tube (11)** to the **Left Side of Crank (49)**. Secure using one **Left Lock Nut (48L)**, one **Washer (47)**, one **Wave Washer (46)** and one **Left Hinge Bolt (45L)**.

2. Attach the **Left Pedal Tube (11)** to the **Left Bottom Handlebar (14)**. Line up the holes and insert the **Sleeve (40)** then secure using one **Nylon Nut (42)**, one **Washer (41)** and one **Hex Head Bolt (39)**. Attach the **PVC Cap (32)** onto the both side of **Pedal Tube (11)**.

3. Attach the **Left Pedal (9)** onto the **Left Pedal Tube (11)**, secure using two **Carriage Bolts (44)**,two **Washers (41)** and two **Nylon Nuts (42)**.

4. Repeat the procedure for the **Right Pedal Tube (12)** & **Right Pedal (10)**.

Hardware Step 4

4 PVC Caps (#32)
2 Hex Head Bolts (#39)
2 Sleeves (#40)
6 Washers (#41)
6 Nylon Nuts (#42)
4 Carriage Bolts (#44)
1/1 Hinge Bolt (#45L/R)
2 Wave Washers (#46)
2 Washers (#47)
1/1 Lock Nut (#48L/R)

EU**100** Assembly Instructions

5 Handlebars and Console

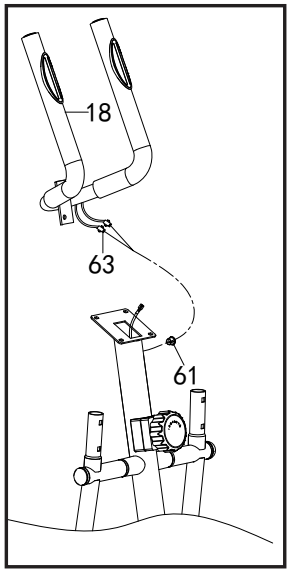

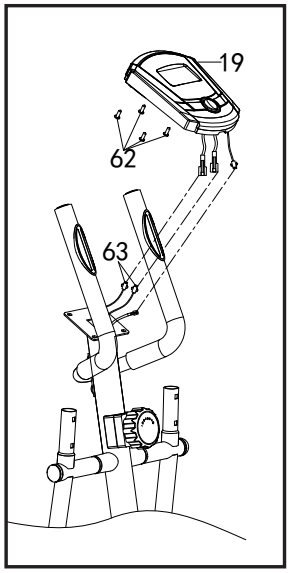

Hardware Step 5

2 Allen Screws (#30)
2 Curved Washers (#31)

Pre-assembled on Console:
4 Screws (#62)

Pre-assembled on Seat Post:
1 Carriage Bolt (#26)
1 Quadrate Plate (#27)
1 Sleeve (#28)
1 Lock Knob (#29)

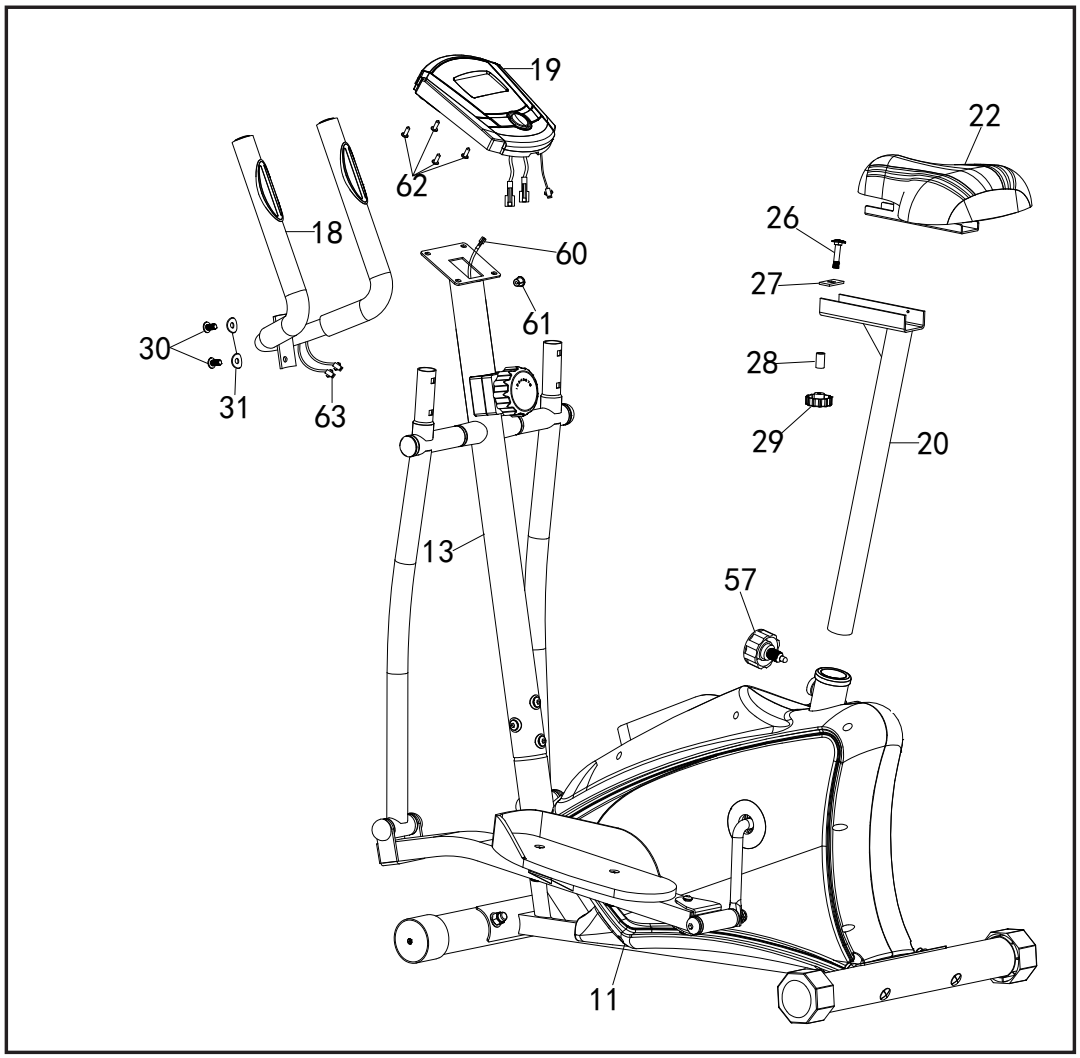

1. Attach the **Stationary Handlebar (18)** to the **Front Post (13)**. Secure using two **Allen Screws (30)** and two **Curved Washers (31)**.

2. Insert the **Hand Pulse Wires (63)** through the **Grommet (61)** on the **Front Post (13)**, and then pull it out from the top of the **Front Post (13)**. Connect the **Sensor Wire & Hand Pulse Wire (63)** with the **Computer (19)** accordingly.

3. Attach the **Computer (19)** to the **Front Post (13)** and fasten with four **Screws (62)**.

4. Attach the **Seat (22)** onto the **Seat Post (20)**, line up the holes then tighten with one **Carriage Bolt (26)**, one **Quadrate Plate (27**),one **Sleeve (28)** and the **Lock Knob (29)**.

5. Screw off the **Quick Release Knob (57)** from the **Main Frame (1)**, insert the **Seat Post (20)** to the **Main Frame (1)**. Line up the holes and secure seat in position with **Quick Release Knob (57)**. The correct height for seat can be adjusted after the upright elliptical is fully assembled.

EU**100** Assembly Instructions

6 Handlebars

Hardware Step 6

4 Allen Screws (#38)
4 Carriage Bolts (#37)

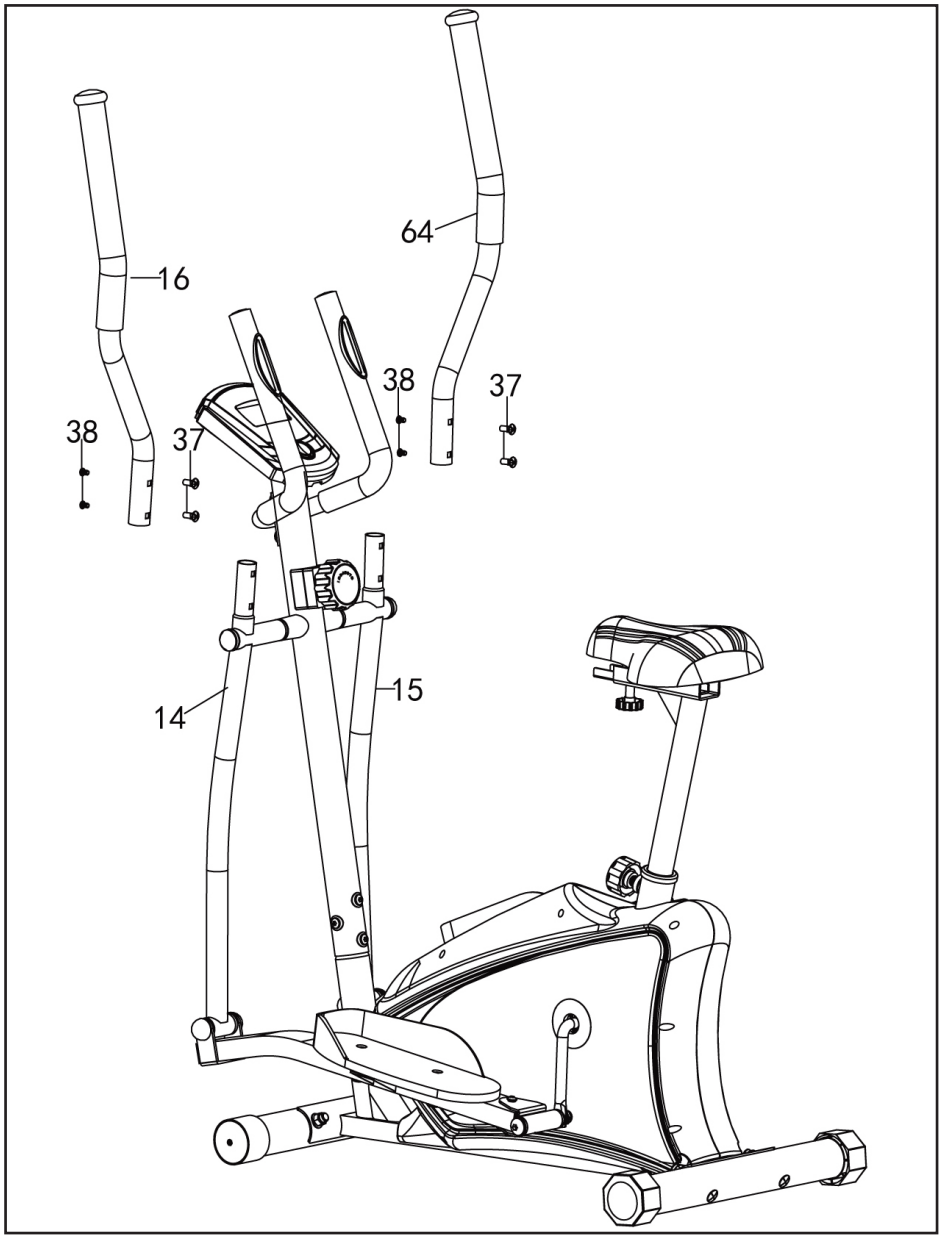

1. Connect the **Left Top Handlebar (16)** to the **Left Bottom Handlebar (14)**. Secure using two **Allen Screws (38)** and two **Carriage Bolts (37)**.

2. Repeat for the **Right Top Handlebar (64)** to the **Right Bottom Handlebar (15)**.

Operation of Your Console

EU**100** Console



Key Functions

BUTTONS:

MODE: Press to select the desired function between: Scan, Time, Count, Calories and Total Count.

SET: Press to set the values of time, count and calories

RESET: Press to reset your function value to zero.

Press and hold for 2 seconds to reset except for Odometer.

(All the values will reset to ZERO automatically when change the batteries.)

Functions

Scan: Displays each function in sequence every 6 seconds. The display loop is Time - Speed - Distance - Calories - Odometer - Pulse.

Time: Shows your elapsed workout time up to 99:00
Counts down from your preset target time to 00:00 during your workout

Speed: Displays the current speed up to 999 MILE.

Distance: Displays the cumulative distance traveled during your workout up to 999 mil
Counts down from your preset target time to 0.0 during your workout.

Calories: Displays the cumulative calories burned at any given time during your workout up to 999 cal. Counts down from your preset target calorie to 0.0 cal.

Odometer Displays the total distance accumulated up to 9999 mile.

Pulse: The monitor will display the user's current heart rate in beats per minute during the workout. Both hands must hold the gripped pulse for a heart rate reading during your workout.

Note: This is a rough guide used for comparison of different exercise sessions, which cannot be used for medical purposes.

Computer Operation

How to preset Time, Speed, Distance, Calories and Odometer.

1. Press the mode button until desired function is displayed.
2. Press the set button until your desired number is displayed.
3. Press the mode button to accept value.
4. Press mode button for few seconds until all numbers back to zero except ODO.

The computer will count down from your pre-set value once you start exercising.
The computer will beep to indicate the completion of your pre-set value. Press any button to stop the beep and the computer will now start to count up.
If more than one value is preset, the first to reach the value will sound the alarm. Once you have stopped the alarm the next preset value will sound the alarm until you have reached all preset values.

Remarks

1. Computer requires two "AA" batteries
2. The computer will turn on automatically by pressing any key or when you start pedaling.
3. The computer will turn off automatically if no signal is detected for around four minutes.
4. If computer is illegible or partial segments appear, remove batteries and wait 15 seconds to re-install.
   Removing the batteries will reset all values to zero.

Maintenance

The safety of this produce can be maintained only if regular periodic checks are made. Most checks can be performed once a week. However some checks should be made before each workout, and are indicated as such below.

Checks

• Check that pedals are tight, pedals can work loose over time.
• Check that stabilizer bolts are tight, check before each workout this.
• Check that handlebar is secure, if not, tighten, check before each workout this.
• Should a part become defective, replace it immediately. Do not allow use of the equipment until it has been repaired.

Cleaning

A damp cloth is sufficient to clean most surfaces of this unit. Be careful not to drip water on the monitor. A mild liquid soap may be added if needed.

User Direction

HOW TO ADJUST THE SEAT

The seat can be adjusted forward or backward to the position that is the most comfortable. To adjust the seat, loosen the quick release knob, slide the seat to the desired position and retighten the knob.

HOW TO MOVE THE EU100

To move the Hybrid Bike, grasp the stationary handlebar and pull back on the handle until the Hybrid Bike can be moved on the front wheels. Carefully move the Hybrid Bike to the desired location and then lower it. Before moving the machine, please make sure that the top handlebars are on same position.

HOW TO LEVEL THE EU100

The bike is equipped with adjustable end caps. If the unit is wobbly, please turn the leveling caps on the rear stabilizer to level the unit.

Manufacturer's Limited Warranty

Effective August 21, 2018 - Hybrid Elliptical Upright Bike LIMITED WARRANTY

XTERRA Fitness Inc. warrants all its home use Hybrid Elliptical Upright Bike parts for a period of time listed below, from the date of retail sale, as determined by a sales receipt or in the absence of a sales receipt, eighteen (18) months from the original factory shipping date. XTERRA Fitness's responsibilities include providing new or remanufactured parts, at XTERRA Fitness's option, and technical support to our independent dealers and servicing organizations. In the absence of a dealer or service organization, these warranties will be administered by XTERRA Fitness directly to a consumer. The warranty period applies to the following components:

Home Use Limited Warranty		
Frame	Parts	Labor
1 Years	1 Year	None

NORMAL RESPONSIBILITIES OF THE CONSUMER

This warranty applies only to products in ordinary household use. The consumer is responsible for the items listed below:

1. The warranty registration card must be completed and returned to the address listed on the card within 10 days of the original purchase to validate the manufacturer's limited warranty or register online at http://www.xterrafitness.com/warrantyreg.html.
2. Proper use of the Hybrid Elliptical Upright Bike in accordance with the instructions provided in this manual, including maintenance.
3. Proper connection to a power supply of sufficient voltage, replacement of blown fuses, repair of loose connections or defects in house/facility wiring.
4. Expenses for making the Hybrid Elliptical Upright Bike accessible for servicing, including any item that was not part of the Hybrid Elliptical Upright Bike at the time it was shipped from the factory.
5. Damages to the Hybrid Elliptical Upright Bike finish during shipping, installation or following installation.

EXCLUSIONS

This warranty does not cover the following:

1. CONSEQUENTIAL, COLLATERAL, OR INCIDENTAL DAMAGES SUCH AS PROPERTY DAMAGE AND INCIDENTAL EXPENSES RESULTING FROM ANY BREACH OF THIS WRITTEN OR ANY IMPLIED WARRANTY. Note: Some states do not allow the exclusion or limitation of incidental or consequential damages, so this limitation or exclusion may not apply to you.
2. Damages caused by services performed by persons other than authorized XTERRA Fitness service companies, use of parts other than original XTERRA Fitness parts, or external causes such as alterations, modifications, abuse, misuse, accident, improper maintenance, inadequate power supply, or acts of God.
3. Products with original serial numbers that have been removed or altered.
4. Products that have been; sold, transferred, bartered, or given to a third party.
5. Products that are used as store display models.
6. Products that do not have a warranty registration on file at XTERRA Fitness, Inc. XTERRA Fitness reserves the right to request proof of purchase if no warranty record exists for the product.
7. Product use in any environment other than a residential setting.
8. THIS WARRANTY IS EXPRESSLY IN LIEU OF ALL OTHER WARRANTIES EXPRESSED OR IMPLIED, INCLUDING THE WARRANTIES OF MERCHANTABILITY AND/OR FITNESS FOR A PARTICULAR PURPOSE.

SERVICE

Keep your bill of sale. Twelve (12) months from the date on the bill of sale or eighteen (18) months from the date of factory shipping as determined by the serial number establishes the warranty period should service be required. If service is performed, it is in your best interest to obtain and keep all receipts. This written warranty gives you specific legal rights. You may also have other rights that vary from state to state. Service under this warranty must be obtained by following these steps, in order:

1. Contact your selling authorized XTERRA Fitness dealer. OR
2. Contact your local authorized XTERRA Fitness service organization.
3. If there is a question as to where to obtain service, contact our service department at (870) 333-5500.
4. XTERRA Fitness's obligation under this warranty is limited to repairing or replacing, at XTERRA Fitness's option, the product through one of our authorized service centers. All repairs must be preauthorized by XTERRA Fitness. If the product is shipped to a service center freight charges to and from the service center will be the customer's responsibility. For replacement parts shipped while the product is under warranty, the customer will be responsible for shipping and handling charges. The owner is responsible for adequate packaging upon return to XTERRA Fitness. XTERRA Fitness is not responsible for damages in shipping. Make all freight damage claims with the appropriate freight carrier. DO NOT SHIP ANY UNIT TO OUR FACTORY WITHOUT A RETURN AUTHORIZATION NUMBER. All units arriving without a return authorization number will be refused.
5. For any further information, or to contact our service department by mail, send your correspondence to:

XTERRA Fitness, Inc.
P.O. Box 2037
Jonesboro, AR 72402-2037

Product features or specifications as described or illustrated are subject to change without notice. All warranties are made by XTERRA Fitness, Inc. This warranty applies only in the 48 contiguous United States. NOTE: This does not apply to Alaska or Hawaii.

3000 Nestle Road Jonesboro, AR 72401 - Phone:870-333-5500 - Fax:870-935-7611

©2018 All RIghts Reserved.