XTERRA FITNESS

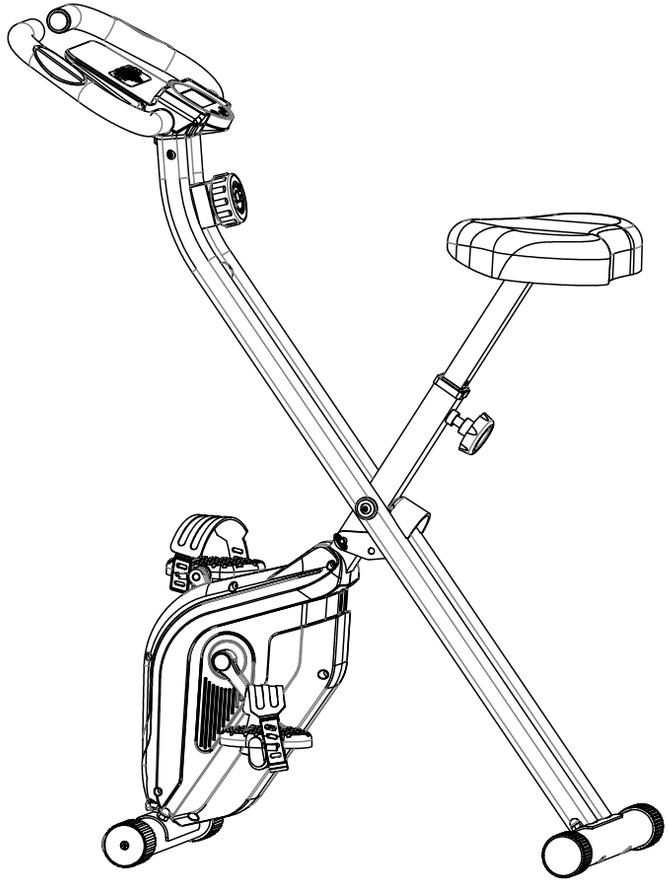

FB180

FOLDING BIKE

FB180_118425_OM_20250409

Online Support

If you require assistance or are experiencing issues with your XTERRA Machine, please contact customer care for additional help.

1-800-258-8511

questions@xterrafitness.com

Warranty Registration

Scan to quickly and easily register your new XTERRA Fitness machine.

Table of Contents

Product Registration 3
Warning / Safety Instructions
Product Label 4
Safety Instructions 5
Parts and Assembly
Parts of your Bike 7
Parts Included 8
Assembly 9
Features
Console Screen - Overview 13
Console Functions 14
Storage & Maitenance 15
Exploded View Diagram 16
Warranty 17

PRODUCT REGISTRATION

Congratulations on your new Folding Bike, and welcome to the XTERRA Fitness family!

Thank you for your purchase of this quality unit from XTERRA Fitness. Your new unit was manufactured by one of the leading fitness manufacturers in the world and is backed by one of the most comprehensive warranties available. XTERRA Fitness will do all we can to make your ownership experience as pleasant as possible for many years to come.

If you have questions, or if parts are missing or damaged, or you require customer service, call (870) 335-5500. Please have your model number and serial number handy when you call.

Please take a moment at this time to record the name of the dealer, their telephone number, and the date of purchase below to make any future, needed contact easy. We appreciate your support and we will always remember that you are the reason that we are in business.

Serial Number	
Date of Purchase	
Dealer / Place of Purchase	

WARRANTY REGISTRATION

Use your smartphone to scan the QR code above to quickly and easily register your new XTERRA Fitness machine.

You can also go to **xterrafitness.com/warranty** under the Support tab to register online.

Version: 1.0
Revision: 04.09.2025

PRODUCT LABELS

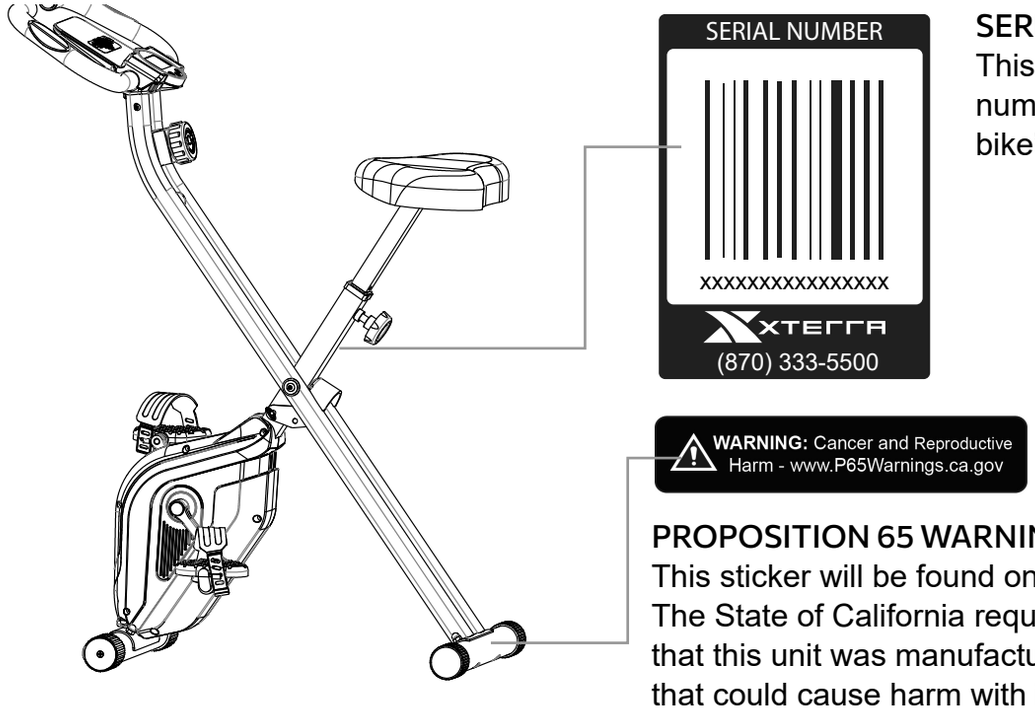

SERIAL NUMBER STICKER

This sticker will be found on the frame. Please record the number below the barcode for the purpose of registering your bike's warranty.

PROPOSITION 65 WARNING

This sticker will be found on the rear stabilizer. The State of California requires us to inform you that this unit was manufactured using chemicals that could cause harm with improper use.

SAFETY INSTRUCTIONS

Read all instructions before using this appliance.

WARNING - To reduce the risk of injury to persons:

1. Do not operate under blanket or pillow. Excessive heating can occur and cause fire, electric shock, or injury to persons.
2. This exercise equipment is not intended for use by persons with reduced physical, sensory or mental capabilities, or lack of experience and knowledge.
3. Use this appliance only for its intended use as described in this manual. Do not use attachments not recommended by the manufacturer.
4. Never operate this appliance if it is not working properly, if it has been dropped or damaged, or dropped into water. Return the appliance to a service center for examination and repair.
5. Never operate the appliance with the air openings blocked. Keep the air openings free of lint, hair, and the like.
6. Never drop or insert any object into any opening.
7. Do not use outdoors.
8. Do not operate where aerosol (spray) products are being use or where oxygen is being administered.
9. The appliance is intended for household use.
10. Do not operate equipment on deeply padded, plush or shag carpet. Damage to both carpet and equipment may result.
11. Before beginning this or any exercise program, consult a physician. This is especially important for persons over the age of 35 or persons with pre-existing health conditions.
12. Keep hands away from all moving parts.
13. The pulse sensors are not medical devices. Various factors, including the user's movement, may affect the accuracy of heart rate readings. The pulse sensors are intended only as exercise aids in determining heart rate trends in general.
14. Do not attempt to use your equipment for any purpose other than for the purpose it is intended.
15. Wear proper shoes. High heels, dress shoes, sandals or bare feet are not suitable for use on your equipment. Quality athletic shoes are recommended to avoid leg fatigue.
16. **User Weight Limit: 250 lbs.**

Please ensure that you review and adhere to the user weight restrictions and power requirements of your new machine. Failure to do so may result in serious injury or damage to your machine.

MANUFACTURER'S 90 DAYS LIMITED WARRANTY

Your XTERRA Folding Bike is warranted for 90 days from the date of purchase against defects in material when used for the purpose intended, under normal conditions and provided it receives proper care. Any part found defective or missing will be sent at no cost when returned in accordance with the terms of this warranty.

This warranty is not transferable and is extended only to the original owner.

The warranty shall not apply to exercise units which are (1) used for commercial or other income producing purposes, or (2) subject to misuse, neglect, accident or unauthorized repair and alterations.

This warranty provided herein is lieu of all other express warranties, any implied warranties, including any implied warranties of merchantability of fitness for particular purpose, are limited in duration to the first 90 days from date of purchase. All other obligations or liabilities, including liability for consequential damages are hereby excluded.

ATTENTION
This folding bike is intended for residential use only and is warranted for the application. Any other application voids this warranty in its entirety.

PARTS OF YOUR BIKE

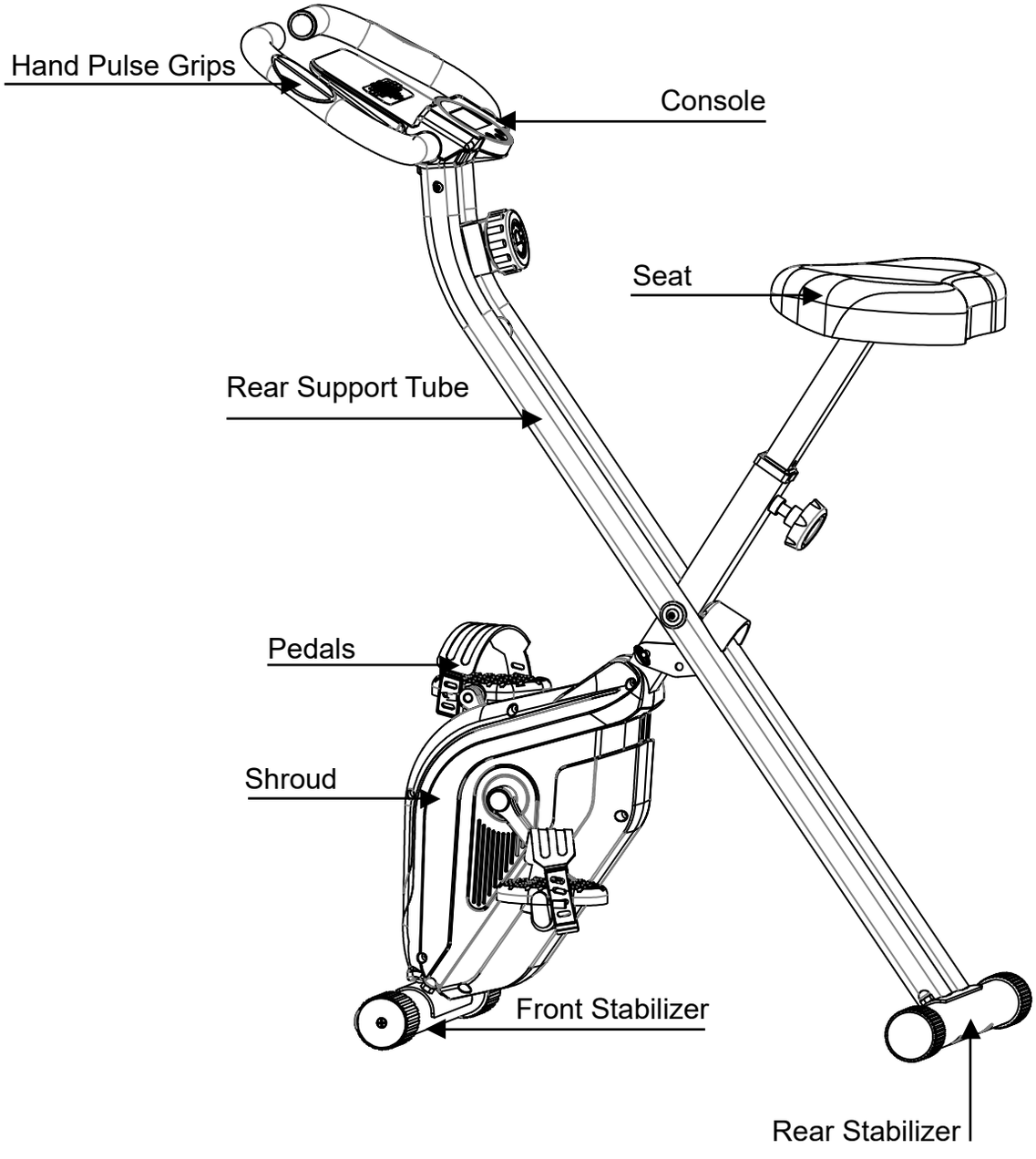

PARTS INCLUDED

PARTS INCLUDED:

- ❑ Main Frame
- ❑ Seat Support Tube
- ❑ Handlebar Tube
- ❑ Front Stabilizer
- ❑ Rear Stabilizer
- ❑ Seat
- ❑ Computer
- ❑ Pedal (L/R)
- ❑ Hardware Bag
- ❑ Manual

Note: Above parts are all needed to assemble this machine. Before you start to assemble, please check the hardware packing to make sure they are included.
Some of the parts for this machine are preassembled on the unit. Please read your manual to ensure everything is there.

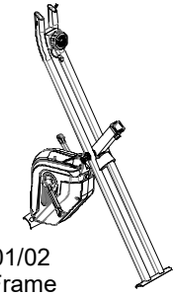 No.01/02 Main Frame (1pc)	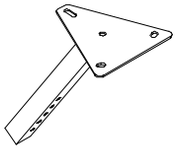 No.03 Seat Support Tube (1pc)	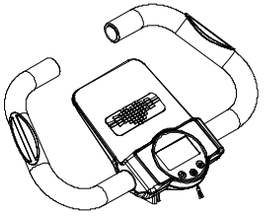 No. 04/08 Handlebar Tube/Console (1pc/1pc)
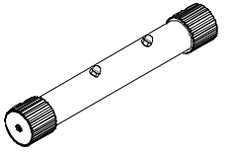 No. 05 Front Stabilizer (1pc)	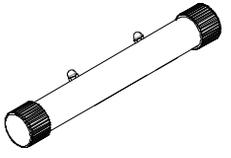 No. 06 Rear Stabilizer (1pc)	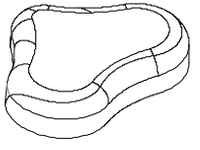 No. 07 Seat (1pc)
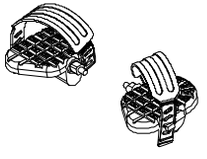 No. 09L/R Pedal (L/R) (1pc/1pc)		

ASSEMBLY

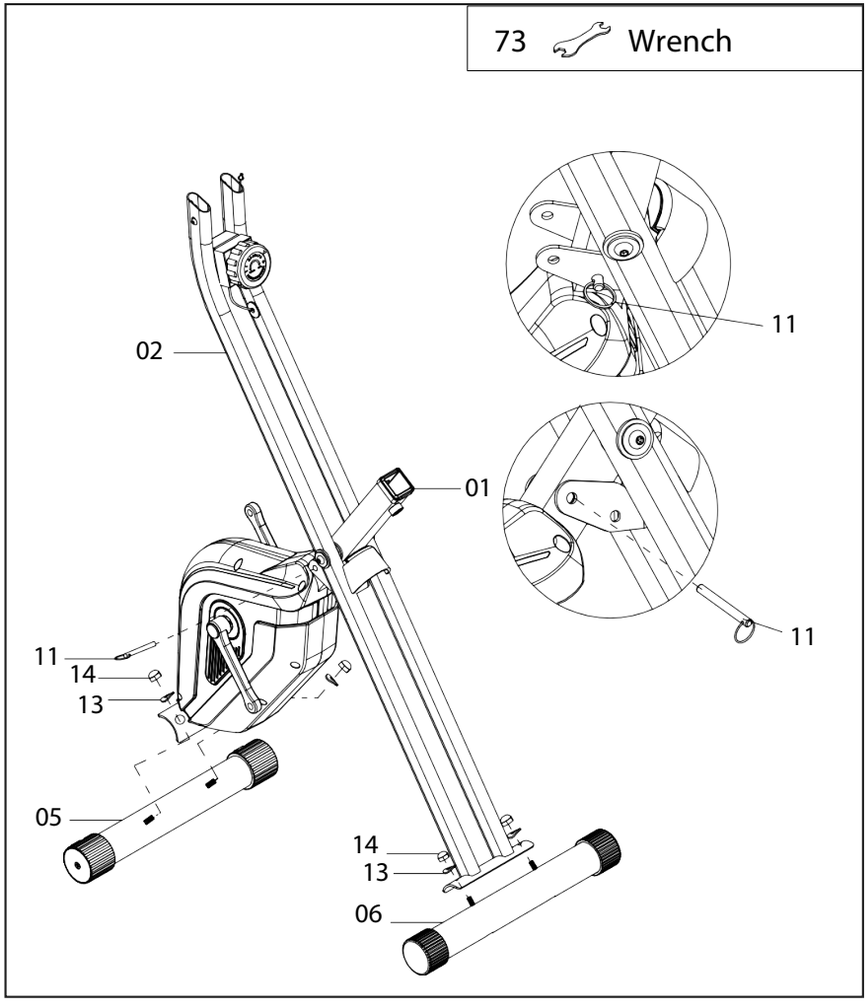

Hardware Step 1

Pre-assembled on Main Frame:

1 Lock pin (#11)

Pre-assembled on Front & Rear Stabilizer:

4 Curved washers (#13)

4 Domed nuts (#14)

1. Pull out the **Lock Pin (No. 11)** from the **Front Support Tube (No. 01)** and adjust the **Front Support Tube (No. 01)** to the open position then re-insert the **Lock Pin (No. 11)** to secure the frame position.
2. Attach the **front stabilizer tube (has wheels) (05)** to the **main frame (01)**, tighten with **2 curved washers (13)** and **2 domed nuts (14)**.
3. Repeat the procedure for **rear stabilizer tube (06)**.

ASSEMBLY - CONTINUED

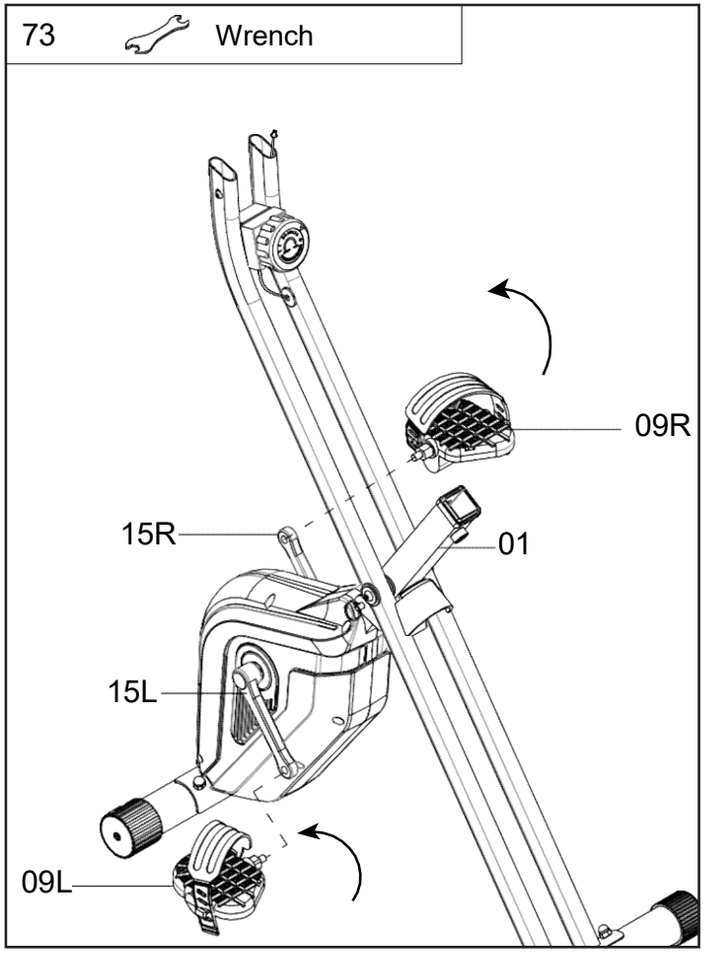

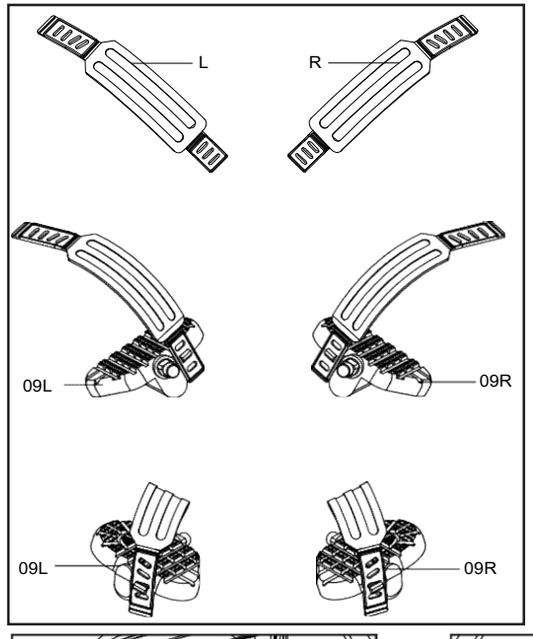

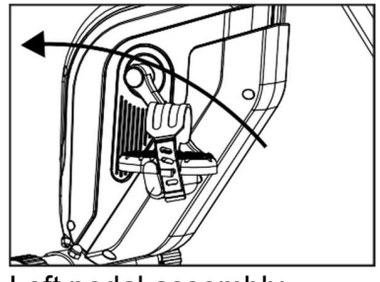

Left pedal assembly

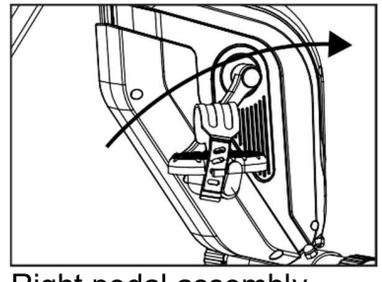

Right pedal assembly

1. Connect the **Left Pedal Strap (L)** to the **Left Pedal (No. 09L)**. Adjust the pedal strap to the length you need. Assemble the **Right Pedal Strap (R)** to the **Right Pedal (No. 09R)** in the same way.

2. Connect the **Left and Right Pedal (No. 09L & 09R)** to their appropriate **Crank (No. 15L & 15R)**. The right pedal is on the right hand side of the bike as you sit on it. The **Right Pedal (No. 09R)** should be tightened clockwise and the **Left Pedal (No. 09L)** counter-clockwise. The left pedal should turn towards the front of the machine (counterclockwise) when screwing them on.

ASSEMBLY - CONTINUED

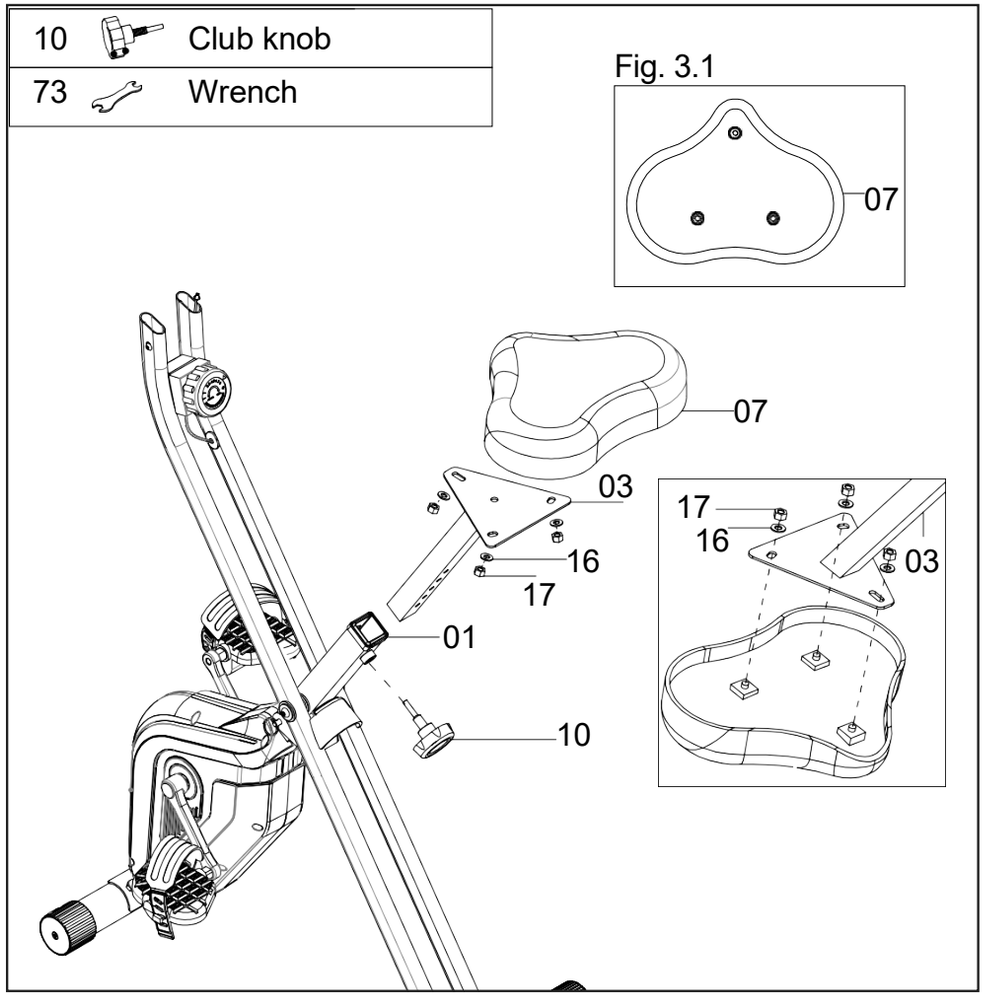

1. Remove the pre-installed **3 Flat Washers (No. 16)** and **3 Nylon Nuts (No.17)** from the back of **Seat (No. 07) (see fig. 3.1)**. Attach the **Seat (No. 07)** to the **Seat Support Tube (No. 03)**, using the pre-installed **3 Flat Washers (No.16)** and **3 Nylon Nuts (No. 17)**.
2. Insert the **Seat Support Tube (No. 03)** to the **Front Support Tube (No. 01)**, fasten with the **Club Knob (No. 10)**.

ASSEMBLY - CONTINUED

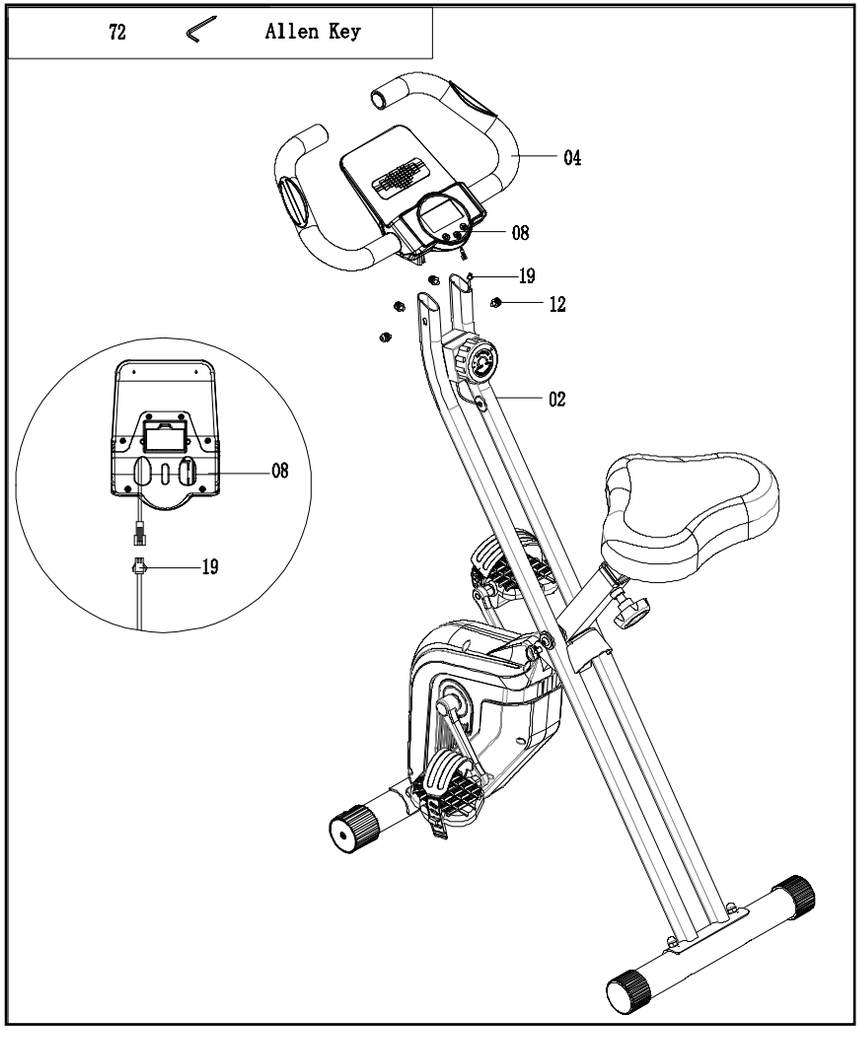

1. Remove **4 Screw Sets (No. 12)** from the **Handlebar Tube (No. 04)**.
2. Connect the **Middle Sensor Wire (No. 19)** with the **Console (No. 08).**
3. Attach the **Handlebar Tube (No. 04)** to the **Rear Support Tube (No. 02)**, and tighten with **4 Screw Sets (No. 12)**.

CONSOLE SCREEN - OVERVIEW



Functions	Auto Scan	Every 6 seconds
	Time	0:00 - 99:59
	Speed	0.0 - 99.9 KM/H (MPH)
	Distance	0.00 - 999.9 KM (Miles)
	Calories	0.0 - 999.9 CAL
	Odometer	0.0 - 9999 KM (Miles)
	Pulse	40 - 240 BPM
Battery Type		2 AAA or UM4
Operating Temperature		0c - +40c; 32F - 104F
Storage Temperature		-10c - +60c; 14F - 140F

CONSOLE FUNCTIONS

BUTTONS

MODE - Push down for selecting functions.

SET - Sets time, distance, calories.

RESET -Resets time, distance, calories

FUNCTIONS AND OPERATIONS

SCAN: Press the **MODE** key to select the **TIME** function. The left side of the monitor will flash the word **SCAN**. The monitor will display **TIME**, speed, distance, calorie, odometer and pulse every 6 seconds. If you want to return to **SCAN** again, press the **MODE** key to select the **TIME** function in **SCAN** mode.

TIME: Count the total time from exercise start to end.

SPEED: Display current speed.

DISTANCE: Count the distance from exercise start to end.

CALORIE: Count the total calories from exercise start to end.

ODOMETER: Monitor will display the total accumulated distance.

PULSE RATE: Press **MODE** button until “PULSE” appears.

Before measuring your pulse rate, please place your palms of the hands on both of the contact pads. The monitor will show your current heart rate in beats per minute (BPM) on the LCD after 6~7 seconds.

During the process of pulse measurement, because of the contact jamming, the measurement value may be higher than the actual pulse rate during the first 2~3 seconds, then will return to normal level. The measurement value can not be regarded as the basis of medical treatment.

NOTE

• If the display is faint or shows no figures, please replace the batteries.

• The monitor will automatically shut off if there is no signal received after 4 minutes.

STORAGE AND MAINTENANCE

HOW TO MOVE THE FOLDING BIKE

To move the folding bike, grasp the rear stabilizer and carefully lift it until the exercise folding bike can be rolled on the front wheels. Carefully move the folding bike to the desired location and then lower it.

Maintenance

Depending on your workout regimen, checks should be made weekly or before each workout. This will help ensure your safety, as well as help maintain the integrity and performance of the machine. Please see below for more detail:

- Check that the pedals are tightened securely as they can loosen over time.
- Check that seat nuts are secure.
- Check that stabilizer bolts are tight.
- Check that handlebar is secure.
- Tighten any parts that may have loosened over time before proceeding with your workout.

NOTE: Should any part become defective, contact XTERRA Customer Service immediately to order replacement parts or seek advice on proper service. Discontinue use until the defective part has been repaired.

Cleaning

A damp cloth is sufficient to clean most surfaces of this unit. Be careful not to drip water on the monitor. A mild liquid soap may be added if needed.

EXPLODED VIEW DIAGRAM

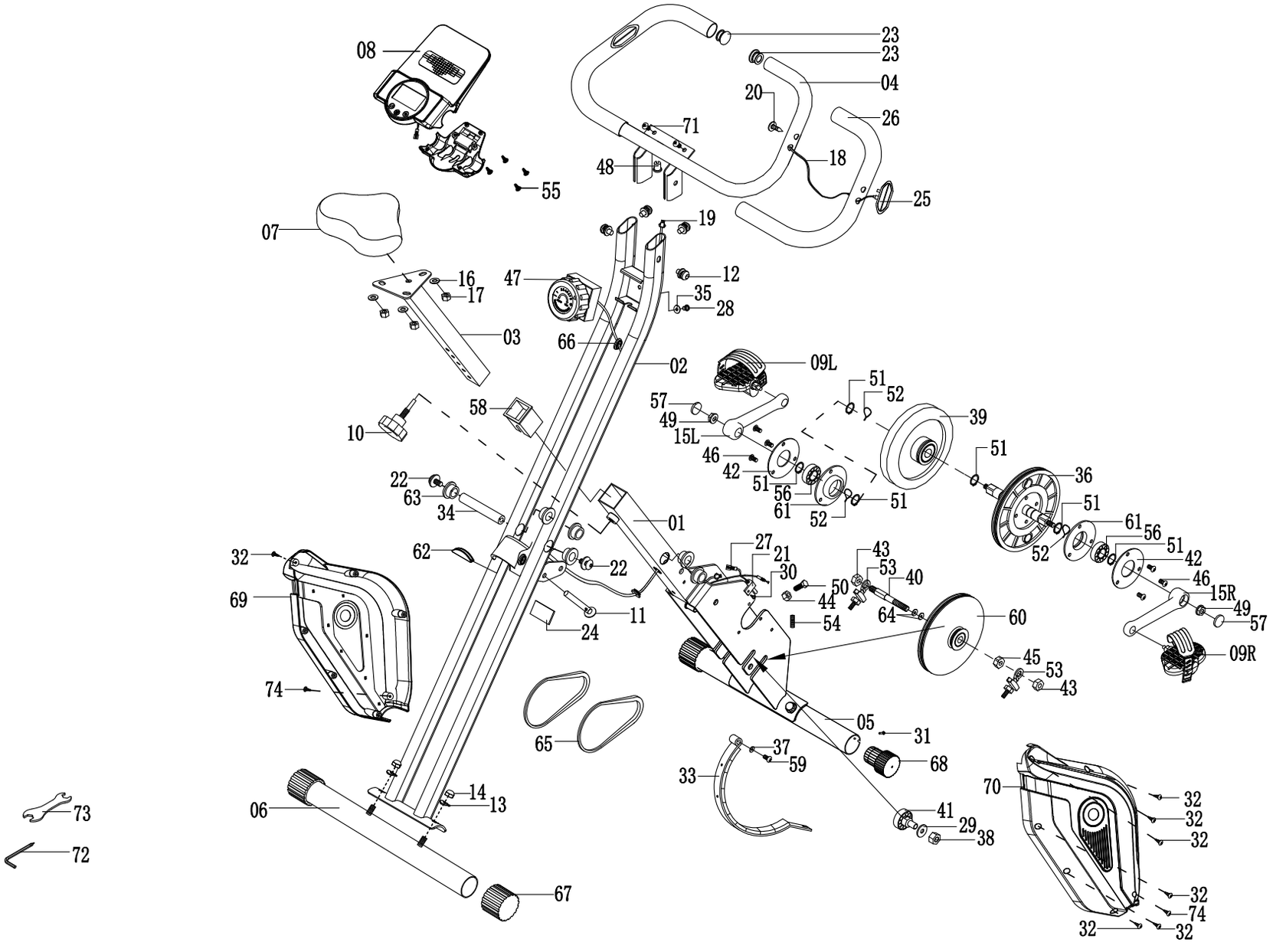

WARRANTY - RESIDENTIAL

Effective June 01, 2025- **FB180 Folding Bike LIMITED WARRANTY**

XTERRA Fitness Inc. warrants all its home use Folding Bike parts for a period of time listed below, from the date of retail sale, as determined by a sales receipt or in the absence of a sales receipt, eighteen (18) months from the original factory shipping date. XTERRA Fitness's responsibilities include providing new or remanufactured parts, at XTERRA Fitness's option, and technical support to our independent dealers and servicing organizations. In the absence of a dealer or service organization, these warranties will be administered by XTERRA Fitness directly to a consumer. The warranty period applies to the following components:

Home Use Limited Warranty

Warranty	Frame	Parts	Labor
Residential	1 Year	90 Days	None

RESPONSIBILITIES OF THE CONSUMER

This warranty applies only to products in ordinary household use, and the consumer/facility is responsible for the items listed below:

1. Proper use of the Folding Bike in accordance with the instructions provided in this manual
2. Proper installation in accordance with instructions provided with the Folding Bike and with all local electric codes.
3. Expenses for making the Folding Bike accessible for servicing, including any item that was not part of the Folding Bike at the time it was shipped from the factory.
4. Damages to the Folding Bike finish during shipping, installation or following installation.
5. Routine maintenance of this unit as specified in this manual.

WARRANTY - CONTINUED

What is not covered?

EXCLUSIONS

This warranty does not cover the following:

1. CONSEQUENTIAL, COLLATERAL, OR INCIDENTAL DAMAGES SUCH AS PROPERTY DAMAGE AND INCIDENTAL EXPENSES RESULTING FROM ANY BREACH OF THIS WRITTEN OR ANY IMPLIED WARRANTY.
   Note: Some states do not allow the exclusion or limitation of incidental or consequential damages, so this limitation or exclusion may not apply to you.
2. Service call reimbursement to the consumer. Service call reimbursement to the dealer that does not involve malfunction or defects in workmanship or material, for units that are beyond the warranty period, for units that are beyond the service call reimbursement period, for Folding Bike not requiring component replacement, or Folding Bike not in ordinary household or light commercial use.
3. Damages caused by services performed by persons other than authorized XTERRA Fitness service companies; use of parts other than original XTERRA Fitness parts; or external causes such as corrosion, discoloration of paint or plastic, alterations, modifications, abuse, misuse, accident, improper maintenance, inadequate power supply, or acts of God.
4. Products with original serial numbers that have been removed or altered.
5. Products that have been: sold, transferred, bartered, or given to a third party.
6. XTERRA Fitness reserves the right to request proof of purchase if no warranty record exists for the product.
7. THIS WARRANTY IS EXPRESSLY IN LIEU OF ALL OTHER WARRANTIES EXPRESSED OR IMPLIED, INCLUDING THE WARRANTIES OF MERCHANTABILITY AND/OR FITNESS FOR A PARTICULAR PURPOSE.
8. Product use in any environment other than a residential setting.
9. Warranties outside of the United States may vary. Please contact your local dealer for details.

Product features or specifications as described or illustrated are subject to change without notice. All warranties are made by XTERRA Fitness, Inc. This warranty applies only in the 48 contiguous United States. NOTE: This does not include Alaska or Hawaii.

3000 Nestle Road Jonesboro, AR 72401 | Phone: 800-258-8511 | Fax: 870-935-7611

©2025 All Rights Reserved. FB180 Owner's Manual