XTERRA® FITNESS

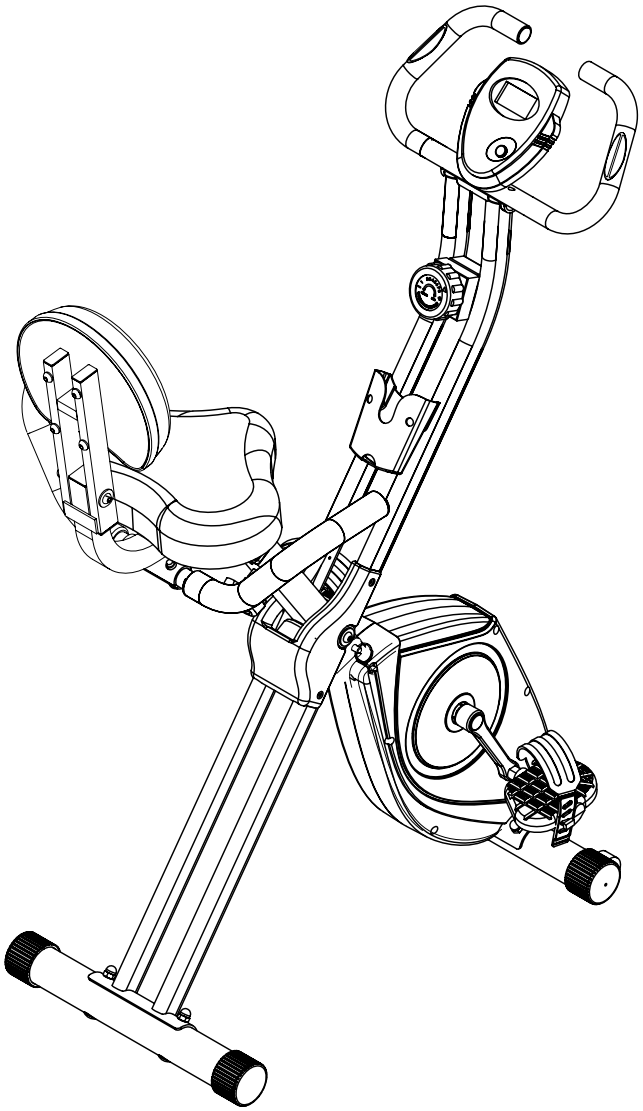

FB350 Folding Bike
OWNER'S MANUAL

PLEASE CAREFULLY READ THIS ENTIRE MANUAL BEFORE OPERATING YOUR NEW FOLDING BIKE

Congratulations On Your New Folding Bike and Welcome to the XTERRA Fitness Family!

Thank you for your purchase of this quality Folding Bike from **XTERRA Fitness**. Your new Folding Bike has been manufactured by one of the leading fitness manufacturers in the world. **XTERRA Fitness** will do all we can to make your ownership experience as pleasant as possible for many years to come. If you have questions, or if parts are missing or damaged, or you require customer service, call (870) 333-5500. Please have your model number and serial number handy when you call.

Please take a moment to record where you purchased your machine, as well as the date of purchase for future reference. We appreciate your confidence in **XTERRA Fitness** and we will always remember that you are the reason that we are in business. Please complete and mail your registration card today and enjoy your new Folding Bike.

Yours in Health,
XTERRA Fitness

Table Of Contents

Product Registration	**1**
Important Safety Instructions	**2**
FB350 Assembly Instructions	**4**
Operation of Your Console	**11**
Manufacturer's Limited Warranty	**13**

Product Registration

Purchase Location _____

Purchase Date _____

Record Your Serial Number
Please record the Serial Number of this fitness product
in the space provided below.

Serial Number _____

Register Your Purchase
The self-addressed product registration card must be completed in full and returned to **XTERRA Fitness**. You can also go to ***www.xterrafitness.com/warranty*** to register online.

Manufacture's One-Year Limited Warranty

Your Xterra Folding Bike is warranted for one year from the date of purchase against defects in material when used for the purpose intended, under normal conditions and provided it receives proper care. Any part found defective or missing will be sent at no cost when returned in accordance with the terms of this warranty.

This warranty is not transferable and is extended only to the original owner.

The warranty shall not apply to exercise units which are (1) used for commercial or other income producing purposes, or (2) subject to misuse, neglect, accident or unauthorized repair and alterations.

This warranty provided herein is lieu of all other express warranties, any implied warranties, including any implied warranties of merchantability of fitness for particular purpose, are limited in duration to the first 12 months from date of purchase. All other obligations or liabilities, including liability for consequential damages are hereby excluded.

ATTENTION

THIS FOLDING BIKE IS INTENDED FOR **RESIDENTIAL USE ONLY** AND IS WARRANTED FOR THE APPLICATION. ANY OTHER APPLICATION **VOIDS** THIS WARRANTY IN ITS ENTIRETY.

Important Safety Instructions

When using an electrical appliance, basic precautions should always be followed, including the following:

Read all instructions before using this appliance.

WARNING - To reduce the risk of burns, fire electric shock, or injury to persons:

1. Do not operate under blanket or pillow. Excessive heating can occur and cause fire, electric shock, or injury to persons.
2. This exercise equipment is not intended for use by persons with reduced physical, sensory or mental capabilities, or lack of experience and knowledge.
3. Use this appliance only for its intended use as described in this manual. Do not use attachments not recommended by the manufacturer.
4. Never operate the appliance with the air openings blocked. Keep the air openings free of lint, hair, and the like.
5. Never drop or insert any object into any opening.
6. Do not use outdoors.
7. Do not operate where aerosol (spray) products are being use or where oxygen is being administered.
8. The appliance is intended for household use.



WARNING: This product can expose you to chemicals including Toluene and Acrylamide which are known to the State of California to cause cancer and birth defects or other reproductive harm.
For more information go to www.P65Warnings.ca.gov

Fitness Equipment Safety Instructions

- Do not operate equipment on deeply padded, plush or shag carpet. Damage to both carpet and equipment may result.
- Before beginning this or any exercise program, consult a physician. This is especially important for persons over the age of 35 or persons with pre-existing health conditions.
- Keep hands away from all moving parts.
- The pulse sensors are not medical devices. Various factors, including the user's movement, may affect the accuracy of heart rate readings. The pulse sensors are intended only as exercise aids in determining heart rate trends in general.
- Do not attempt to use your equipment for any purpose other than for the purpose it is intended.
- Wear proper shoes. High heels, dress shoes, sandals or bare feet are not suitable for use on your equipment. Quality athletic shoes are recommended to avoid leg fatigue.
- Weight Limit: 225 LBS.

Failure to follow all guidelines may compromise the effectiveness of the exercise experience, expose yourself (and possibly others) to injury, and reduce the longevity of the equipment.

SAVE THESE INSTRUCTIONS - THINK SAFETY!

CAUTION!! Please be careful when unpacking the carton.

Before you begin

Thank you for selecting our revolutionary XTERRA FB350 Fitness Folding Bike. A Folding Bike is an effective exercise for increasing cardiovascular fitness, building endurance, and toning the body. Our fitness Folding Bike provides an impressive selection of features designed to make your workouts at home more effective and enjoyable.

For your benefit, read this manual carefully before you use the FB350 Fitness Folding Bike. To help us assist you, note the product model number and serial number before contacting us. Before reading further, please familiarize yourself with the parts that are labeled in the drawing below.

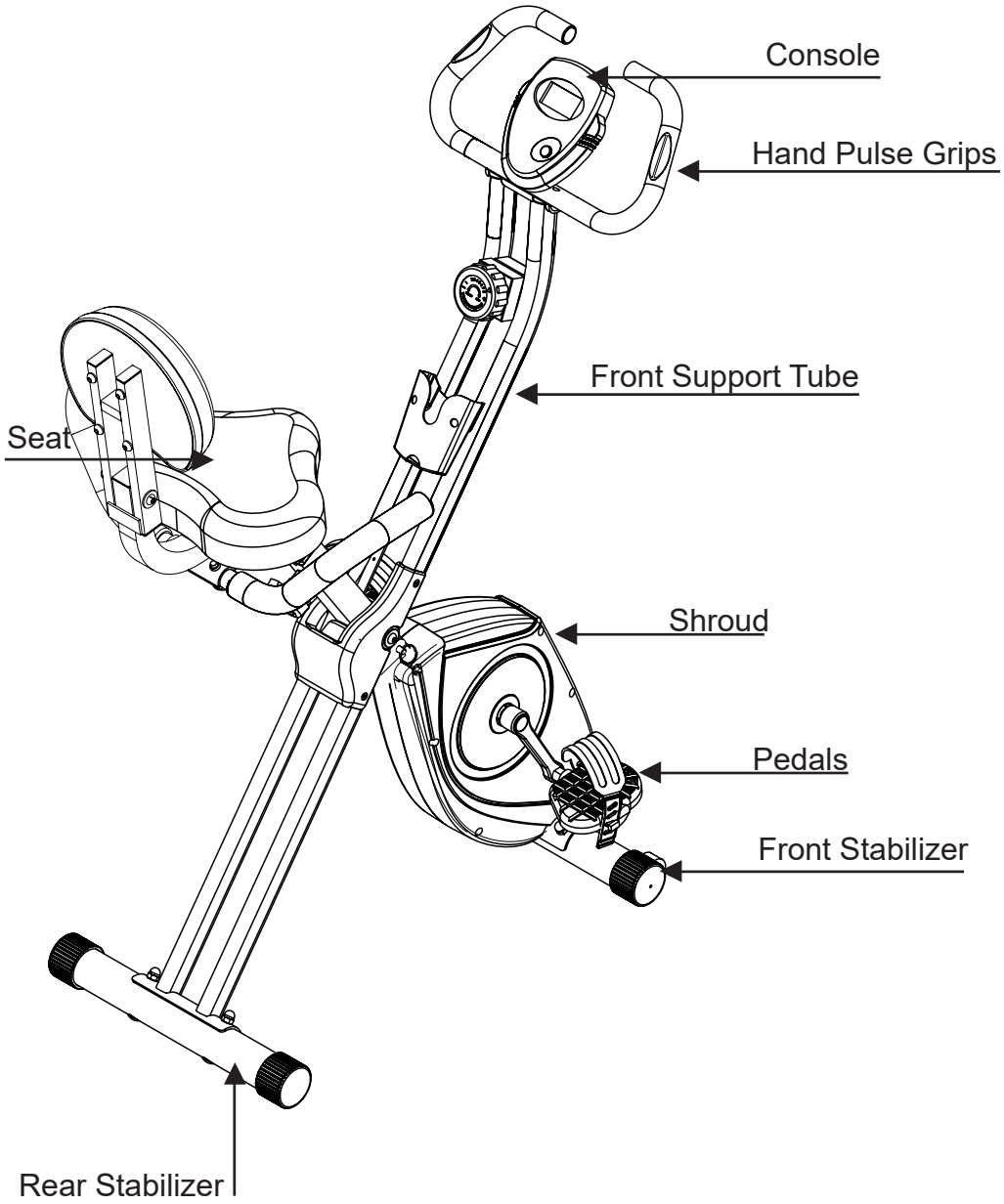

FB350 Assembly Pack Checklist

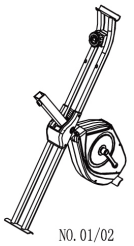
NO. 01/02


NO. 03

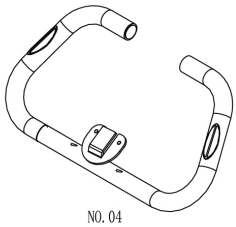
NO. 04

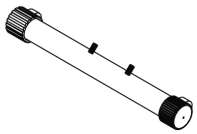
NO. 05

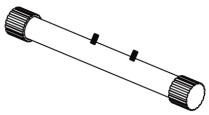
NO. 06


NO. 07


NO. 08

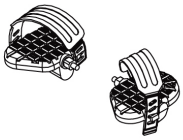
NO. 09L/R

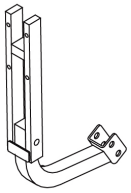
NO. 74/75

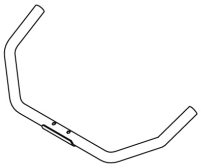
NO. 76

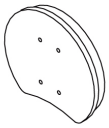
NO. 77


NO. 89

Part No.	Description	Q'TY
1/2	Main Frame	1
3	Seat Post	1
4	Front Handlebar Set	1
5	Front Stabilizer	1
6	Rear Stabilizer	1
7	Seat	1
8	Computer	1
9	Pedal (L/R)	1
74/75	Back Cushion Support Tube Set	1
76	Rear Handlebar	1
77	Back Cushion	1
89	Remote Control Holder	1
	Hardware Bag	
	Manual	

FB350 Assembly Part Checklist

Part No	Description	Q'ty
10	Club Knob	1
17	Nylon Nut M8	2
13	Curved Washer φ8.3xφ22	2
78	Carriage Bolt M8x50L	2
81	Allen Screw M8x40L	2
55	Flat Washer φ8.3xφ25	2
84	Spring Washer	4
80	Allen Screw M8x45L	4
72	Allen Key	1
73	Hex Head Wrench	1

Note: Above parts are all needed to assemble this machine. Before you start to assemble, please check your unit to make sure they are included. The parts for this machine are preassembled on the unit.

FB350 Assembly Instructions

1 Front Stabilizer and Rear Stabilizer

Hardware Step 1

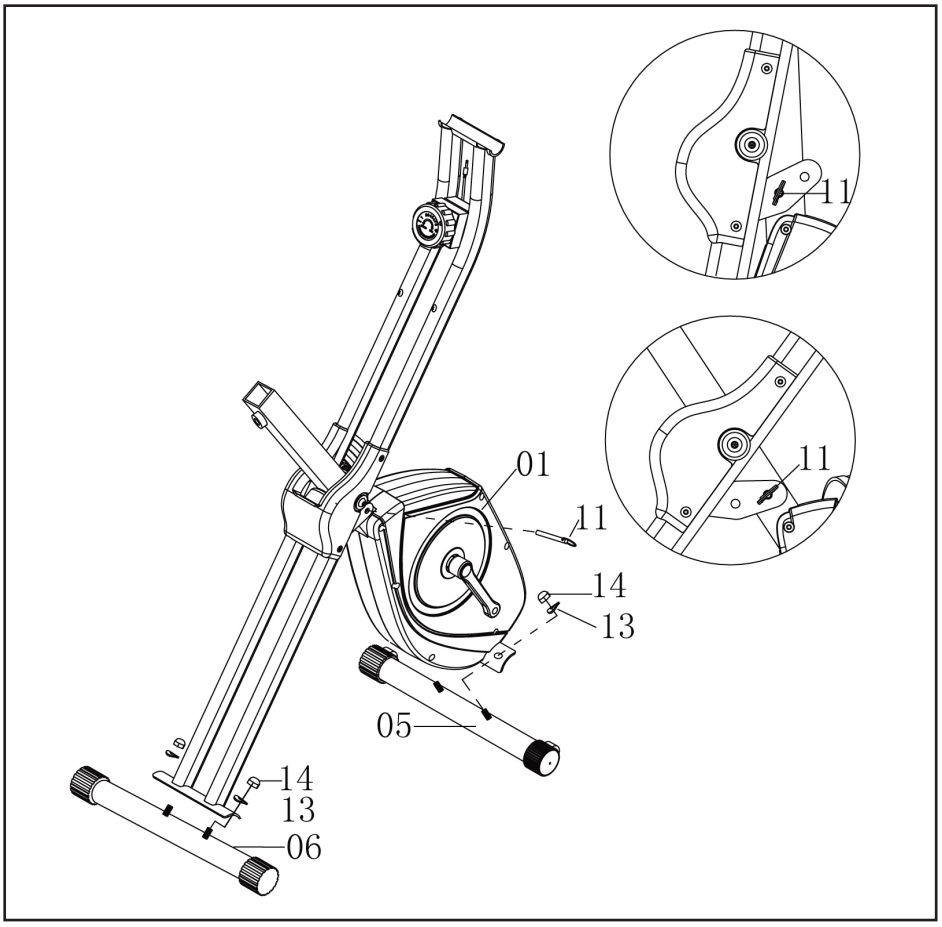

Pre-assembled on Main Frame:
1 Lock pin (#11)

Pre-assembled on Front & Rear Stabilizer:
4 Curved washers (#13)
4 Domed nuts (#14)

1. Pull out the lock pin (11) from the main frame (01) and adjust main frame (01) to the correct position then insert lock pin (11) to tighten the main frame (01).

2. Attach the front stabilizer tube (has wheels) (05) to the main frame(01), tighten with 2 curved washers (13) and 2 domed nuts (14).

3. Repeat the procedure for rear stabilizer tube (06).

2 Pedals

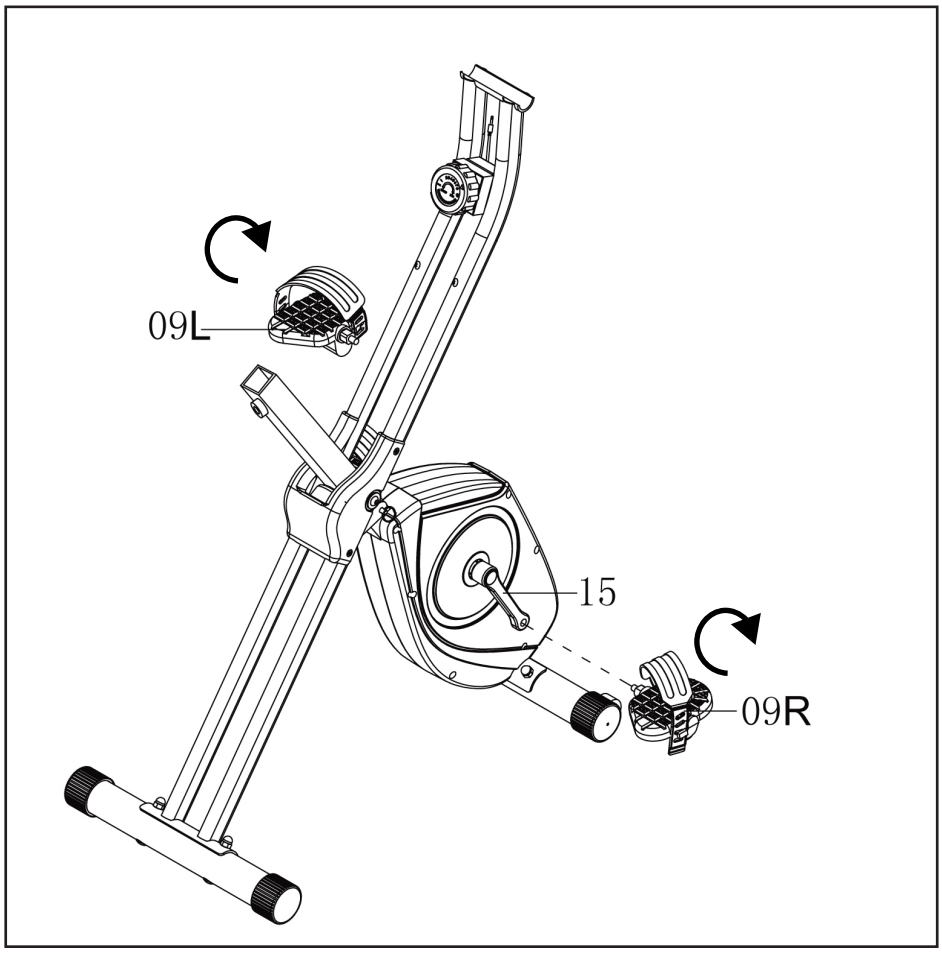

1. Connect the left and right pedal (09L) &(09R) to their appropriate crank arm (15). The right pedal is on the right hand side of the cycle as you sit on it.

2. The left pedal should turn towards the front of the machine (counterclockwise) when screwing them on.

3. Note that the right pedal (09R) should be threaded on clockwise and the left pedal (09L) on counter-clockwise.

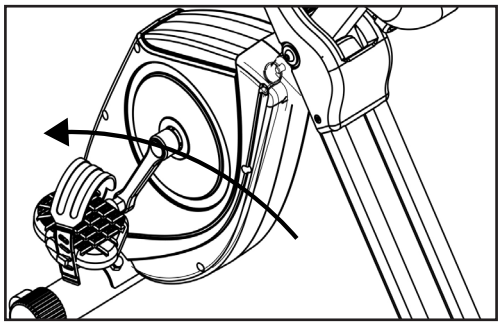
Left pedal assembly

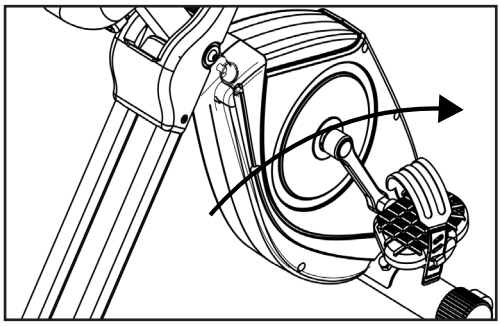
Right pedal assembly

3 Seat

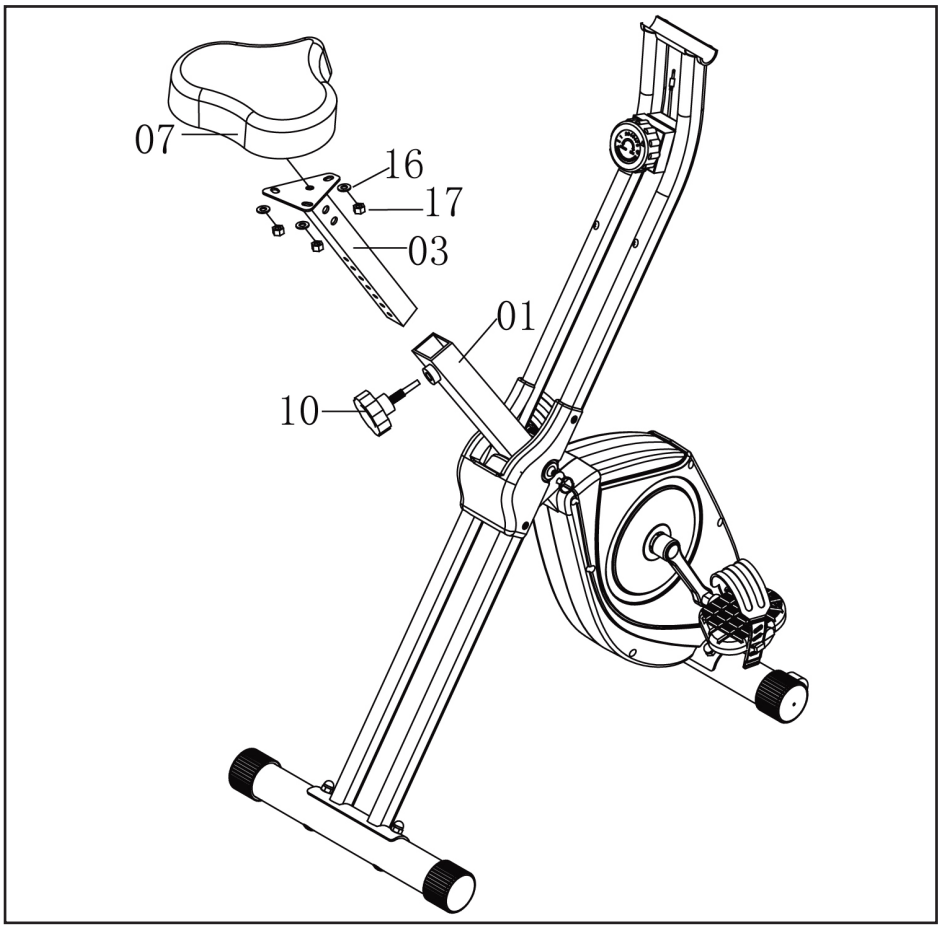

Hardware Step 3

1 Club Knob (#10)

Pre-assembled on seat:
3 Flat Washers (#16)
3 Nylon Nuts (#17)

1. Screw off 3 flat washers (16) and 3 nylon nuts (17) the back of seat (07).Attach the seat (07) to the seat post tube (03), tighten with 3 flat washers (16) and 3 nylon nuts (17).

2. Insert the seat support tube (03) to the main frame (01), fasten with a club knob (10).

4 Back Cushion & Rear Handlebar

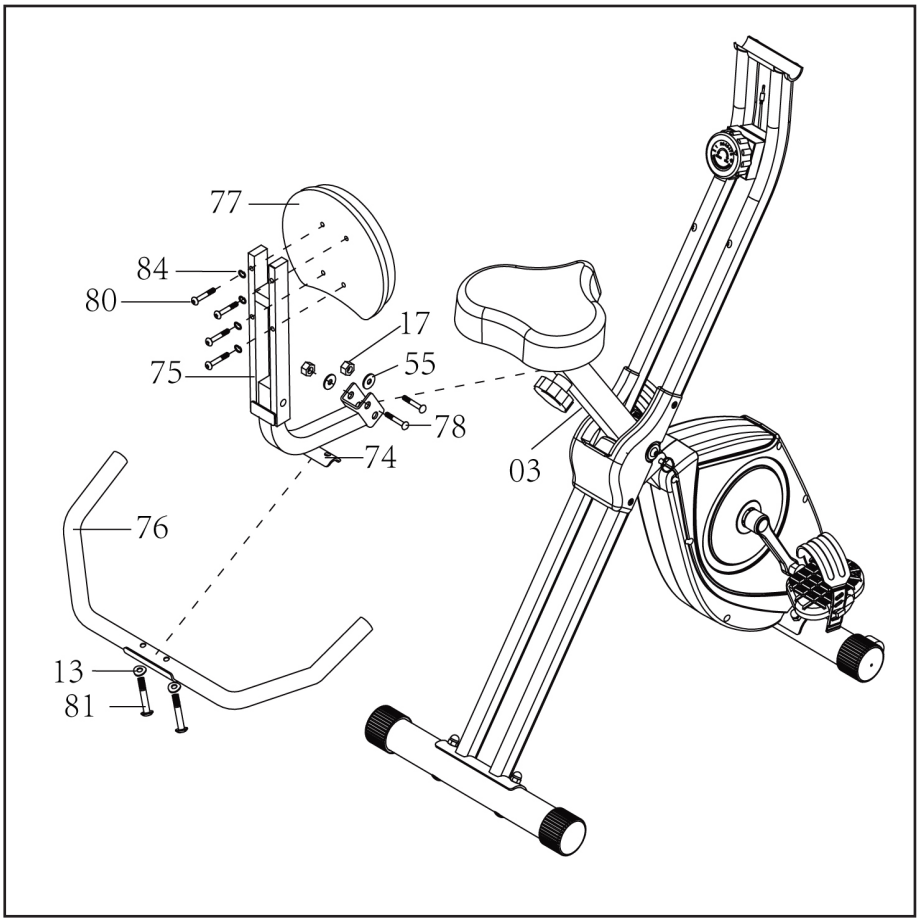

Hardware Step 4

- 2 Nylon Nuts (#17)
- 2 Carriage Bolts (#78)
- 2 Flat Washers (#55)
- 4 Spring Washers (#84)
- 4 Allen Screws (#80)
- 2 Curved Washers (#13)
- 2 Allen Screws (#81)

1. Attach the back cushion support tube (75) to the seat post (03), tighten using 2 nylon nuts (17), 2 flat washers (55) and 2 carriage bolts (78).

2. Attach the back cushion (77) onto the back cushion support tube (75), tighten using 4 spring washers (84) and 4 allen screws (80).

3. Attach the rear handlebar (76) to the back cushion adjustment set (74), tighten using 2 curved washers (13) and 2 allen screws (81).

5 Handlebar

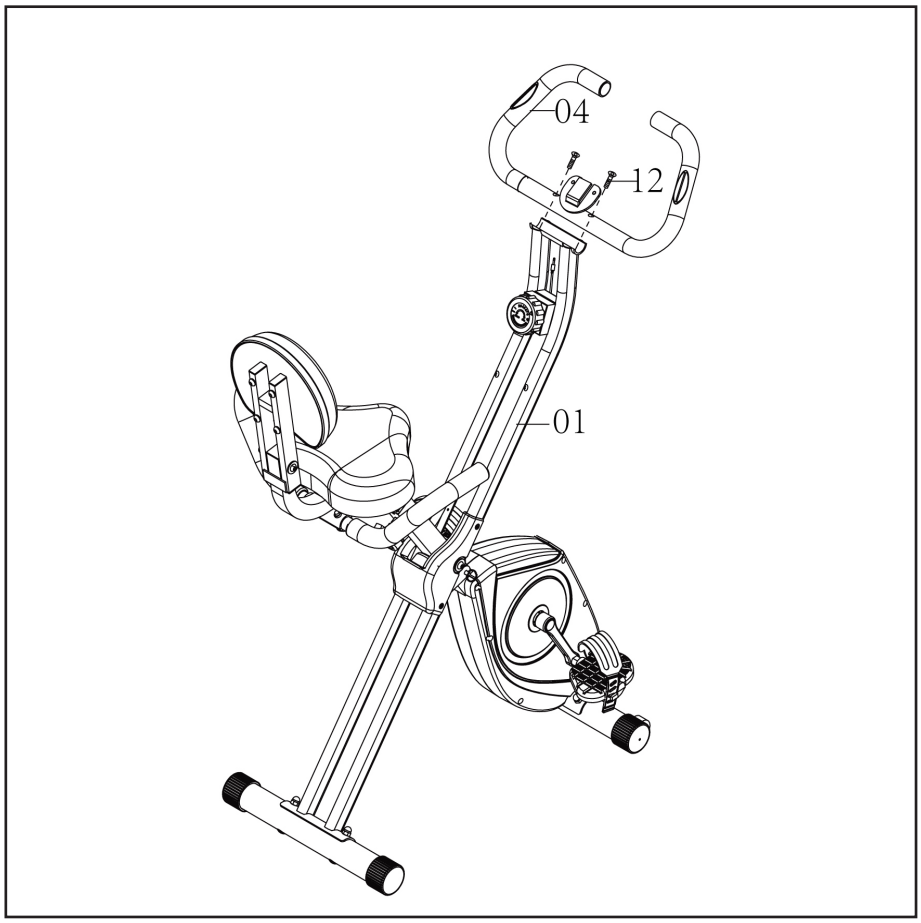

Hardware Step 5

Pre-assembled on Main Frame:
2 Allen Screws (#12)

1. Screw off 2 allen screws (12) from main frame (01). Attach handlebar (04) onto the main frame (01), tighten using 2 allen screws (12).

6 Console

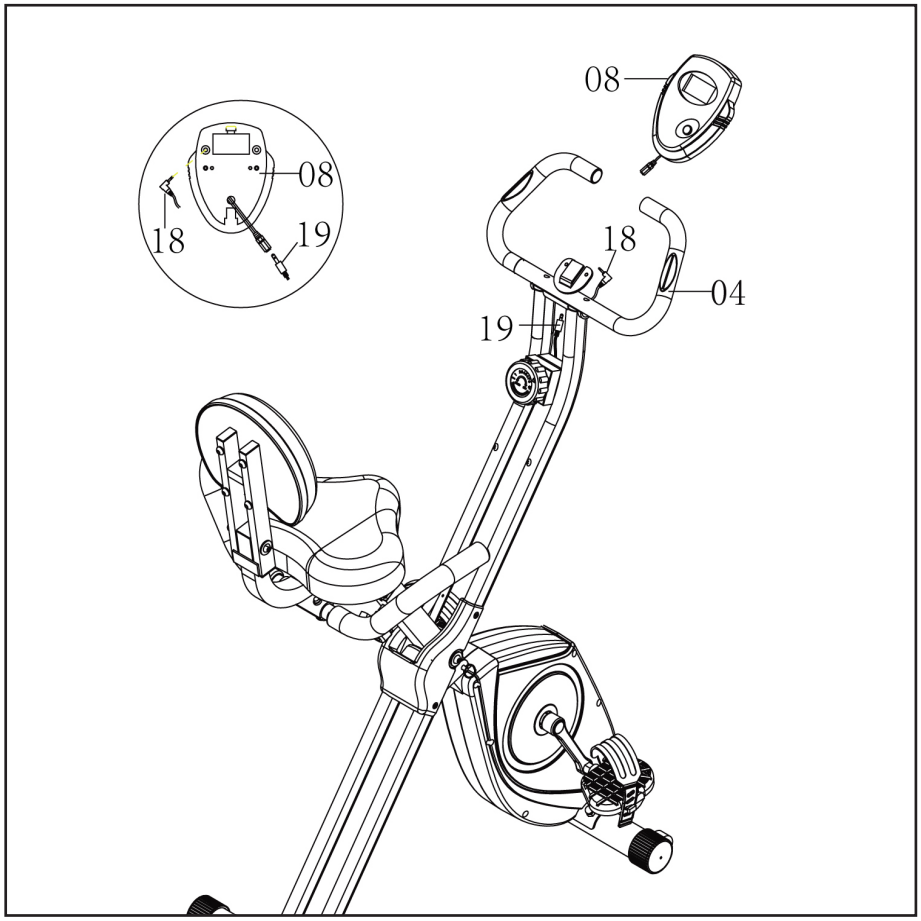

1. Insert the computer (08) to the handlebar (04), connect the upper sensor wire (19) with the computer (08).

2. Plug the hand pulse wire (18) into the hole on the back of the computer (08).

7 Remote-Control Holder

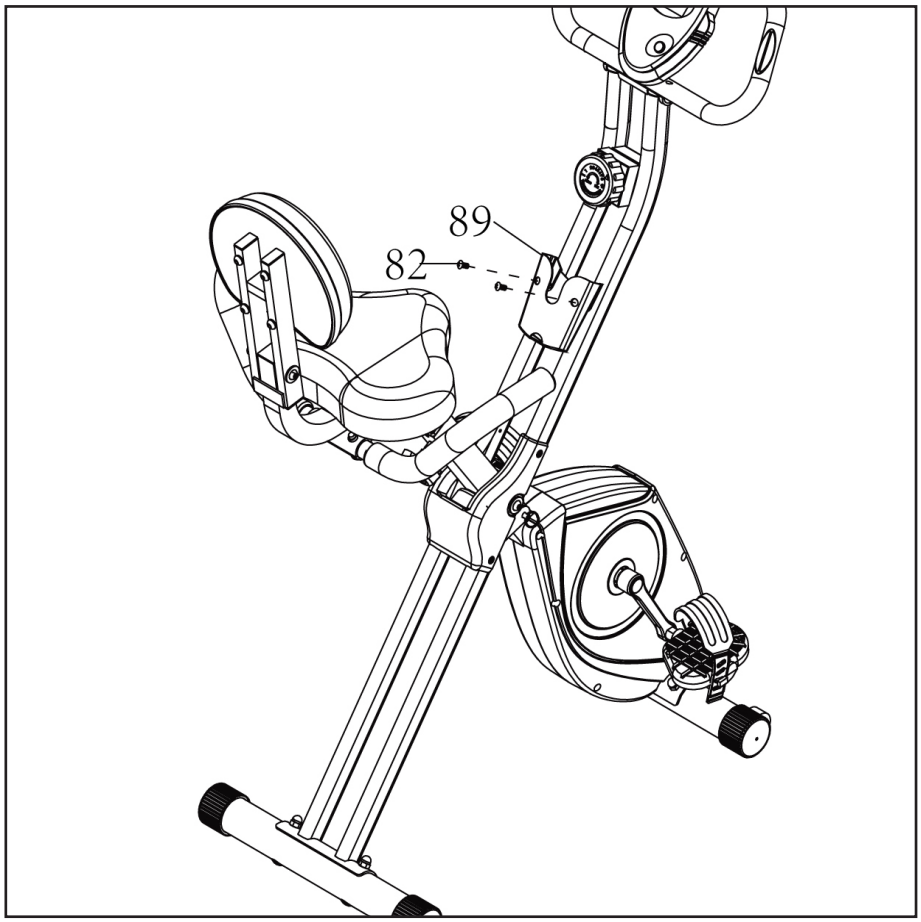

Hardware Step 7

Pre-assembled on Main Frame:
2 Allen Screws (#82)

1. Remove 2 screws (82) from the main frame, attach remote-control holder (89) onto the main frame, and tighten using 2 screws (82).

Operation of Your Console

FB350 Console



Key Functions

FUNCTIONAL BUTTON:

MODE – Press to show different Functions.

– Hold down for 6 seconds to reset all data.

FUNCTIONS AND OPERATIONS

1. **SCAN**: Press MODE button until "▼" appears at SCAN position, monitor will rotate through the following functions: speed, distance, time, calorie, ODO, and pulse, each display will be hold 4 seconds.

2. **TIME**: Shows your elapsed workout time up to 99:59.

3. **SPEED**: Display current speed. The maximum value is 999.9 M/H

4. **DISTANCE**: Count the distance from exercise start to end. The maximum value is 99.99 MILE.

5. **CALORIE**: Count the total calories from exercise start to end. The maximum value is 999.9.

6. **ODOMETER**: Monitor will display the total accumulated distance. The maximum value is 999.9 MILE.

7. **PULSE RATE:** Press MODE button until "▼" appears at PULSE position.

Before measuring your pulse rate, please place your palms of your hands on both of your contact pads and the monitor will show your current heart beat rate in beats per minute(BPM) on the LCD after 6~7 seconds.

Remark: During the process of pulse measurement, because of the contact jamming, the measurement value may be higher than the virtual pulse rate during the first 2~3 seconds, then will return to normal level. The measurement value cannot be regarded as the basis of medical treatment.

NOTE

1. If the display is faint or shows no figures, please replace the batteries.
2. The monitor will automatically shut off if there is no signal received after 4 minutes.
3. The monitor will be auto-powered on when starting to exercise push button w/signal in.
4. The monitor will automatically start calculating when you start to exercise and will stop calculating when you stop exercising for 4 seconds

USER DIRECTION

HOW TO MOVE THE FOLDING BIKE

To move the Folding Bike, grasp the rear stabilizer and carefully lift it until the exercise Folding Bike can be moved on the front wheels. Carefully move the Folding Bike to the desired location and then lower it.

Maintenance

The safety of this produce can be maintained only if regular periodic checks are made. Most checks can be performed once a week. However some checks should be made before each workout, and are indicated as such below.

Checks

- Check that seat nuts are secure, check before each workout.
- Check that pedals are tight, pedals can work loose over time.
- Check that stabilizer bolts are tight, check before each workout this.
- Check that handlebar is secure, if not, tighten, check before each workout this.
- Should a part become defective, replace it immediately. Do not allow use of the equipment until it has been repaired.

Cleaning

A damp cloth is sufficient to clean most surfaces of this unit. Be careful not to drip water on the monitor. A mild liquid soap may be added if needed.

Manufacturer's Limited Warranty

Effective August 27, 2021 - Folding Bike LIMITED WARRANTY

XTERRA Fitness Inc. warrants all its home use Folding Bike parts for a period of time listed below, from the date of retail sale, as determined by a sales receipt or in the absence of a sales receipt, eighteen (18) months from the original factory shipping date. XTERRA Fitness' responsibilities include providing new or remanufactured parts, at XTERRA Fitness' option, and technical support to our independent dealers and servicing organizations. In the absence of a dealer or service organization, these warranties will be administered by XTERRA Fitness directly to a consumer. The warranty period applies to the following components:

Home Use Limited Warranty		
Frame	Parts	Labor
1 Year	90 Days	None

NORMAL RESPONSIBILITIES OF THE CONSUMER

This warranty applies only to products in ordinary household use. The consumer is responsible for the items listed below:

1. The warranty registration card must be completed and returned to the address listed on the card within 10 days of the original purchase to validate the manufacturer's limited warranty or register online at the XTERRA Fitness website.
2. Proper use of the Folding Bike in accordance with the instructions provided in this manual, including maintenance.
3. Proper connection to a power supply of sufficient voltage, replacement of blown fuses, repair of loose connections or defects in house/facility wiring.
4. Expenses for making the Folding Bike accessible for servicing, including any item that was not part of the Folding Bike at the time it was shipped from the factory.
5. Damages to the Folding Bike finish during shipping, installation or following installation.

EXCLUSIONS

This warranty does not cover the following:

1. CONSEQUENTIAL, COLLATERAL, OR INCIDENTAL DAMAGES SUCH AS PROPERTY DAMAGE AND INCIDENTAL EXPENSESRESULTING FROM ANY BREACH OF THIS WRITTEN OR ANY IMPLIED WARRANTY. Note: Some states do not allow the exclusion or limitation of incidental or consequential damages, so this limitation or exclusion may not apply to you.
2. Service call reimbursement to the consumer. Service call reimbursement to the dealer that does not involve malfunction or defects in workmanship or material, for units that are beyond the warranty period, for units that are beyond the service call reimbursement period, for Folding Bikes not requiring component replacement, or Folding Bikes not in ordinary household use.
3. Damages caused by services performed by persons other than authorized XTERRA Fitness service companies, use of parts other than original XTERRA Fitness parts, or external causes such as alterations, modifications, abuse, misuse, accident, improper maintenance, inadequate power supply, or acts of God.
4. Products with original serial numbers that have been removed or altered.
5. Products that have been; sold, transferred, bartered, or given to a third party.
6. Products that are used as store display models.
7. Products that do not have a warranty registration on file at XTERRA Fitness Inc. XTERRA Fitness reserves the right to request proof of purchase if no warranty record exists for the product.
8. Product use in any environment other than a residential setting.
9. THIS WARRANTY IS EXPRESSLY IN LIEU OF ALL OTHER WARRANTIES EXPRESSED OR IMPLIED, INCLUDING THE WARRANTIES OF MERCHANTABILITY AND/OR FITNESS FOR A PARTICULAR PURPOSE.

SERVICE

Keep your bill of sale. Twelve (12) months from the date on the bill of sale or eighteen (18) months from the date of factory shipping as determined by the serial number establishes the warranty period should service be required. If service is performed, it is in your best interest to obtain and keep all receipts. This written warranty gives you specific legal rights. You may also have other rights that vary from state to state. Service under this warranty must be obtained by following these steps, in order:

1. Contact your selling authorized XTERRA Fitness dealer. OR
2. Contact your local authorized XTERRA Fitness service organization.
3. If there is a question as to where to obtain service, contact our service department at (870)333-5500
4. XTERRA Fitness' obligation under this warranty is limited to repairing or replacing, at XTERRA Fitness' option, the product through one of our authorized service centers. All repairs must be preauthorized by XTERRA Fitness. If the product is shipped to a service center freight charges to and from the service center will be the customer's responsibility. For replacement parts shipped while the product is under warranty, the customer will be responsible for shipping and handling charges. For in-home service, the customer will be responsible for a trip charge. There will be an additional trip charge if the customer is located over 100 miles from the nearest service center.
5. The owner is responsible for adequate packaging upon return to XTERRA Fitness. XTERRA Fitness is not responsible for damages in shipping. Make all freight damage claims with the appropriate freight carrier. DO NOT SHIP ANY UNIT TO OUR FACTORY WITHOUT A RETURN AUTHORIZATION NUMBER. All units arriving without a return authorization number will be refused.
6. For any further information, or to contact our service department by mail, send your correspondence to:

XTERRA Fitness, Inc.
P.O. Box 2037
Jonesboro, AR 72402-2037

Product features or specifications as described or illustrated are subject to change without notice. All warranties are made by XTERRA Fitness, Inc. This warranty applies only in the 48 contiguous United States. NOTE: This does not include Alaska or Hawaii.

3000 Nestle Road Jonesboro, AR 72401 - Phone:870-333-5500 - Fax:870-935-7611

©2021 All RIghts Reserved.