XTERRA® FITNESS™

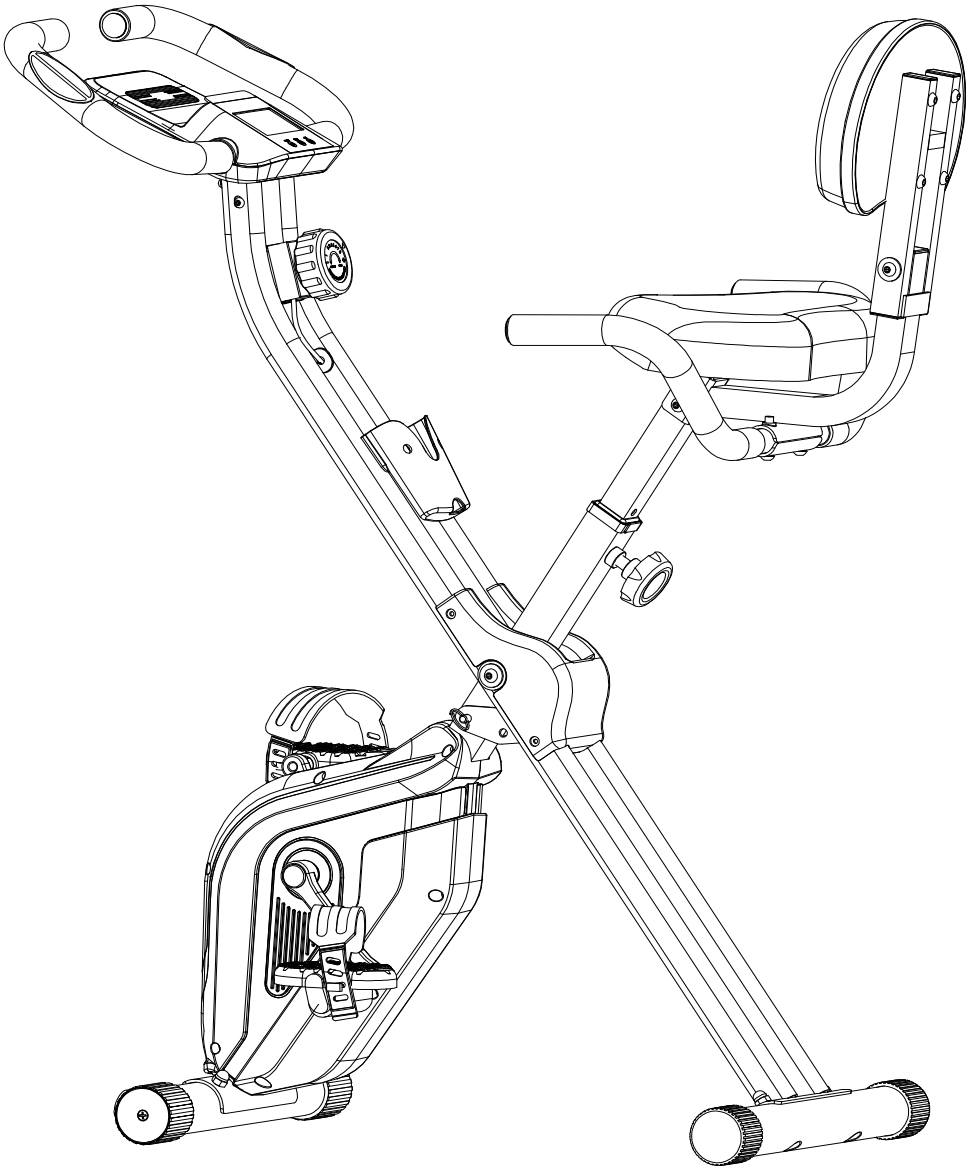

FB360 Folding Bike
OWNER'S MANUAL

PLEASE CAREFULLY READ THIS ENTIRE MANUAL BEFORE OPERATING YOUR NEW FOLDING BIKE

Congratulations On Your New Folding Bike and Welcome to the XTERRA Fitness Family!

Thank you for your purchase of this quality Folding Bike from **XTERRA Fitness**. Your new Folding Bike has been manufactured by one of the leading fitness manufacturers in the world. **XTERRA Fitness** will do all we can to make your ownership experience as pleasant as possible for many years to come. If you have questions, or if parts are missing or damaged, or you require customer service, call (870) 333-5500. Please have your model number and serial number handy when you call.

Please take a moment to record where you purchased your machine, as well as the date of purchase for future reference. We appreciate your confidence in **XTERRA Fitness** and we will always remember that you are the reason that we are in business. Please complete and mail your registration card today and enjoy your new Folding Bike.

Yours in Health,
XTERRA Fitness

Table Of Contents

Product Registration	**1**
Important Safety Instructions	**2**
FB360 Assembly Instructions	**6**
Operation of Your Console	**13**
Parts List	**16**
Exploded View	**19**
Manufacturer’s Limited Warranty	**20**

Product Registration

Purchase Location _____

Purchase Date _____

Record Your Serial Number
Please record the Serial Number of this fitness product
in the space provided below.

Serial Number _____

Register Your Purchase
The self-addressed product registration card must be completed in full and returned to **XTERRA Fitness**. You can also go to ***www.xterrafitness.com/warrantyreg.html*** to register online.

Manufacturer's 90 Day Limited Warranty

Your XTERRA Folding Bike is warranted for 90 days from the date of purchase against defects in material when used for the purpose intended, under normal conditions and provided it receives proper care. Any part found defective or missing will be sent at no cost when returned in accordance with the terms of this warranty.

This warranty is not transferable and is extended only to the original owner.

The warranty shall not apply to exercise units which are (1) used for commercial or other income producing purposes, or (2) subject to misuse, neglect, accident or unauthorized repair and alterations.

This warranty provided herein is lieu of all other express warranties, any implied warranties, including any implied warranties of merchantability of fitness for particular purpose, are limited in duration to the first 90 days from date of purchase. All other obligations or liabilities, including liability for consequential damages are hereby excluded.

ATTENTION

THIS FOLDING BIKE IS INTENDED FOR **RESIDENTIAL USE ONLY** AND IS WARRANTED FOR THE APPLICATION. ANY OTHER APPLICATION **VOIDS** THIS WARRANTY IN ITS ENTIRETY.

Important Safety Instructions

When using an electrical appliance, basic precautions should always be followed, including the following:

Read all instructions before using this appliance.

WARNING - To reduce the risk of burns, fire electric shock, or injury to persons:

1. Do not operate under blanket or pillow. Excessive heating can occur and cause fire, electric shock, or injury to persons.
2. This exercise equipment is not intended for use by persons with reduced physical, sensory or mental capabilities, or lack of experience and knowledge.
3. Use this appliance only for its intended use as described in this manual. Do not use attachments not recommended by the manufacturer.
4. Never operate the appliance with the air openings blocked. Keep the air openings free of lint, hair, and the like.
5. Never drop or insert any object into any opening.
6. Do not use outdoors.
7. Do not operate where aerosol (spray) products are being use or where oxygen is being administered.
8. The appliance is intended for household use.



WARNING: This product can expose you to chemicals including Toluene and Acrylamide which are known to the State of California to cause cancer and birth defects or other reproductive harm.
For more information go to www.P65Warnings.ca.gov

Fitness Equipment Safety Instructions

- Do not operate equipment on deeply padded, plush or shag carpet. Damage to both carpet and equipment may result.
- Before beginning this or any exercise program, consult a physician. This is especially important for persons over the age of 35 or persons with pre-existing health conditions.
- Keep hands away from all moving parts.
- The pulse sensors are not medical devices. Various factors, including the user's movement, may affect the accuracy of heart rate readings. The pulse sensors are intended only as exercise aids in determining heart rate trends in general.
- Do not attempt to use your equipment for any purpose other than for the purpose it is intended.
- Wear proper shoes. High heels, dress shoes, sandals or bare feet are not suitable for use on your equipment. Quality athletic shoes are recommended to avoid leg fatigue.
- Weight Limit: 250 LBS.

Failure to follow all guidelines may compromise the effectiveness of the exercise experience, expose yourself (and possibly others) to injury, and reduce the longevity of the equipment.

SAVE THESE INSTRUCTIONS - THINK SAFETY!

CAUTION!! Please be careful when unpacking the carton.

Before you begin

Thank you for selecting our revolutionary XTERRA Fitness FB360 Folding Bike. A folding bike is an effective exercise for increasing cardiovascular fitness, building endurance, and toning the body. Our fitness folding bike provides an impressive selection of features designed to make your workouts at home more effective and enjoyable.

For your benefit, read this manual carefully before you use the XTERRA Fitness FB360 Folding Bike. To help us assist you, note the product model number and serial number before contacting us. Before reading further, please familiarize yourself with the parts that are labeled in the drawing below.

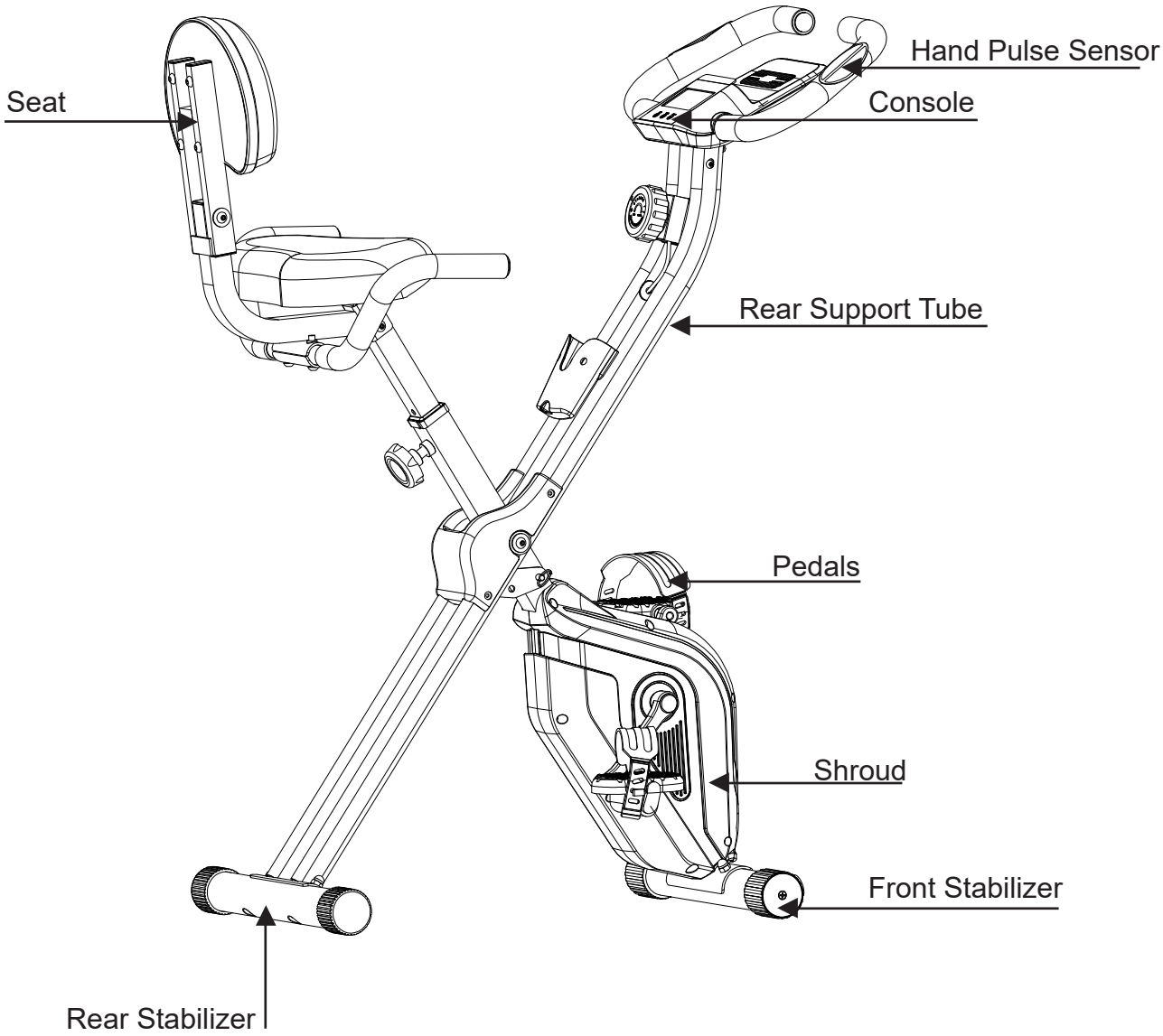

FB360 Assembly Pack Checklist

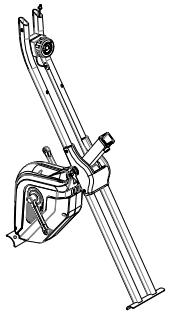

No. 01/02
Main Frame
(1pc)

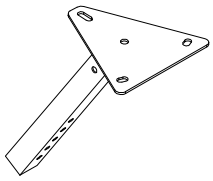

No. 03
Seat Support Tube
(1pc)

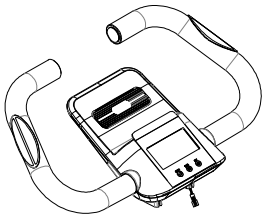

No. 04/08
Handlebar Tube/Console
(1pc)

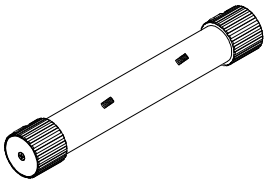

No. 05
Front Stabilizer
(1pc)

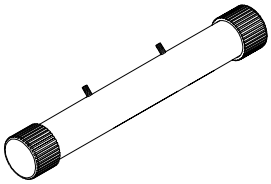

No. 06
Rear Stabilizer
(1pc)

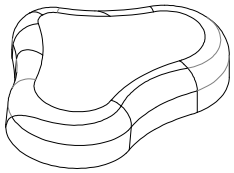

No. 07
Seat
(1pc)

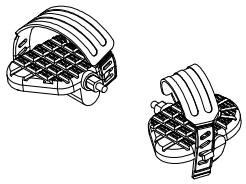

No. 09L/R
Pedal
(1pc)

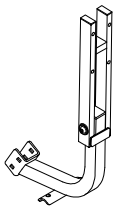

No. 74/75
Back Cushion Support Tube Set
(1pc)

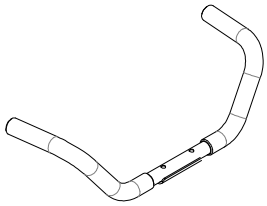

No. 76
Rear Handlebar
(1pc)

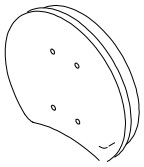

No. 77
Back Cushion
(1pc)



No. 89
Remote Control Holder
(1pc)

FB360 Assembly Part Checklist

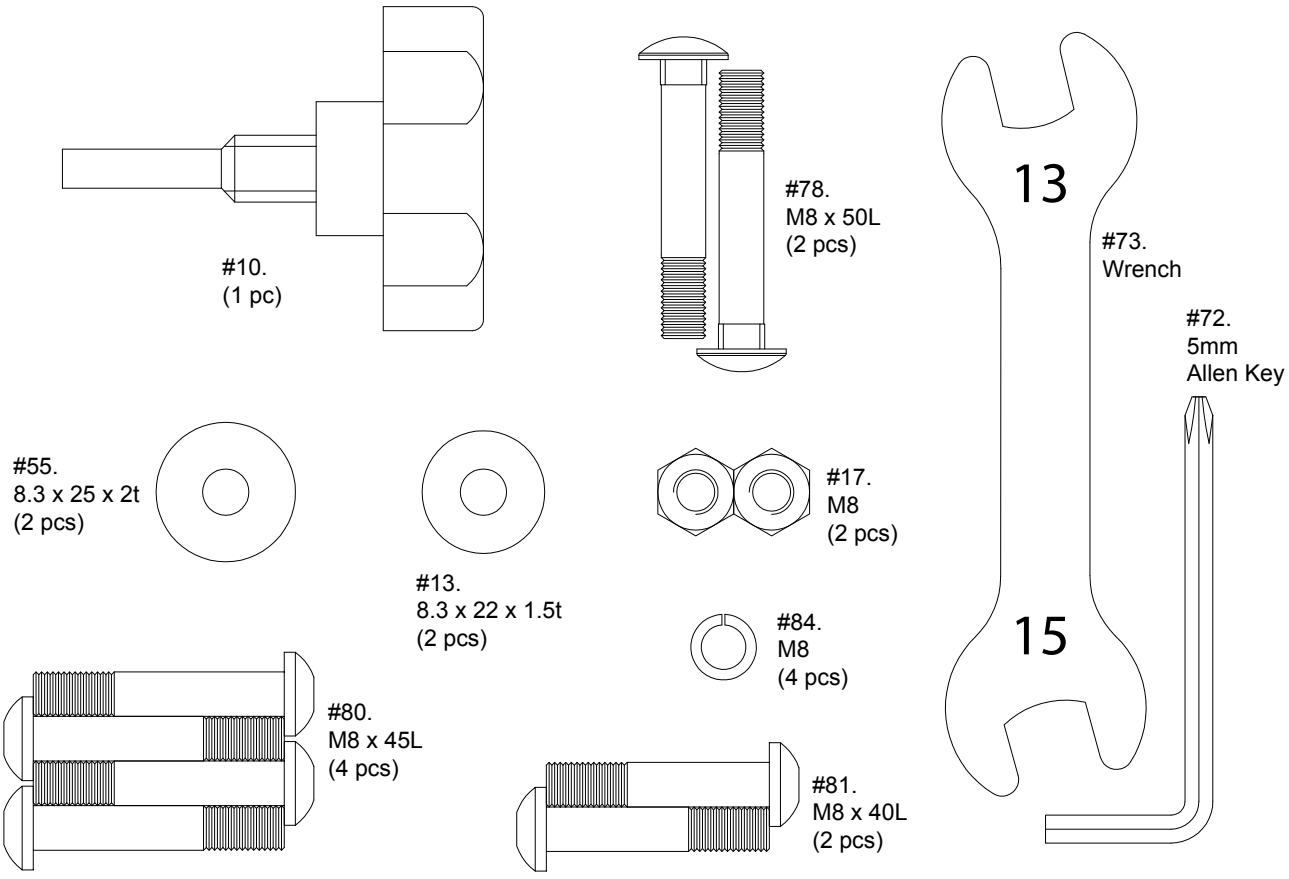

Part No	Description	Q'ty
10	Club Knob	1
17	Nylon Nut M8	2
13	Curved Washer φ8.3xφ22	2
78	Carriage Bolt M8x50L	2
81	Allen Screw M8x40L	2
55	Flat Washer φ8.3xφ25	2
84	Spring Washer	4
80	Allen Screw M8x45L	4
72	Allen Key	1
73	Hex Head Wrench	1

Note: Above parts are all needed to assemble this machine. Before you start to assemble, please check your unit to make sure they are included. The parts for this machine are preassembled on the unit.

FB360 Assembly Instructions

1 Front Stabilizer and Rear Stabilizer

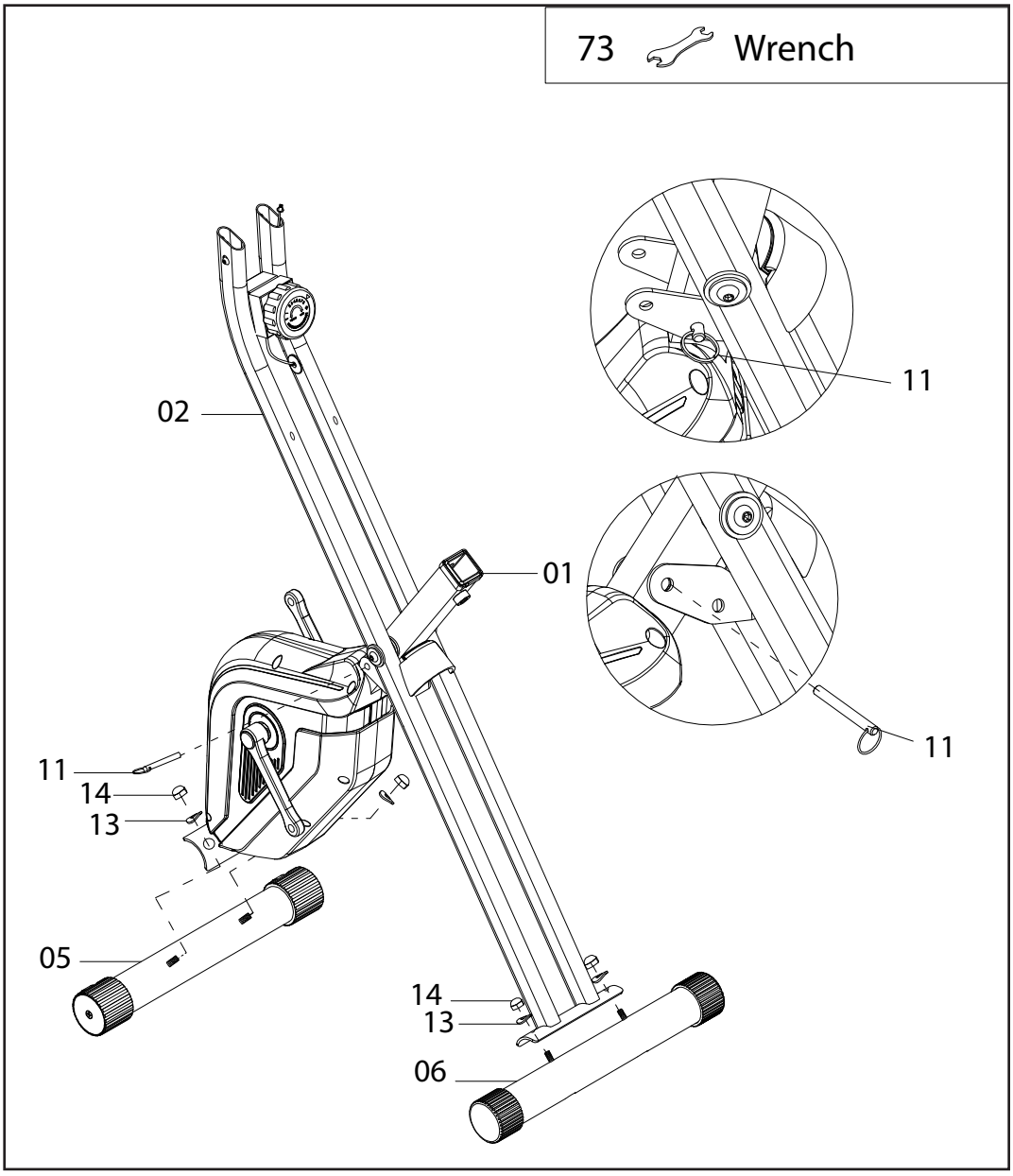

1. Pull out the **Lock Pin (No. 11)** from the **Front Support Tube (No. 01)** and adjust the **Front Support Tube (No. 01)** to the open position then re-insert the **Lock Pin (No. 11)** to secure the frame position.

2. Attach the **Front Stabilizer (has wheels) (No. 05)** to the **Front Support Tube (No. 01)**, tighten with the pre-installed 2 **Curved Washers (No.13)** and 2 **Domed Nuts (No. 14)**.

3. Repeat the procedure for the **Rear Stabilizer (No. 06)**.

2 Pedals

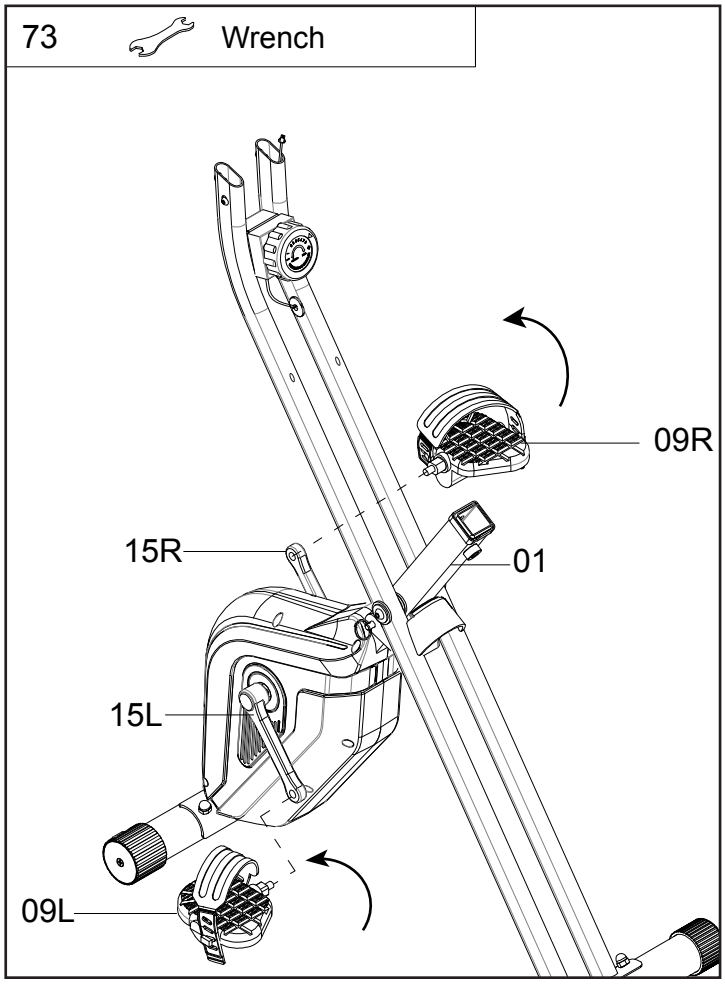

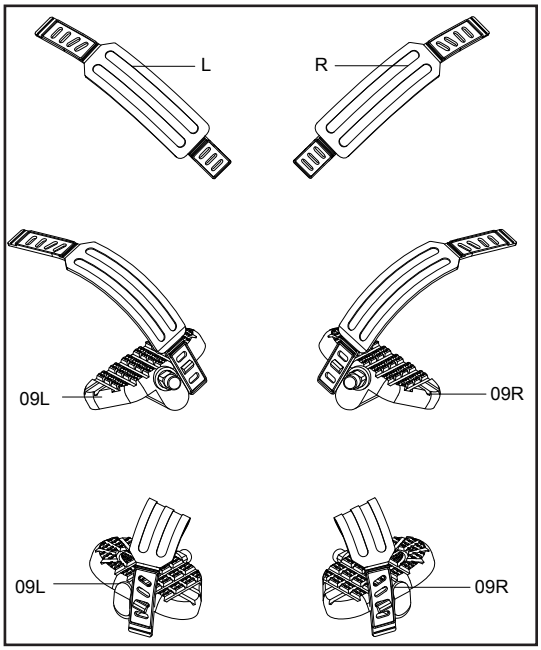

1. Connect the **Left Pedal Strap (L)** to the **Left Pedal (No. 09L)**. Adjust the pedal strap to the length you need. Assemble the **Right Pedal Strap (R)** to the **Right Pedal (No. 09R)** in the same way.

2. Connect the **Left and Right Pedal (No. 09L & 09R)** to their appropriate **Crank (No. 15L & 15R)**. The right pedal is on the right hand side of the bike as you sit on it. The **Right Pedal (No. 09R)** should be tightened clockwise and the **Left Pedal (No. 09L)** counter-clockwise. The left pedal should turn towards the front of the machine (counterclockwise) when screwing them on.

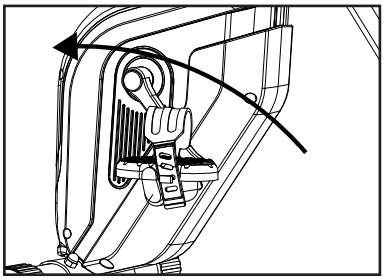

Left pedal assembly

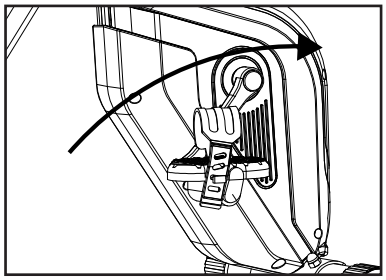

Right pedal assembly

3 Seat

10		Club knob
73		Wrench

Fig. 3.1

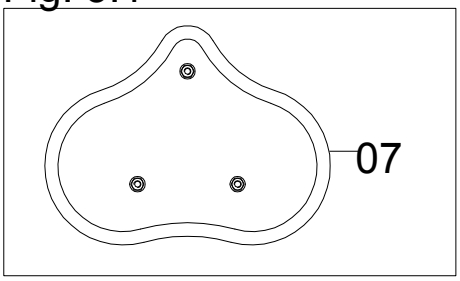

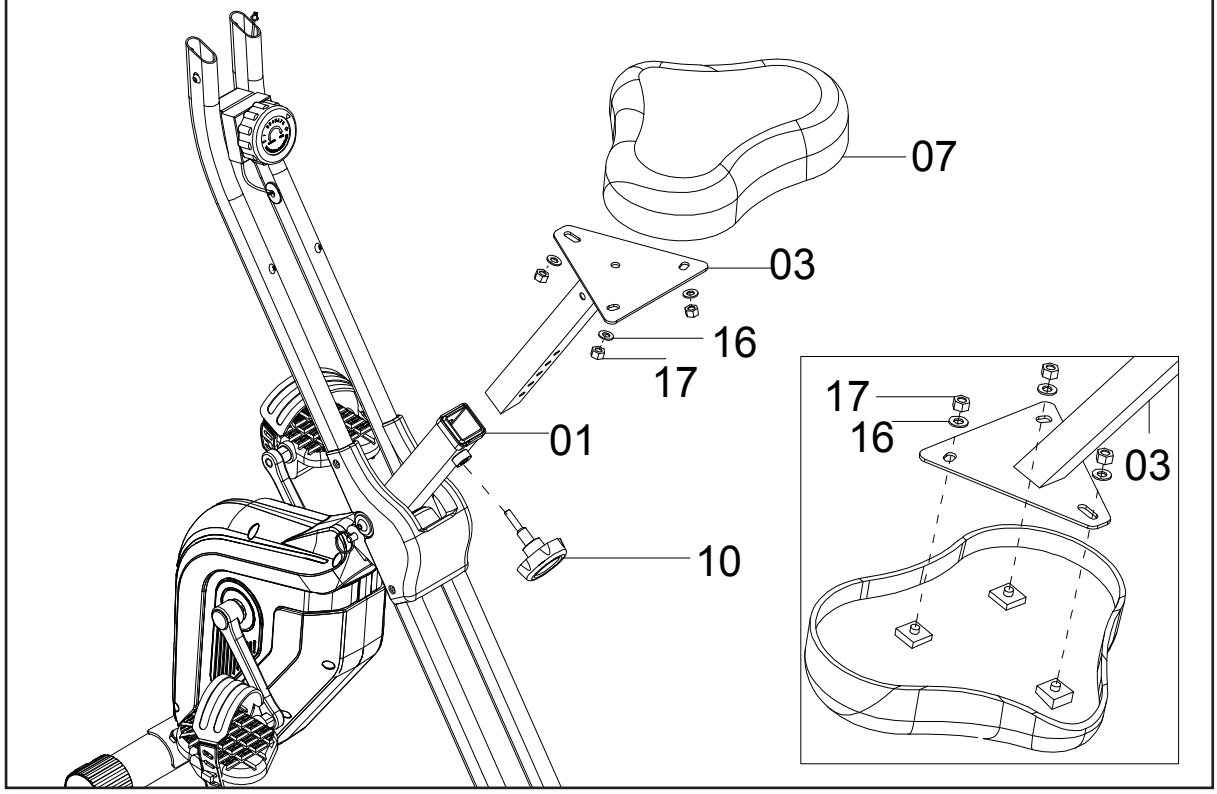

1. Remove the pre-intalled 3 **Flat Washers (No. 16)** and 3 **Nylon Nuts (No. 17)** from the back of **Seat (No. 07)** (see fig. 3.1). Attach the **Seat (No. 07)** to the **Seat Support Tube (No. 03)**, using the pre-installed 3 **Flat Washers (No.16)** and 3 **Nylon Nuts (No. 17)**.

2. Insert the **Seat Support Tube (No. 03)** to the **Front Support Tube (No. 01)**; fasten with the **Club Knob (No. 10)**.

4 Back Cushion & Rear Handlebar

17	(2 pcs)	M8	55	(2 pcs)	8.3 x 25 x 2t
78	(2 pcs)	M8 x 50L	80	(4 pcs)	M8 x 45L
84	(4 pcs)	M8	72		Allen Key
			73		Wrench

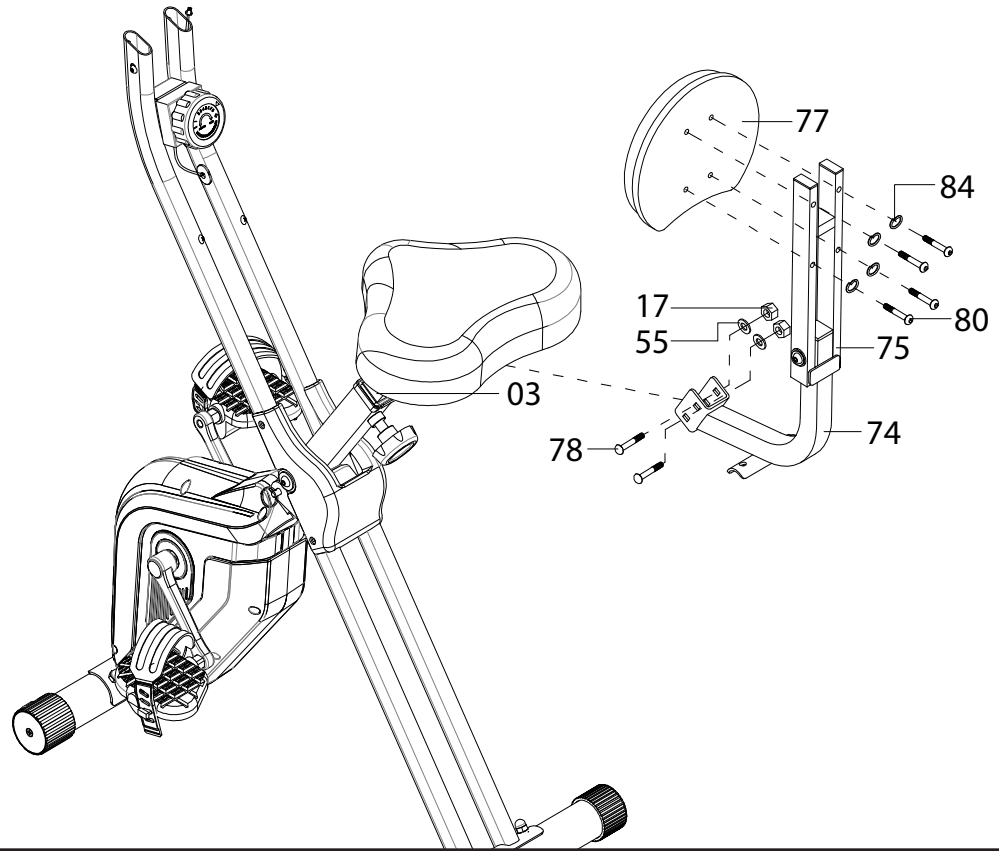

1. Attach the **Back Cushion Adjustment Set (No. 74)** to the **Seat Support Tube (No. 03)**, secure with 2 **Carriage Bolts (No. 78)**, 2 **Nylon Nuts (No. 17)** and 2 **Flat Washers (No. 55)**.

2. Attach the **Back Cushion (No. 77)** onto the **Back Cushion Support Tube (No. 75)**, secure with 4 **Spring Washers (No. 84)** and 4 **Allen Screws (No. 80)**.

5 Handlebar and Console

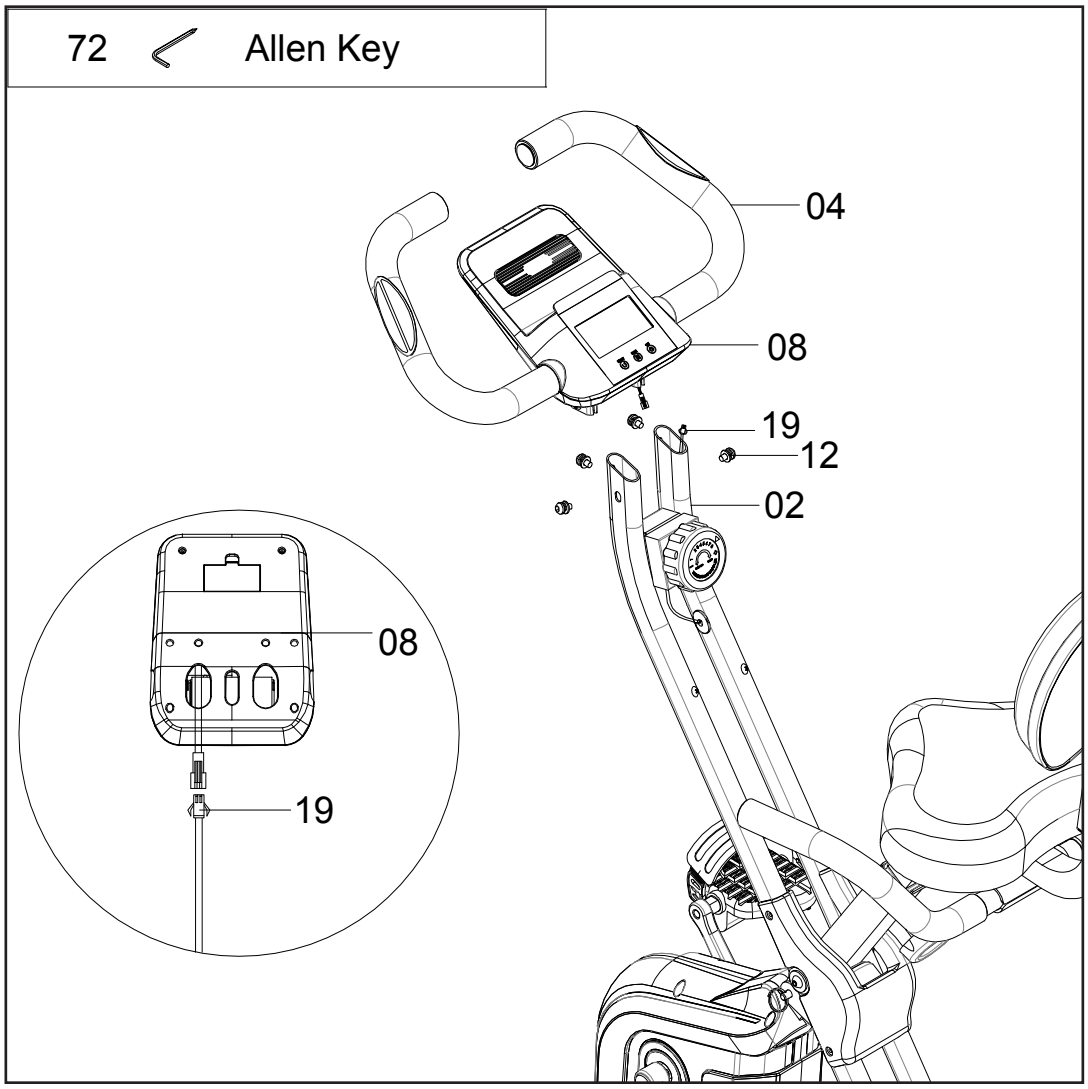

1. Remove the pre-installed 4 **Screw Sets (No. 12)** from the **Handlebar Tube (No. 04)**.

2. Connect the **Middle Sensor Wire (No.19)** to the **Console (No.08)**.

3. Insert the **Handlebar Tube (No. 04)** to the **Rear Support Tube (No. 02)**, secure with the 4 **Screw Sets (No. 12)**.

6 Rear Handles

13 (2 pcs) 8.3 x 22 x 1.5t	81 (2 pcs) M8 x 40L
72 Allen Key	

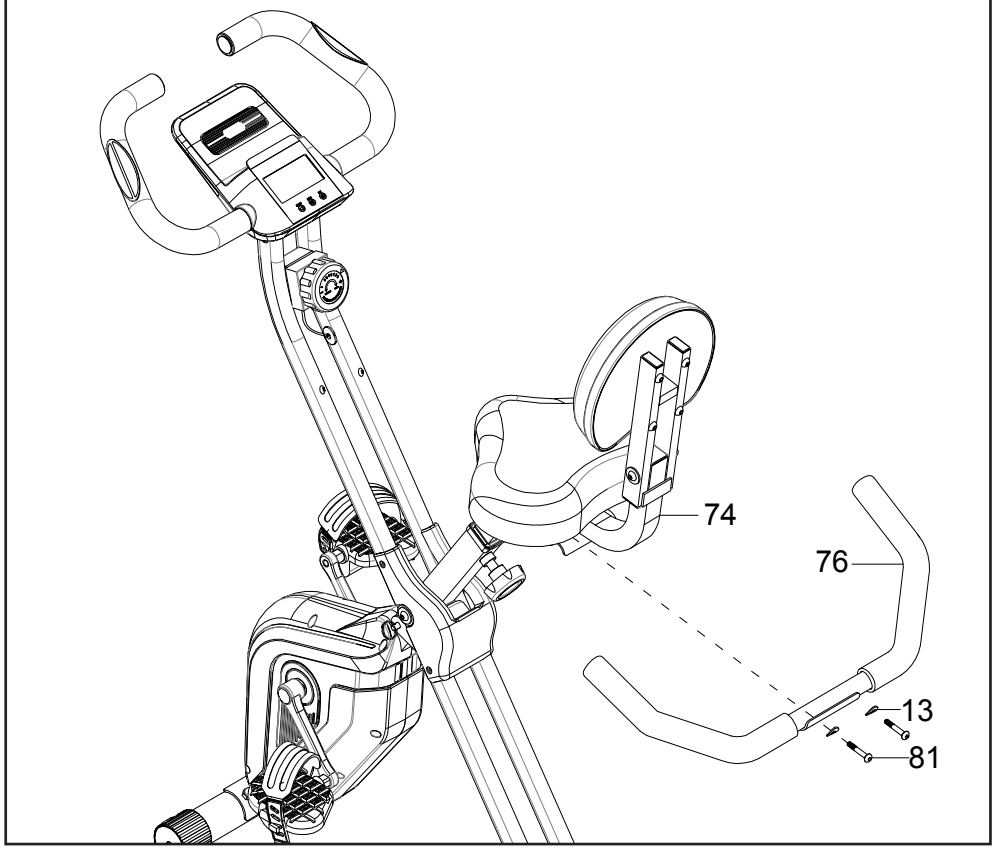

1. Attach the **Rear Handlebar (No. 76)** onto **Back Cushion Adjustment Set (No. 74)**, secure with the 2 **Allen Screws (No. 81)** and 2 **Curved Washers (No. 13).**

7 Remote-Control Holder

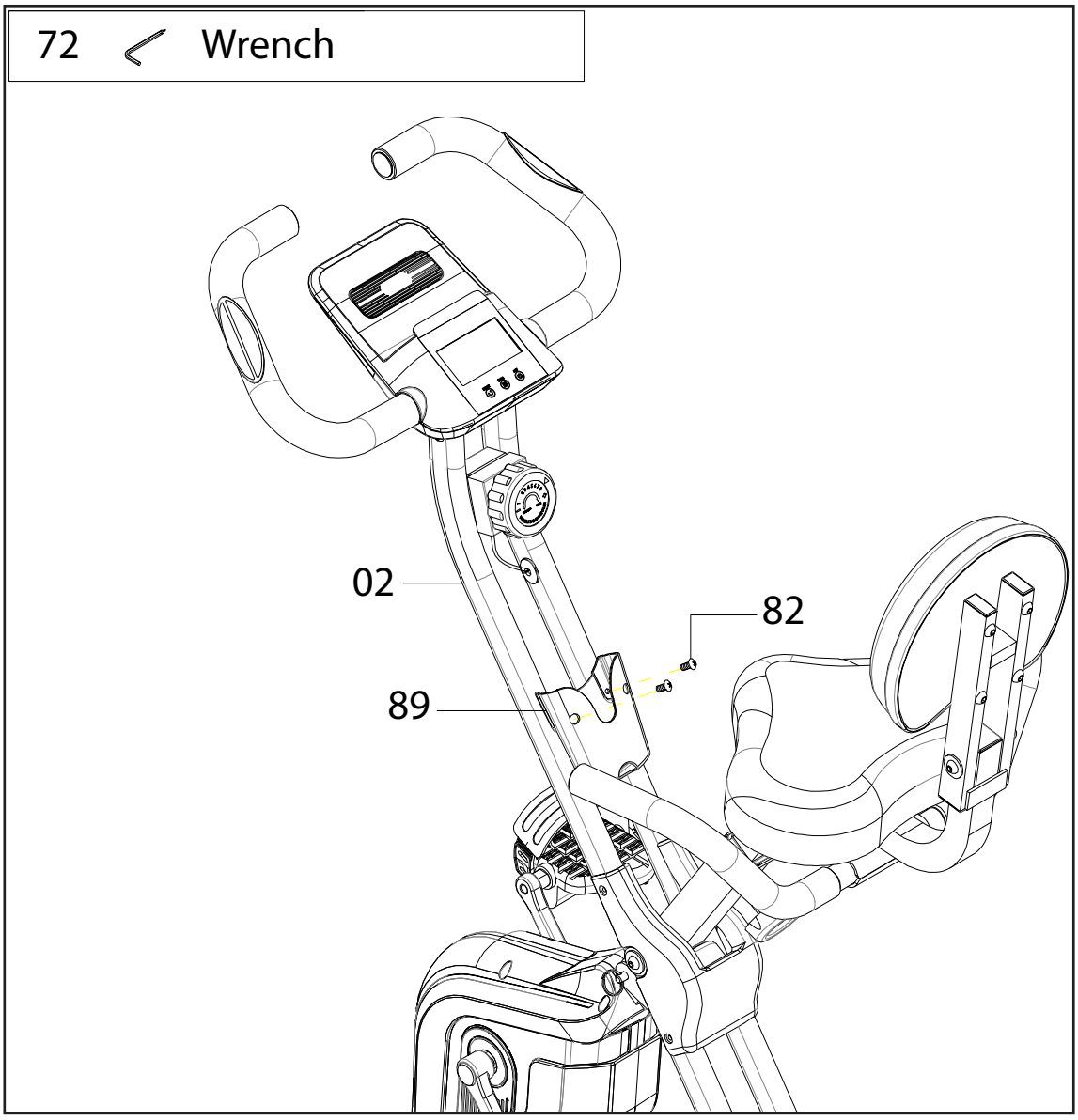

1. Remove the pre-installed 2 **Screws (No. 82)** from the **Rear Support Tube (No. 02)**, attach the **Remote Control Holder (No. 89)** onto the **Rear Support Tube (No. 02)**, and secure with the 2 **Screws (No. 82)**.

Operation of Your Console

FB360 Console



Functions	AUTO SCAN	Every 6 seconds
	TIME	0:00 ~ 99:59
	SPEED	0.0 ~ 999.9 KM/H (MILE/H)
	DISTANCE	0.00 ~ 999.9 KM (MILE)
	CALORIES	0.0 ~ 999.9 CAL
	ODOMETER	0.0 ~ 9999 KM (MILE)
	PULSE	40 ~ 240 BPM
BATTERY TYPE		2 AAA or UM 4
OPERATING TEMPERATURE		0°C ~ +40°C, 32˚F ~ 104˚F
STORAGE TEMPERATURE		-10°C ~ +60°C, 14˚F ~ 140˚F

Key Functions

BUTTONS

MODE - Push down for selecting functions.

SET - To Set the consumer movement of time, distance, calories and hand pulse.

RESET -For resetting consumer movement of time, distance, calories and hand pulse.

FUNCTIONS AND OPERATIONS

SCAN: Press the MODE button until SCAN appears, the monitor will rotate through the 6 functions: time, speed, distance, calorie, odometer, and pulse. Each display will be held 6 seconds.

TIME: Shows your elapsed workout time. Press the MODE button until “TIME” appears, press SET button to set target time

SPEED: Display current speed.

DISTANCE: Count the distance from exercise start to end. The maximum value is 999.99 miles. Press the MODE button until “DISTANCE” appears, press SET button to set target distance.

CALORIE: Count the total calories from exercise start to end. Press the MODE button until “CALORIE” appears, press SET button to set target calories.

ODOMETER: Monitor will display the total accumulated distance.

PULSE RATE: Press the MODE button until “PULSE” appears. Press SET button to set target heart rate. The heart rate range can be set anywhere from 40 - 240 BPM.

Before measuring your pulse rate, please place your palms of the hands on both of the contact pads. The monitor will show your current heart rate in beats per minute(BPM) on the LCD after 6~7 seconds.

During the process of pulse measurement, the measurement value may be higher than the actual pulse rate during the first 2~3 seconds of reading, after which it will stabilize and display a more accurate reading. The heart rate measurement value is not intended to be and should not be used as the basis for medical treatment.

NOTE

- If the display is faint or shows no figures, please replace the batteries.
- The monitor will automatically shut off if there is no signal received after 4 minutes.

STORAGE AND MAINTENANCE

HOW TO MOVE THE FOLDING BIKE
To move the folding bike, grasp the rear stabilizer and carefully lift it until the exercise folding bike can be rolled on the front wheels. Carefully move the folding bike to the desired location and then lower it.

Maintenance
Depending on your workout regimen, checks should be made weekly or before each workout. This will help ensure your safety, as well as help maintain the integrity and performance of the machine. Please see below for more detail:

- Check that the pedals are tightened securely as they can loosen over time.
- Check that seat nuts are secure.
- Check that stabilizer bolts are tight.
- Check that handlebar is secure.
- Tighten any parts that may have loosened over time before proceeding with your workout.

NOTE: Should any part become defective, contact XTERRA Customer Service immediately to order replacement parts or seek advice on proper service. Discontinue use until the defective part has been repaired.

Cleaning
A damp cloth is sufficient to clean most surfaces of this unit. Be careful not to drip water on the monitor. A mild liquid soap may be added if needed.

PARTS LIST

Part No.	Serial No.	Description	Qty
01	FB360-665H-PART01	Front support tube	1
02	FB360-665H-PART02	Rear support tube	1
03	FB360-665H-PART03	Seat support tube	1
04	FB360-665H-PART04	Handlebar tube	1
05	FB360-665H-PART05	Front stabilizer	1
06	FB360-665H-PART06	Rear stabilizer	1
07	FB360-665H-PART07	Seat DD-306	1
08	FB360-665H-PART08	Console X3529	1
09L/R	FB360-665H-PART09	Pedal (L/R) JG-16B	1/1
10	FB360-665H-PART10	Club knob M12	1
11	FB360-665H-PART11	Lock pin φ8x70L	1
12	FB360-665H-PART12	Screw Set	4
13	FB360-665H-PART13	Curved washer φ8.3xφ22	6
14	FB360-665H-PART14	Domed nut M8	5
15L/R	FB360-665H-PART15	Crank (L/R)	1/1
16	FB360-665H-PART16	Flat washer φ8.3xφ17.5	3
17	FB360-665H-PART17	Nylon nut M8	5
18	FB360-665H-PART18	Hand pulse wire	1
19	FB360-665H-PART19	Middle sensor wire	1
20	FB360-665H-PART20	Flat washer φ4.3xφ12	2
21	FB360-665H-PART21	Sensor bracket	1
22	FB360-665H-PART22	Allen bolt M8x15L & Flat washer 25x2.0t	2
23	FB360-665H-PART23	End cap for handlebar	4
24	FB360-665H-PART24	EVA pad	1
25	FB360-665H-PART25	Hand pulse sensor	2
26	FB360-665H-PART26	Foam grip for handlebar	2
27	FB360-665H-PART27	Lower sensor wire	1
28	FB360-665H-PART28	Screw M5x20L	1
29	FB360-665H-PART29	Flat washer φ10.3xφ25	1
30	FB360-665H-PART30	Self-tapping screw M4x10L	1
31	FB360-665H-PART31	Self-tapping screw ST4.2x12L	6
32	FB360-665H-PART32	Self-tapping screw ST4.2x20L	11
33	FB360-665H-PART33	Magnet assembly	1

PARTS LIST

34	FB360-665H-PART34	Axle for Main frame	1
35	FB360-665H-PART35	Flat washer φ5.2xφ18	1
36	FB360-665H-PART36	Pulley	1
37	FB360-665H-PART37	Plastic washer φ6.5 xφ13	1
38	FB360-665H-PART38	Nylon nut M10	1
39	FB360-665H-PART39	Flywheel	1
40	FB360-665H-PART40	Axle for pulley	1
41	FB360-665H-PART41	Idler wheel	1
42	FB360-665H-PART42	Fixed plate	2
43	FB360-665H-PART43	Hex head nut M10	2
44	FB360-665H-PART44	Hex head nut M6	1
45	FB360-665H-PART45	Nut M10	1
46	FB360-665H-PART46	Screw M6x10L	6
47	FB360-665H-PART47	Tension knob	1
48	FB360-665H-PART48	Grommet	1
49	FB360-665H-PART49	Flange nut M10	2
50	FB360-665H-PART50	Hex head blot M6x30L	1
51	FB360-665H-PART51	C-Clip	6
52	FB360-665H-PART52	Wave washer	1
53	FB360-665H-PART53	Flywheel adjustor	2
54	FB360-665H-PART54	Spring	1
55	FB360-665H-PART55	Flat washer φ8.3xφ25	4
56	FB360-665H-PART56	Bearing	2
57	FB360-665H-PART57	End cap for crank	2
58	FB360-665H-PART58	Bushing for seat post	1
59	FB360-665H-PART59	Screw M5x10L	1
60	FB360-665H-PART60	Pulley	1
61	FB360-665H-PART61	Bearing bracket	2
62	FB360-665H-PART62	Cushion rubber	1
63	FB360-665H-PART63	Bushing	6
64	FB360-665H-PART64	Plastic washer φ14 xφ10.3	1
65	FB360-665H-PART65	Belt	2
66	FB360-665H-PART66	Grommet	3

PARTS LIST

67	FB360-665H-PART67	End cap for rear stabilizer	2
68	FB360-665H-PART68	End cap for front stabilizer	2
69	FB360-665H-PART69	Chain cover (L)	1
70	FB360-665H-PART70	Chain cover (R)	1
71	FB360-665H-PART71	Screw M5x8L	2
72	FB360-665H-PART72	Allen key	1
73	FB360-665H-PART73	Hex head wrench	1
74	FB360-665H-PART74	Back Cushion Adjustment Set	1
75	FB360-665H-PART75	Back Cushion Support Tube	1
76	FB360-665H-PART76	Rear Handlebar	1
77	FB360-665H-PART77	Back Cushion	1
78	FB360-665H-PART78	Carriage Bolt M8x50L	2
79	FB360-665H-PART79	Allen Screw M8x80L	1
80	FB360-665H-PART80	Allen Screw M8x45L	4
81	FB360-665H-PART81	Allen Screw M8x40L	2
82	FB360-665H-PART82	Screw M4x10L	2
83	FB360-665H-PART83	Plastic Washer φ20xφ8.5	2
84	FB360-665H-PART84	Spring Washer	4
85	FB360-665H-PART85	End cap □15x30	4
86	FB360-665H-PART86	End cap □30	1
87	FB360-665H-PART87	Foam Grip for Rear Handlebar	2
88	FB360-665H-PART88	Protective Cover	1
89	FB360-665H-PART89	Remote-control Holder	1
90	FB360-665H-PART90	Self-tapping screw ST2.9x8L	4

Exploded View

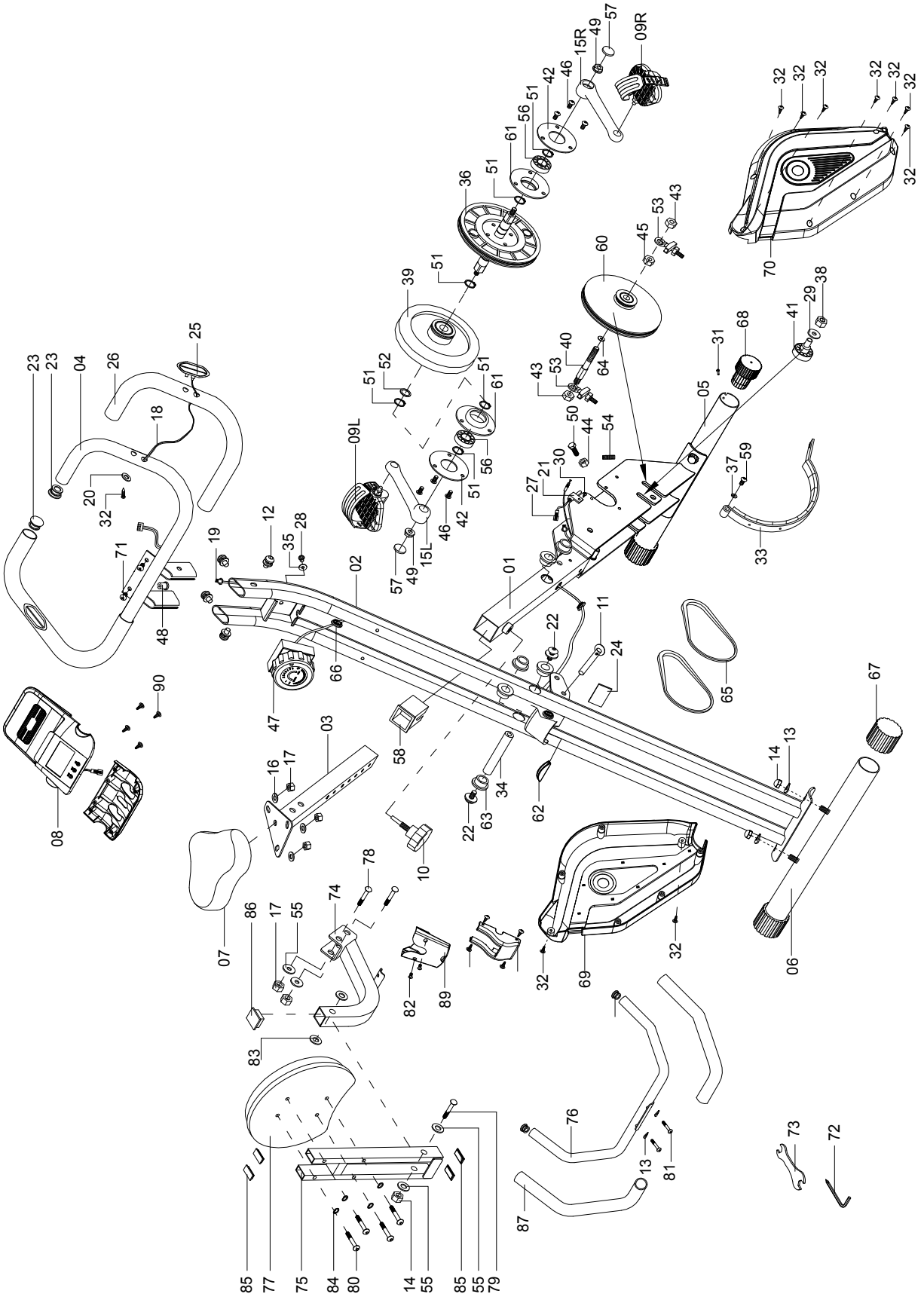

Manufacturer's Limited Warranty

Effective September 13, 2019 - Folding Bike LIMITED WARRANTY

XTERRA Fitness Inc. warrants all its home use Folding Bike parts for a period of time listed below, from the date of retail sale, as determined by a sales receipt or in the absence of a sales receipt, eighteen (18) months from the original factory shipping date. XTERRA Fitness' responsibilities include providing new or remanufactured parts, at XTERRA Fitness' option, and technical support to our independent dealers and servicing organizations. In the absence of a dealer or service organization, these warranties will be administered by XTERRA Fitness directly to a consumer. The warranty period applies to the following components:

Home Use Limited Warranty		
Frame	Parts	Labor
1 Year	90 Days	None

NORMAL RESPONSIBILITIES OF THE CONSUMER

This warranty applies only to products in ordinary household use. The consumer is responsible for the items listed below:

1. The warranty registration card must be completed and returned to the address listed on the card within 10 days of the original purchase to validate the manufacturer's limited warranty or register online at the XTERRA Fitness website.
2. Proper use of the Folding Bike in accordance with the instructions provided in this manual, including maintenance.
3. Proper connection to a power supply of sufficient voltage, replacement of blown fuses, repair of loose connections or defects in house/facility wiring.
4. Expenses for making the Folding Bike accessible for servicing, including any item that was not part of the Folding Bike at the time it was shipped from the factory.
5. Damages to the Folding Bike finish during shipping, installation or following installation.

EXCLUSIONS

This warranty does not cover the following:

1. CONSEQUENTIAL, COLLATERAL, OR INCIDENTAL DAMAGES SUCH AS PROPERTY DAMAGE AND INCIDENTAL EXPENSESRESULTING FROM ANY BREACH OF THIS WRITTEN OR ANY IMPLIED WARRANTY. Note: Some states do not allow the exclusion or limitation of incidental or consequential damages, so this limitation or exclusion may not apply to you.
2. Service call reimbursement to the consumer. Service call reimbursement to the dealer that does not involve malfunction or defects in workmanship or material, for units that are beyond the warranty period, for units that are beyond the service call reimbursement period, for Folding Bikes not requiring component replacement, or Folding Bikes not in ordinary household use.
3. Damages caused by services performed by persons other than authorized XTERRA Fitness service companies, use of parts other than original XTERRA Fitness parts, or external causes such as alterations, modifications, abuse, misuse, accident, improper maintenance, inadequate power supply, or acts of God.
4. Products with original serial numbers that have been removed or altered.
5. Products that have been; sold, transferred, bartered, or given to a third party.
6. Products that are used as store display models.
7. Products that do not have a warranty registration on file at XTERRA Fitness Inc. XTERRA Fitness reserves the right to request proof of purchase if no warranty record exists for the product.
8. Product use in any environment other than a residential setting.
9. THIS WARRANTY IS EXPRESSLY IN LIEU OF ALL OTHER WARRANTIES EXPRESSED OR IMPLIED, INCLUDING THE WARRANTIES OF MERCHANTABILITY AND/OR FITNESS FOR A PARTICULAR PURPOSE.

SERVICE

Keep your bill of sale. Warranty begins from the date on the bill of sale or three (3) months from the date of factory shipping as determined by the serial number should service be required. If service is performed, it is in your best interest to obtain and keep all receipts. This written warranty gives you specific legal rights. You may also have other rights that vary from state to state. Service under this warranty must be obtained by following these steps, in order:

1. Contact your selling authorized XTERRA Fitness dealer. OR
2. Contact your local authorized XTERRA Fitness service organization.
3. If there is a question as to where to obtain service, contact our service department at (870)333-5500
4. XTERRA Fitness' obligation under this warranty is limited to repairing or replacing, at XTERRA Fitness' option, the product through one of our authorized service centers. All repairs must be preauthorized by XTERRA Fitness. If the product is shipped to a service center freight charges to and from the service center will be the customer's responsibility. For replacement parts shipped while the product is under warranty, the customer will be responsible for shipping and handling charges. For in-home service, the customer will be responsible for a trip charge. There will be an additional trip charge if the customer is located over 100 miles from the nearest service center.
5. The owner is responsible for adequate packaging upon return to XTERRA Fitness. XTERRA Fitness is not responsible for damages in shipping. Make all freight damage claims with the appropriate freight carrier. DO NOT SHIP ANY UNIT TO OUR FACTORY WITHOUT A RETURN AUTHORIZATION NUMBER. All units arriving without a return authorization number will be refused.
6. For any further information, or to contact our service department by mail, send your correspondence to:

XTERRA Fitness, Inc.
P.O. Box 2037
Jonesboro, AR 72402-2037

Product features or specifications as described or illustrated are subject to change without notice. All warranties are made by XTERRA Fitness, Inc. This warranty applies only in the 48 contiguous United States. NOTE: This does not include Alaska or Hawaii.

3000 Nestle Road Jonesboro, AR 72401 - Phone:870-333-5500 - Fax:870-935-7611

©2019 All RIghts Reserved.