XTERRA® FITNESS



MBX2500 INDOOR CYCLE
OWNER'S MANUAL

PLEASE CAREFULLY READ THIS ENTIRE MANUAL BEFORE OPERATING YOUR NEW INDOOR CYCLE

Table Of Contents

Product Registration	**1**
Important Safety Instructions	**2**
Important Operation Instructions	**3**
MBX2500 Assembly Instructions	**4**
Operation of Your New Indoor Cycle	**10**
Troubleshooting	**15**
Manufacturer’s Limited Warranty	**16**

ATTENTION

THIS INDOOR CYCLE IS INTENDED FOR **RESIDENTIAL USE ONLY** AND IS WARRANTED FOR THE APPLICATION. ANY OTHER APPLICATION **VOIDS** THIS WARRANTY IN ITS ENTIRETY.

Congratulations On Your New Indoor Cycle and Welcome to the XTERRA Fitness Family!

Thank you for your purchase of this quality indoor cycle. Your new indoor cycle has been manufactured by one of the leading fitness manufacturers in the world and is backed by one of the most comprehensive warranties available. **XTERRA Fitness** will do all we can to make your ownership experience as pleasant as possible for many years to come.

If you have any questions about your new product or questions about the warranty contact **XTERRA Fitness** at **1-800-258-8511**. If you have a technical problem with your new indoor cycle contact **XTERRA Fitness** technical service at **800-258-8511**.

Please take a moment to record where you purchased your machine, as well as the date of purchase for future reference. We appreciate your confidence in **XTERRA Fitness** and we will always remember that you are the reason that we are in business. Please complete and mail your registration card today and enjoy your new indoor cycle.

Yours in Health,
XTERRA Fitness

Purchase Location _____

Purchase Date _____

Product Registration

Record Your Serial Number
Please record the Serial Number of this fitness product in the space provided below.

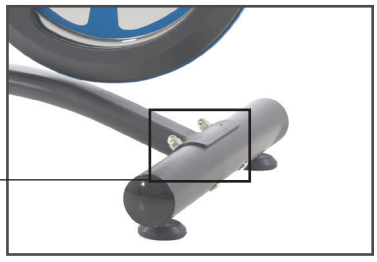

Serial Number _____

Register Your Purchase
The self-addressed product registration card must be completed in full and returned to **XTERRA Fitness**. You can also go to ***www.xterrafitnessstore.com/warrantyreg.html*** to register online.

MBX2500_20180821

Important Safety Instructions

WARNING - Read all instructions before using this appliance.

1. Use this equipment only for its intended use as described in this manual. Do not attempt to ride this bike at high pedal speeds until you have ridden the bike for some time and are comfortable riding at slower pedal speeds.
2. The bike is NOT equipped with a freewheel system which means that when the flywheel is in motion, the pedals will be in motion. Do not attempt to stop the unit by applying backward pressure to pedals while they are turning as knee injury may occur. Do not attempt to remove your feet from pedals while they are moving.
3. Wait for flywheel to coast to a stop before dismounting the bike. If you want to stop the flywheel, push down on the brake knob.
4. Serious injury or death may occur from over-training. Consult a medical doctor or qualified fitness instructor to determine an exercise program appropriate for your level of fitness.
5. Do not attempt to turn the pedal cranks by hand. Do not touch any driving mechanism while it is in motion as possible injury could occur.
6. In a home setting, keep children away from the bike when it is not in use. Keep children and pets away from the unit while it is in use.
7. Do not attempt to perform dip movements on handlebars.
8. Never drop or insert any object into any opening of the bike.
9. Only use the bike on a stable, level floor.
10. Follow instructions for safe use of the equipment including proper seat position, handlebar position, and use of foot positioning system of pedals. Do not attempt to pull up handlebar post and seat post over the 'MAX.' graduation.
11. For safe operation, allow for at least 1 foot (30cm) of free space to either side of the unit and 2 feet (60cm) of free space to the rear of the unit.



WARNING: This product can expose you to chemicals including Toluene and Acrylamide which are known to the State of California to cause cancer and birth defects or other reproductive harm. For more information go to www.P65Warnings.ca.gov

Regularly examine the bike for damage and wear. Inoperable components should be replaced immediately or the equipment should not be used until it is repaired.

Failure to follow all guidelines may compromise the effectiveness of the exercise experience, expose yourself (and possibly others) to injury, and reduce the longevity of the equipment.

SAVE THESE INSTRUCTIONS - THINK SAFETY!

Important Operation Instructions

WARNING - AS THE OWNER OF THIS EXERCISE EQUIPMENT, YOU SHOULD INSIST THAT ALL USERS FOLLOW THE SAME GUIDELINES: YOU SHOULD MAKE THIS MANUAL AVAILABLE TO ALL USERS.

1. Obtain a complete physical examination from your medical doctor and enlist a health/ fitness professional's aid in developing an exercise program suitable for your current health status.
2. When working out for the first time, start out slowly for a minimum of five minutes. After your muscles are warmed up, gradually increase the pedaling speed and/or resistance.
3. The speed and duration of your exercise program should always be subject to how you feel. Never permit peer pressure to exceed your personal judgment while exercising.
4. This exercise equipment is not intended for use by persons with reduced physical, sensory or mental capabilities, or lack of experience and knowledge.
5. Overweight or severely de-conditioned individuals should be particularly cautious when using the equipment for the first time. Even though such individuals may not have histories of serious physical problems, they may perceive the exercise to be far less intense than it really is, resulting in the possibility of overexertion or injury.
6. Proper installation and regular maintenance are required to ensure user's safety. Maintenance is the sole responsibility of the owner.

MBX**2500** Assembly Pack Checklist

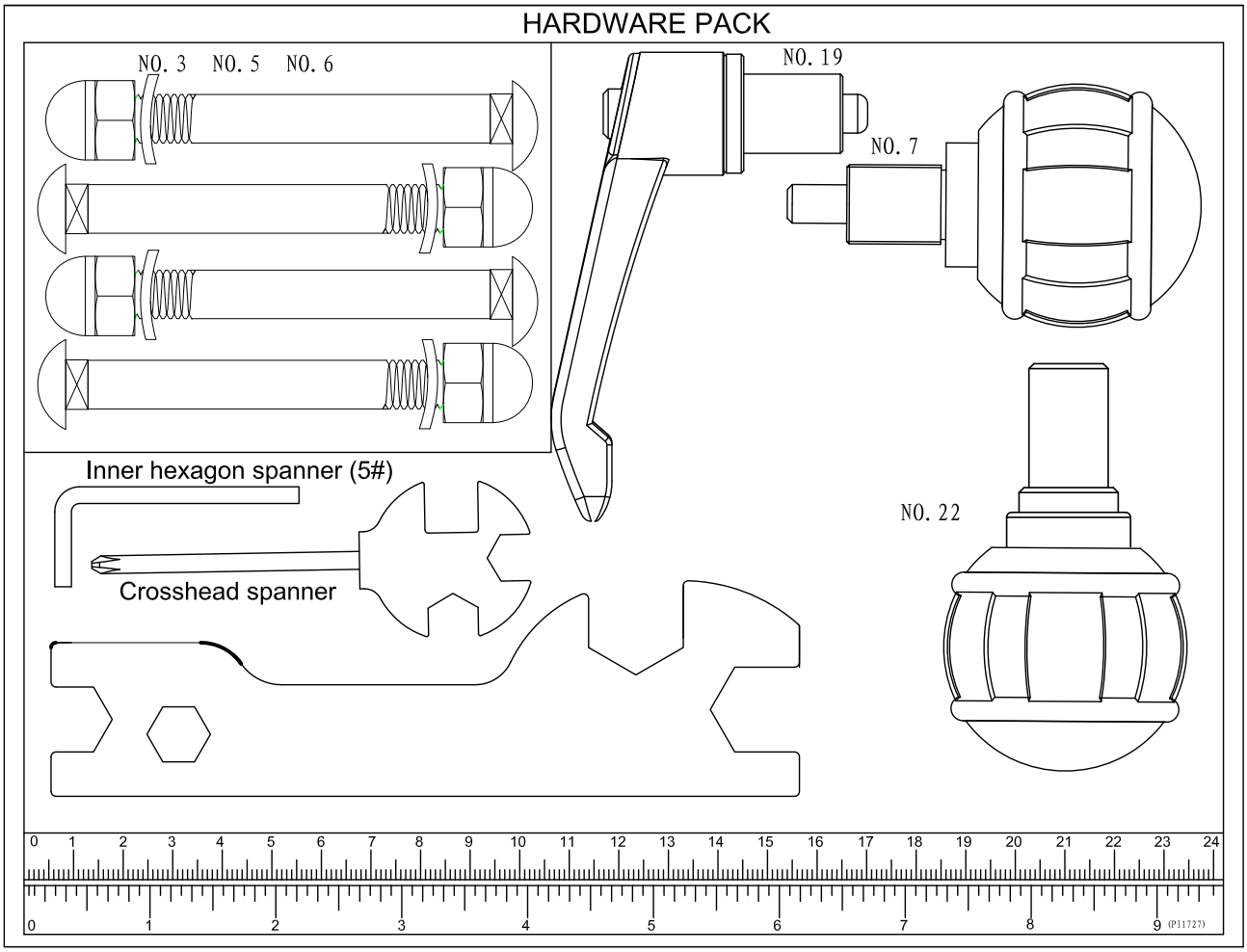

Part No.	Description	Q'TY
3	Carriage Bolt M10*90	4
5	Curved Washer φ10	4
6	Domed nut M10	4
7	Ball Type Quick Release Knob	1
19	L Type Quick Release Knob	1
22	Ball Type Knob	1
79	Cross Head Spanner	1
80	Spanner	1
81	Inner Hexagon Spanner	1

MBX**2500** Assembly Instructions

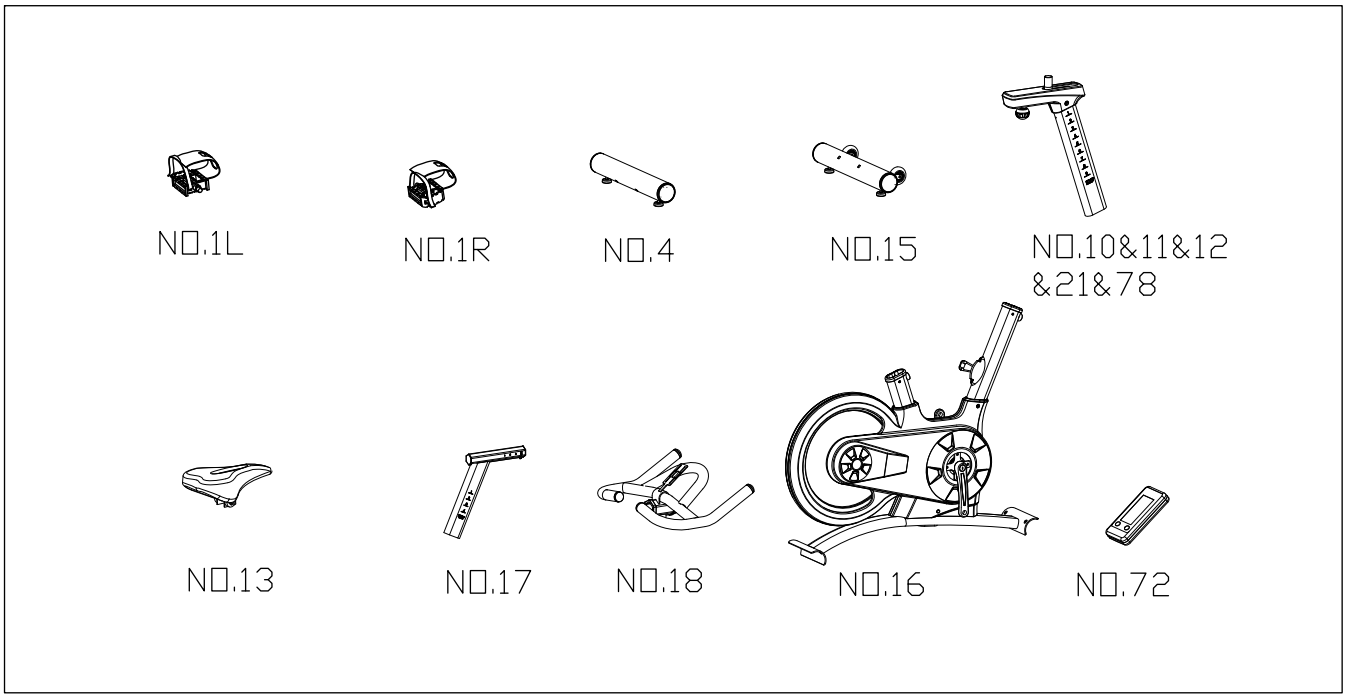

Part No.	Description	Q'TY
1L	Left Pedal	1
1R	Right Pedal	1
4	Rear Stabilizer	1
10/11/12/21/78	Seat Post Assembly	1
13	Seat	1
15	Front Stabilizer	1
16	Main Frame	1
17	Handlebar Post	1
18	Handlebar	1
72	Computer	1
	Hardware Pack	1
	User Manual	1

1 Stabilizers

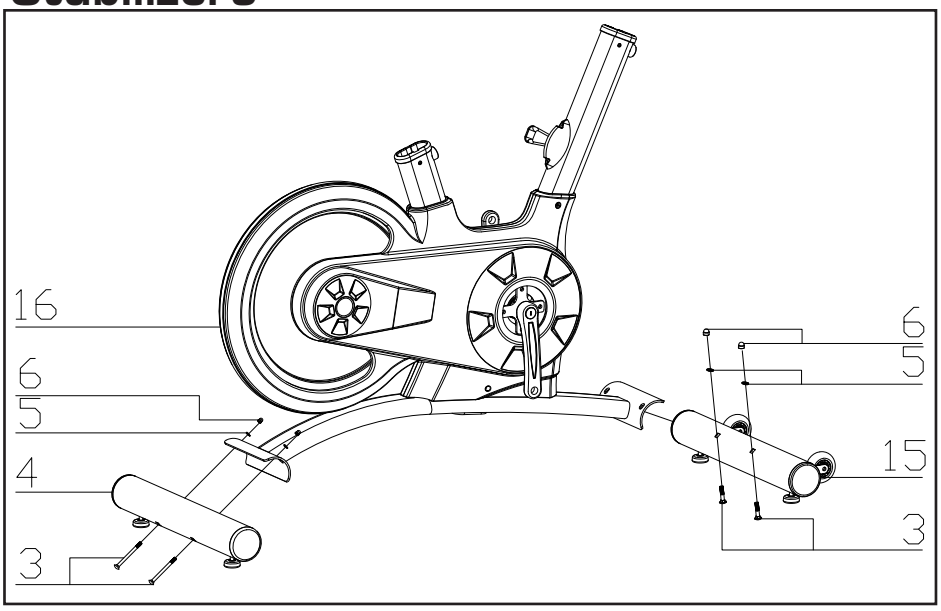

Hardware Step 1

#3. Carriage Bolts (4 pc)
#5. Curved Washers(4 pcs)
#6. Domed Nuts (4 pcs)

1. Attach the front stabilizer (15) to the main frame (16). Secure using two carriage bolts (3), two curved washers (5) and two domed nuts (6).
2. Attach the rear stabilizer (4) to the main frame (16). Secure using two carriage bolts (3), two curved washers (5) and two domed nuts (6).

2 Seat Post

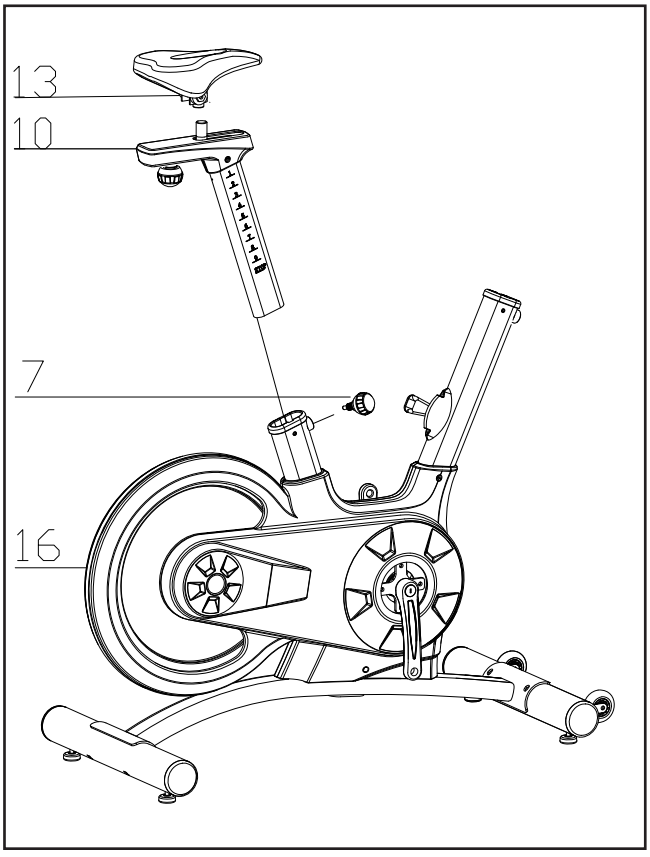

Hardware Step 2

#7. Ball Type Quick Release Knob (1 pcs)

1. Loosen the nuts on the under side of seat (13), place the seat (13) onto seat post and then re-tighten the nuts.
2. Insert the seat post (10) into the Main frame (16). Secure using the ball type quick release knob (7).

   Note: The seat can be horizontally and vertically adjustable after your cycle is fully assembled.

3 Handlebars and Console

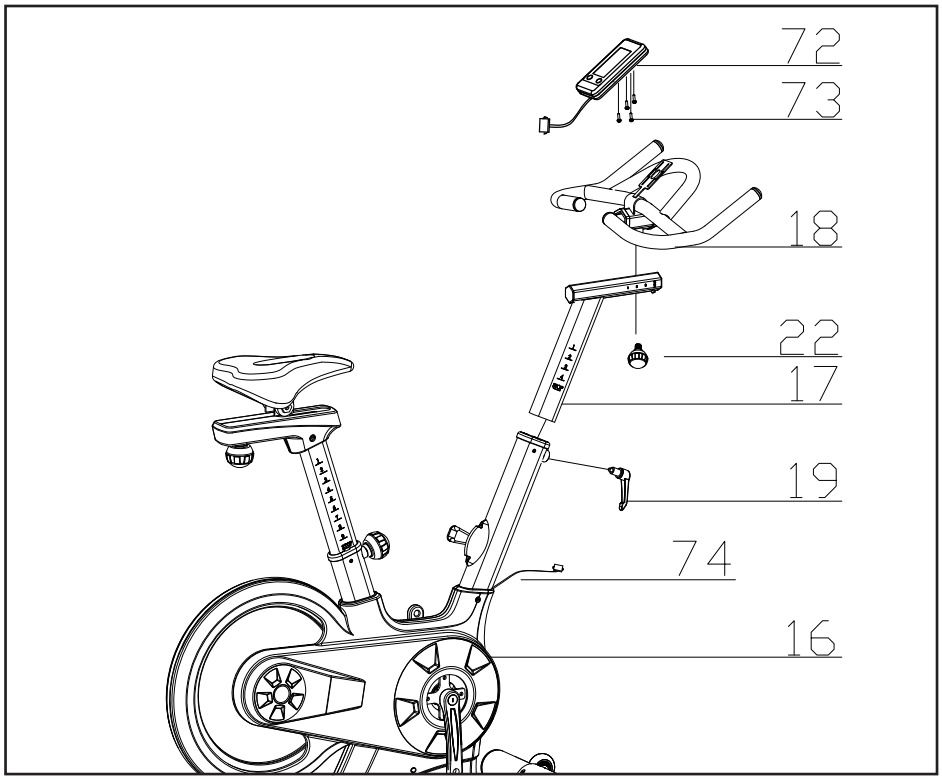

Hardware Step 3

Pre-Assembled on Computer

#73. Screws (4pcs)

#19. L Type Quick Release Knob (1 pc)

#22. Ball Type Quick Release Knob (1 pc)

1. Follow the instructions on page 12 to insert battery into console.
2. Insert the handlebar post (17) to the main frame (16). Secure using an L type quick release knob (19).
3. Attach the handlebar (18) to the handlebar post (17). Secure using a ball type knob (22).
4. Attach computer (72) onto the computer bracket and secure using 4 screws (73) which are pre-assembled on the backside of computer (72). Attach sensor wire (74) to computer (72).

   Note: The handlebar post can be vertically adjustable and the handlebar can be horizontal adjusted after your cycle is fully assembled.

4 Pedals

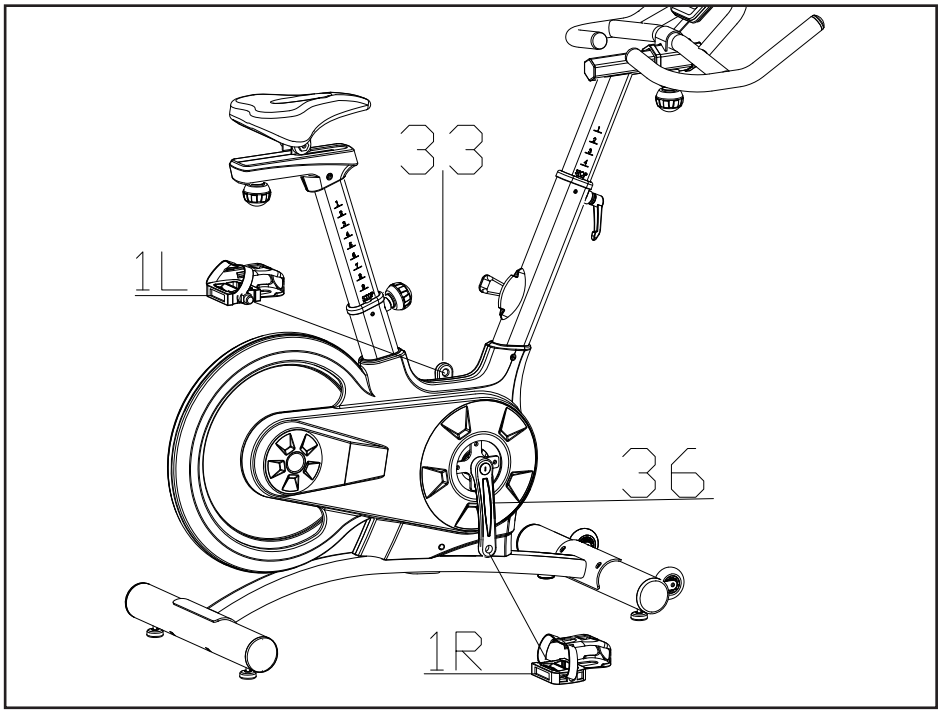

1. Attach the left pedal (1L) to the left crank (33).
2. Attach the right pedal (1R) to the right crank (36).

   Note: The right pedal should be threaded on clockwise and the left pedal on counter-clockwise.

CHECK ALL BOLTS AND NUTS ARE TIGHTENED BEFORE USING THE MACHINE.

Before Using

• Tighten all bolts/nuts securely to complete your installation.

• Adjust all four levelers so your unit sits flat on the ground for a stable ride. If placing on a mat or on carpet, then it may take time for your unit to settle into the floor padding and will not feel as stable as if placed on a hard surface.

• Make sure to tighten both pedals securely to the pedal crank arms as instructed.

• Once proper seat and handlebar height is selected, make sure to tighten securely for a solid feel.

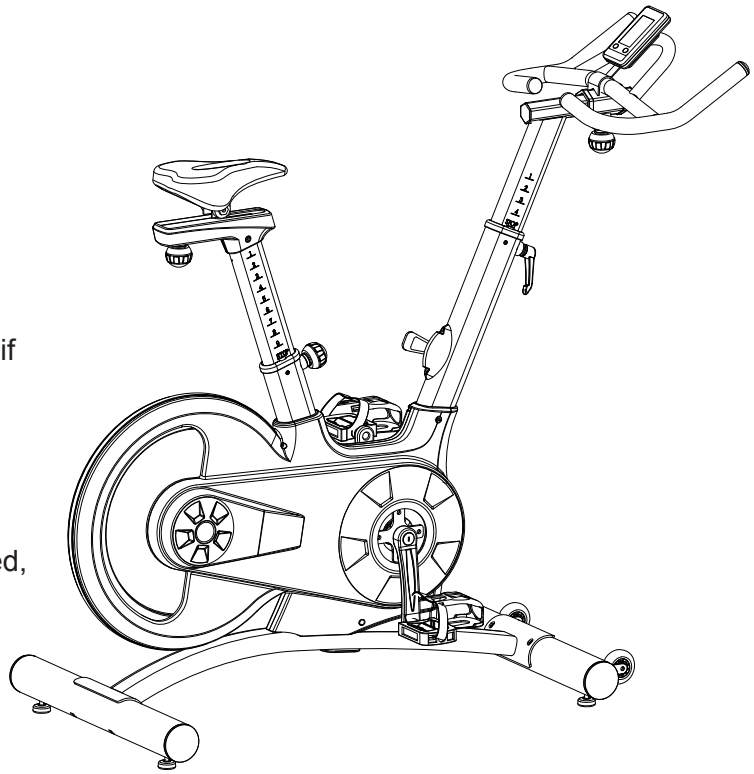

Adjusting the Tension

Push the tension lever (63) up or down to adjust the tension.

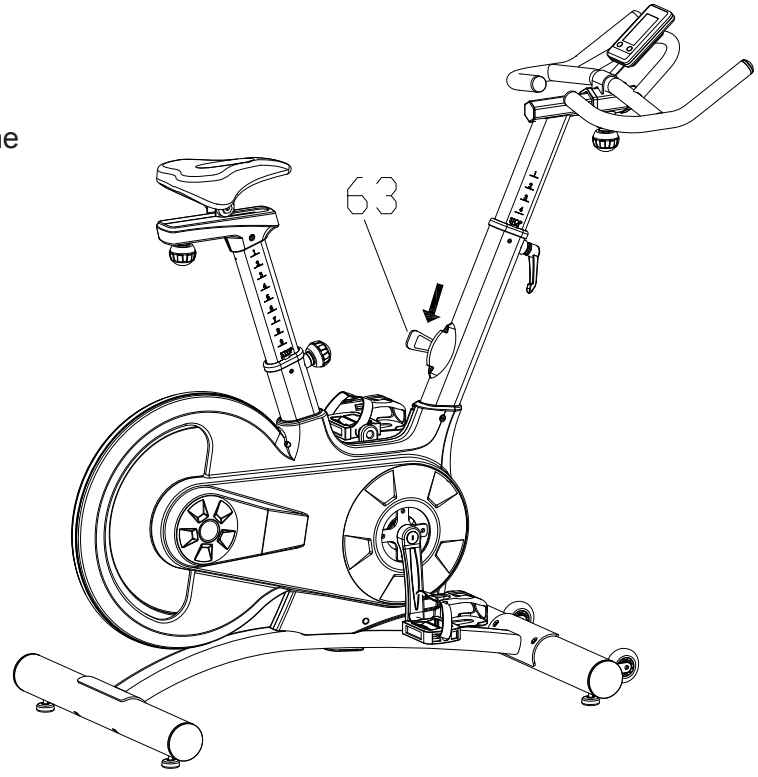

Operation of Your Indoor Cycle

Getting Familiar with the Control Panel

MBX**2500** Console



BUTTON FUCTIONS

MODE/RESET: To confirm all settings.
Press this button and hold for 2 seconds to reset all function figures.
SET: To set up the value of TIME, DISTANCE, CALORIES, PULSE.
You can hold the button to increase the value quickly. (The computer has to be in standby mode.)

DISPLAYS

RPM: Displays the pedaling Rotation Per Minute.
SPEED: Displays the user's exercise speed.
TIME: You can press "SET" button to set target time between 0:00 to 99:00 for count down function. It can be set by the user or automatically count up.
DISTANCE: Your can press "SET" button to set target distance between 0:00 to 99:50 for count down function. It can be set by the user or automatically count up.
CALORIES: You can press "SET" button to set target calories between 0 to 9990 for count down function. It can be set by the user or automatically count up.
PULSE: Displays the user's pulse. User may set the target pulse. When pulse value reaches the targe heart rate, the console will "beep". (Chest strap not included.)

Console Operation

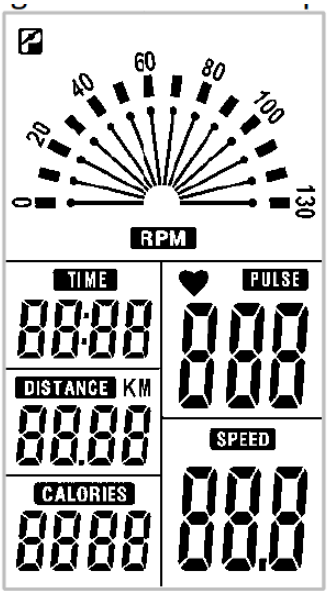

Drawing A

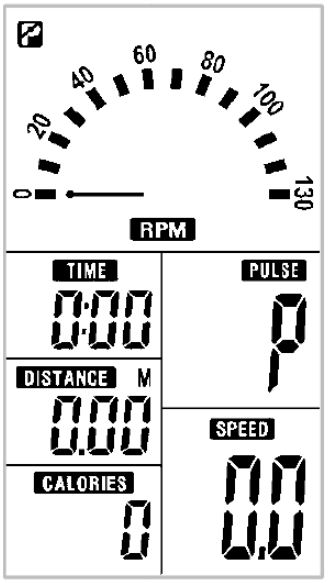

Drawing B

1. Install one CR2032 3V battery, the screen will display “Drawing A” and emit a “beep”. After that, it will load the main menu as seen in “Drawing B”.

2. You can set the value of TIME/DISTANCE/CALORIES/PULSE. In each category, press SET to adjust the values as desired, press MODE to lock in the value.

3. With any signal transmitted to the monitor, the value of TIME, DISTANCE, CALORIES, PULSE will start to count up as Drawing C. When any function has been preset to a target the function will count down from the set value to zero. Once the target reaches zero, the monitor will ”beep” for 8 seconds, and the function will begin counting up from zero if training is continued. Press “MODE” button for confirmation and skip to next set-up.

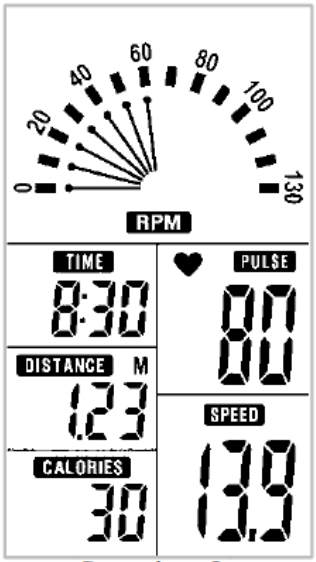

Drawing C

Note:

- If you stop cycling for 4 minutes, the computer will enter sleep mode. You may press any button to have the computer restart working, the original value will be retained.(If re-installing batteries, the original value will reset.)
- If the computer displays abnormally, please re-install battery and try again
- Battery Spec: 3V CR2032 (1PC).

First Time User Instructions

1. Press against the clip on battery cover.
2. Remove the cover.

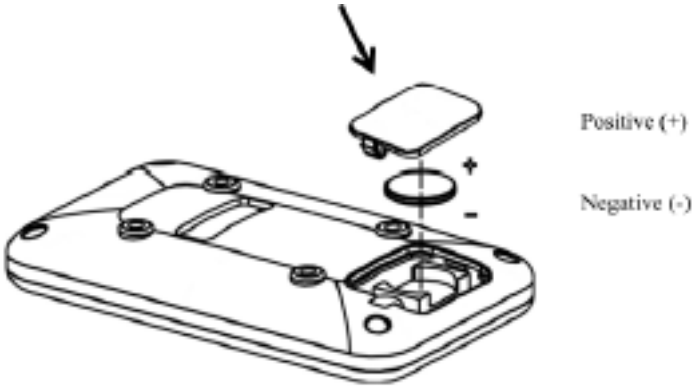

3. Install a new CR2032 battery by tilting the battery slightly to its side and slide it in. (positive+ at facing up, negative faces down)

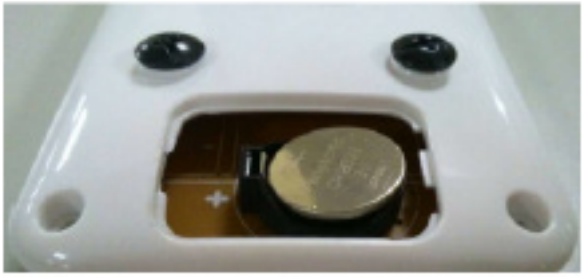

4. To change the battery, gently hold the clip on the side and the battery will pop out. A set of tweezers may be helpful.



First Time User Instructions

Adjusting The Bike For A Proper Fit

Take some time to learn how to properly adjust the bike to your body; it will make your workouts more pleasant and a safer experience too. Riding the bike when it is incorrectly adjusted can result in discomfort and increase your risk of injury.

Adjustment Of Seat Position

Seat Height Adjustment

1. Standing next to the bike, adjust the seat until it is about hip height.
2. Rotate the crank arms until the pedals are in the vertical position: 12 and 6 o'clock.
3. Place your foot in the toe cage of the pedal closest to the floor and mount the bike. Ensure that the ball of your foot is over the center of the pedal. Your leg should be slightly bent at the knee, about 5 degrees.
4. If your leg is too straight or your foot cannot touch the pedal you will need to lower the seat height. If your leg is bent too much, you will need to raise the seat height.
5. Dismount the bike. Then loosen the knob on the seat post and adjust up or down as necessary.
6. When the seat is in the desired position, tighten the quick release to secure the seat post.
7. Note the final position mark on the seat post for future reference.

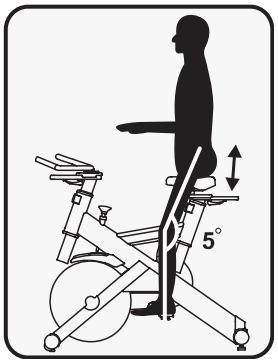

Seat Forward/Back Adjustment

8. Sit on the bike with the crank arms in the 3 and 9 o'clock positions. A proper forward/back position (for road bike training) of the seat is achieved when the small bump at the top of your shin is above the pedal axle.
9. Dismount the bike. Loosen the knob under the seat and slide the seat forward or backward as desired; tighten the knob.

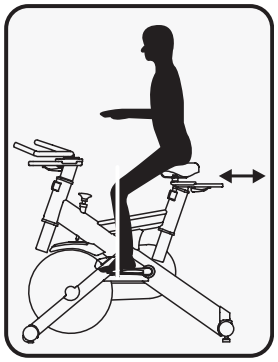

Handle Bar Adjustment

Handlebar Height Adjustment

1. The handlebar height is a matter of preference. Start with a handlebar height that is the same as the seat's height. Adjusting the handlebar higher will give the rider a more upright position; lower will result in a more crouched position.
2. Raise or lower the handlebar by loosening the quick release on the handlebar post and adjust by sliding the handlebar mount up or down as desired. Then tighten the quick release to secure the handlebar post. Note the final position mark on the handlebar post for future reference.

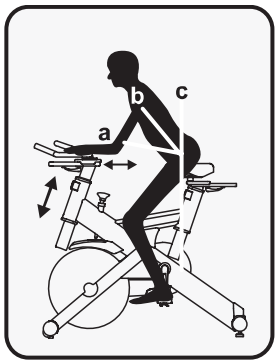

Adjustment of Handlebar's Forward/BackPosition

3. Loosen the quick release under the handlebar and slide the handlebar forward or backward as desired. A suitable forward/back position should allow the rider to comfortably grasp the handlebar with a slight bend at the elbow.
4. Tighten the quick release to secure the handlebar assembly.

Pedal Function

Adjusting The Pedal Straps

Place your feet in between the aluminum surface of the pedal and the nylon foot strap that wraps around it. If the opening is too narrow, depress the spring loaded clasp with one hand and pull on the nylon strap with the other to increase the opening area. If it is too loose or to tighten the strap, depress the spring loaded clasp, then pull on the open end of the nylon strap until the strap is snug around each foot.



**for visual purposes only pedal may not match your machine*

Basic Operation

Now that you have established a proper riding position, take a few minutes to ride the bike and determine that your position is comfortable. Start pedaling at a slow pace with your toes and knees pointed directly forward. Hold the handlebar lightly and in a position that allows your shoulders and upper body to relax. Pedal easily, at a low resistance until you feel confident that you could ride in that position for the duration of your workout.

WARNING!

IF AT ANY TIME DURING YOUR WORKOUT, YOU FEEL CHEST PAIN, EXPERIENCE SEVERE MUSCULAR DISCOMFORT, FEEL FAINT, OR ARE SHORT OF BREATH, STOP EXERCISING AT ONCE. IF THE CONDITION PERSISTS, YOU SHOULD CONSULT YOUR MEDICAL DOCTOR IMMEDIATELY.

1. Pedaling resistance is controlled by the tension lever. Resistance can be changed at any time by adjusting the tension lever: down for more resistance; up for less resistance.
2. To apply the brake, press down on the tension lever to the maximum resistance setting.
3. Before dismounting increase resistance and let flywheel come to a stop.

Troubleshooting

No Display on Console

1. Ensure that the battery is installed properly in the console. If it is, install a fresh battery.

Maintenance Guidelines

Maintenance Schedule

PART	RECOMMENDED ACTION	FREQUENCY	CLEANER	LUBRICANT
Pedals	Ensure that pedals are tight in crank arms; that all screws on pedals are tight; and that the pedal straps are not frayed	Before each use	N/A	N/A
Frame	Wipe down by using a soft damp clean cloth	Daily	Water	N/A
Flywheel	Wipe down by spraying on a rag and applying a light coat to sides of the flywheel	Weekly	WD-40 spray.	N/A
Brake Pad	Inspect for excessive wear or squealing	Weekly	N/A	N/A

1. Use of lubricants or cleaning solutions other than those so specified will result in diminished performance and a shorter life span for that part.

Manufacturer's Limited Warranty

Effective August 21, 2018 - INDOOR CYCLE LIMITED WARRANTY

XTERRA Fitness Inc. warrants all its home use indoor cycle parts for a period of time listed below, from the date of retail sale, as determined by a sales receipt or in the absence of a sales receipt, eighteen (18) months from the original factory shipping date. XTERRA Fitness's responsibilities include providing new or remanufactured parts, at XTERRA Fitness's option, and technical support to our independent dealers and servicing organizations. In the absence of a dealer or service organization, these warranties will be administered by XTERRA Fitness directly to a consumer. The warranty period applies to the following components:

Home Use Limited WARRANTY

Frame	Parts	Labor
Lifetime	1 Year	1 Year

NORMAL RESPONSIBILITIES OF THE CONSUMER

This warranty applies only to products in ordinary household use. The consumer is responsible for the items listed below:

1. The warranty registration card must be completed and returned to the address listed on the card within 10 days of the original purchase to validate the manufacturer's limited warranty or register online at http://www.xterrafitnessstore.com/warrantyreg.html.
2. Proper use of the indoor cycle in accordance with the instructions provided in this manual, including maintenance.
3. Proper connection to a power supply of sufficient voltage, replacement of blown fuses, repair of loose connections or defects in house/facility wiring.
4. Expenses for making the indoor cycle accessible for servicing, including any item that was not part of the indoor cycle at the time it was shipped from the factory.
5. Damages to the indoor cycle finish during shipping, installation or following installation.

EXCLUSIONS

This warranty does not cover the following:

1. CONSEQUENTIAL, COLLATERAL, OR INCIDENTAL DAMAGES SUCH AS PROPERTY DAMAGE AND INCIDENTAL EXPENSES RESULTING FROM ANY BREACH OF THIS WRITTEN OR ANY IMPLIED WARRANTY. Note: Some states do not allow the exclusion or limitation of incidental or consequential damages, so this limitation or exclusion may not apply to you.
2. Service call reimbursement to the consumer. Service call reimbursement to the dealer that does not involve malfunction or defects in workmanship or material, for units that are beyond the warranty period, for units that are beyond the service call reimbursement period, for indoor cycles not requiring component replacement, or indoor cycles not in ordinary household use.
3. Damages caused by services performed by persons other than authorized XTERRA Fitness service companies, use of parts other than original XTERRA Fitness parts, or external causes such as alterations, modifications, abuse, misuse, accident, improper maintenance, inadequate power supply, or acts of God.
4. Products with original serial numbers that have been removed or altered.
5. Products that have been; sold, transferred, bartered, or given to a third party.
6. Products that are used as store display models.
7. Products that do not have a warranty registration on file at XTERRA Fitness, Inc. XTERRA Fitness reserves the right to request proof of purchase if no warranty record exists for the product.
8. Product use in any environment other than a residential setting.
9. THIS WARRANTY IS EXPRESSLY IN LIEU OF ALL OTHER WARRANTIES EXPRESSED OR IMPLIED, INCLUDING THE WARRANTIES OF MERCHANTABILITY AND/OR FITNESS FOR A PARTICULAR PURPOSE.

SERVICE

Keep your bill of sale. Twelve (12) months from the date on the bill of sale or eighteen (18) months from the date of factory shipping as determined by the serial number establishes the warranty period should service be required. If service is performed, it is in your best interest to obtain and keep all receipts. This written warranty gives you specific legal rights. You may also have other rights that vary from state to state. Service under this warranty must be obtained by following these steps, in order:

1. Contact your selling authorized XTERRA Fitness dealer. OR
2. Contact your local authorized XTERRA Fitness service organization.
3. If there is a question as to where to obtain service, contact our service department at (800) 258-8511.
4. XTERRA Fitness's obligation under this warranty is limited to repairing or replacing, at XTERRA Fitness's option, the product through one of our authorized service centers. All repairs must be preauthorized by XTERRA Fitness. If the product is shipped to a service center freight charges to and from the service center will be the customer's responsibility. For replacement parts shipped while the product is under warranty, the customer will be responsible for shipping and handling charges. For in-home service, the customer will be responsible for a trip charge. There will be an additional trip charge if the customer is located over 100 miles from the nearest service center.
5. The owner is responsible for adequate packaging upon return to XTERRA Fitness. XTERRA Fitness is not responsible for damages in shipping. Make all freight damage claims with the appropriate freight carrier. DO NOT SHIP ANY UNIT TO OUR FACTORY WITHOUT A RETURN AUTHORIZATION NUMBER. All units arriving without a return authorization number will be refused.
6. For any further information, or to contact our service department by mail, send your correspondence to:

XTERRA Fitness, Inc.
P.O. Box 2037
Jonesboro, AR 72402-2037

Product features or specifications as described or illustrated are subject to change without notice. All warranties are made by XTERRA Fitness, Inc. This warranty applies only in the 48 contiguous United States. NOTE: This does not apply to Alaska or Hawaii.

3000 Nestle Road Jonesboro, AR 72401 - Phone:870-336-4286 - Fax:870-935-7611

©2018 All RIghts Reserved.