XTERRA® FITNESS

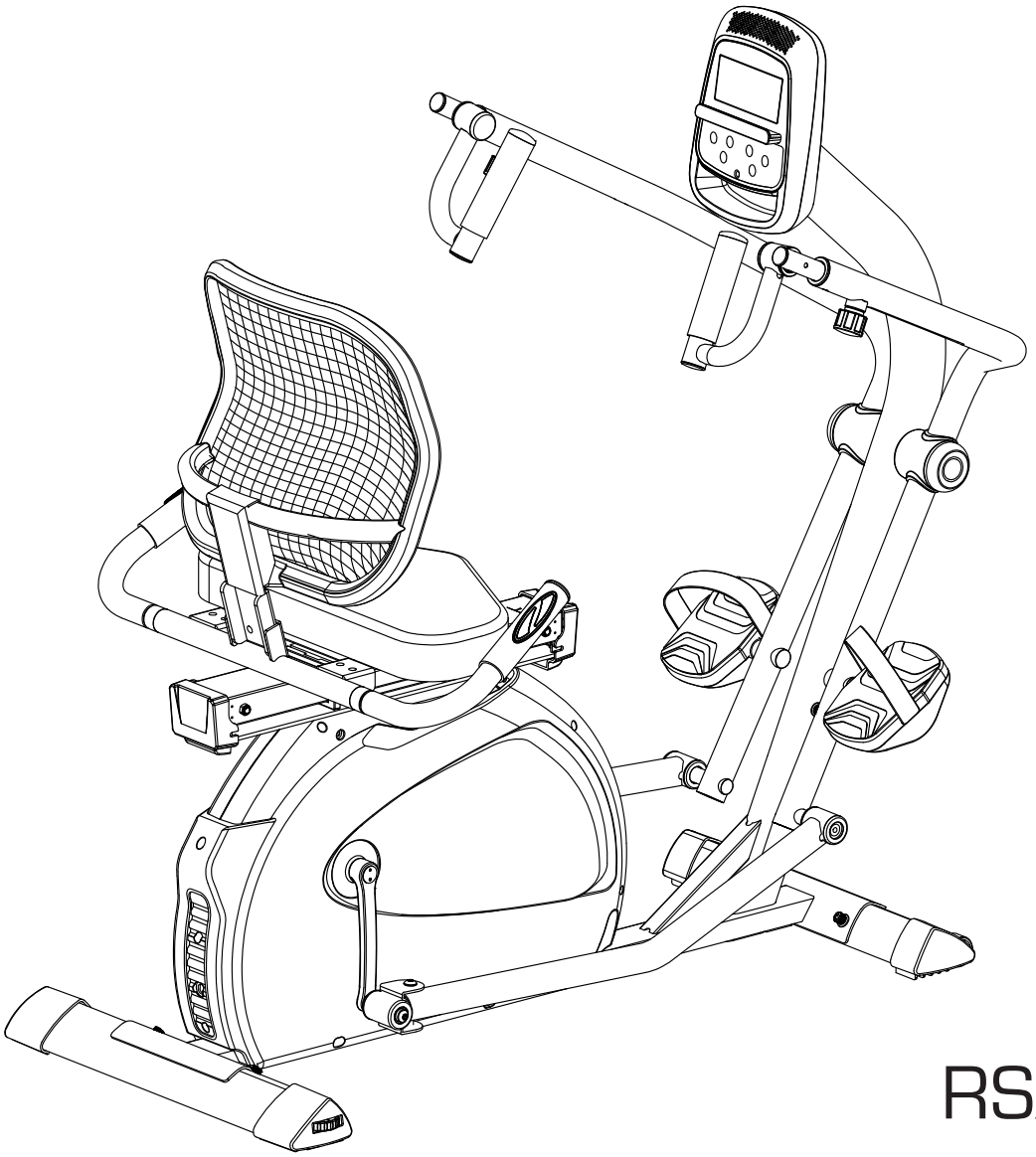

RSX1500
SEATED STEPPER
OWNER'S MANUAL

PLEASE CAREFULLY READ THIS ENTIRE MANUAL BEFORE OPERATING YOUR NEW SEATED STEPPER

Table Of Contents

Product Registration	**1**
Important Safety Instructions	**2**
Important Electrical Instructions	**3**
Important Operation Instructions	**3**
RSX1500 Assembly Instructions	**4**
Operation of Your Console	**14**
General Maintenance	**24**
Manufacturer’s Limited Warranty	**25**

ATTENTION

THIS SEATED STEPPER IS INTENDED FOR **RESIDENTIAL USE ONLY** AND IS WARRANTED FOR THIS APPLICATION. ANY OTHER APPLICATION **VOIDS** THIS WARRANTY IN ITS ENTIRETY.

Congratulations On Your New Seated Stepper and Welcome to the XTERRA Fitness Family!

Thank you for your purchase of this quality Seated Stepper from **XTERRA Fitness**. Your new Seated Stepper has been manufactured by one of the leading fitness manufacturers in the world. **XTERRA Fitness** will do all we can to make your ownership experience as pleasant as possible for many years to come. If you have questions, or if parts are missing or damaged, or you require customer service, call (870)336-4286. Please have your model number and serial number handy when you call.

Please take a moment to record where you purchased your machine, as well as the date of purchase for future reference. We appreciate your confidence in **XTERRA Fitness** and we will always remember that you are the reason that we are in business. Please complete and mail your registration card today and enjoy your new Seated Stepper.

Yours in Health,
XTERRA Fitness

Purchase Location _____

Purchase Date _____

Product Registration

Record Your Serial Number
Please record the Serial Number of this fitness product in the space provided below.

Serial Number _____

Register Your Purchase
The self-addressed product registration card must be completed in full and returned to **XTERRA Fitness**. You can also go to ***www.xterrafitness.com/warrantyreg.html*** to register online.

Important Safety Instructions

When using an electrical appliance, basic precautions should always be followed, including the following:

Read all instructions before using this appliance.

DANGER - To reduce the risk of electric shock:

1. Always unplug this appliance from the electrical outlet immediately after using and before cleaning.

WARNING - To reduce the risk of burns, fire, electric shock, or injury to persons:

1. An appliance should never be left unattended when plugged in. Unplug from outlet when not in use, and before putting on or taking off parts.
2. Do not operate under blanket or pillow. Excessive heating can occur and cause fire, electric shock, or injury to persons.
3. This exercise equipment is not intended for use by persons with reduced physical, sensory or mental capabilities, or lack of experience and knowledge.
4. Use this appliance only for its intended use as described in this manual. Do not use attachments not recommended by the manufacturer.
5. Never operate this appliance if it has a damaged cord or plug, if it is not working properly, if it has been dropped or damaged, or dropped into water. Return the appliance to a service center for examination and repair.
6. Do not carry this appliance by supply cord or use cord as a handle.
7. Keep the cord away from heated surfaces.
8. Never operate the appliance with the air openings blocked. Keep the air openings free of lint, hair, and the like.
9. Never drop or insert any object into any opening.
10. Do not use outdoors.
11. Do not operate where aerosol (spray) products are being used or where oxygen is being administered.
12. Connect this appliance to a properly grounded outlet only.
13. The appliance is intended for household use.



WARNING: This product can expose you to chemicals including Toluene and Acrylamide which are known to the State of California to cause cancer and birth defects or other reproductive harm.
For more information go to www.P65Warnings.ca.gov

Fitness Equipment Safety Instructions

- To disconnect, turn all controls to the off position, then remove the plug from the outlet.
- Do not operate equipment on deeply padded, plush or shag carpet. Damage to both carpet and equipment may result.
- Before beginning this or any exercise program, consult a physician. This is especially important for persons over the age of 35 or persons with pre-existing health conditions.
- Keep hands away from all moving parts.
- The pulse sensors are not medical devices. Various factors, including the user's movement, may affect the accuracy of heart rate readings. The pulse sensors are intended only as exercise aids in determining heart rate trends in general.
- Do not attempt to use your equipment for any purpose other than for the purpose it is intended.
- Wear proper shoes. High heels, dress shoes, sandals or bare feet are not suitable for use on your equipment. Quality athletic shoes are recommended to avoid leg fatigue.
- User Weight Limit: 300 lbs.

Failure to follow all guidelines may compromise the effectiveness of the exercise experience, expose yourself (and possibly others) to injury, and reduce the longevity of the equipment.

SAVE THESE INSTRUCTIONS - THINK SAFETY!

Important Electrical Instructions

WARNING!

- **NEVER** remove any cover without first disconnecting AC power supply.
- If A.C. voltage varies by ten percent (10%) or more, the performance of your Seated Stepper may be affected. Such conditions are not covered under your warranty. If you suspect the voltage is low, contact your local power company or a licensed electrician for proper testing.
- **NEVER** expose this Seated Stepper to rain or moisture. This product is NOT designed for use outdoors, near a pool or spa, or in any other high humidity environment. Maximum environmental ratings are 40-120 degrees Fahrenheit, 95% humidity non-condensing (no water droplets forming on surfaces).

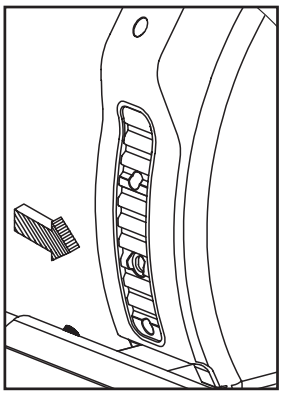

Plug-In

Important Operation Instructions

- **NEVER** operate this Seated Stepper without reading and completely understanding the results of any operational change you request from the computer.
- Understand that changes in resistance do not occur immediately. Set your desired level on the computer console and release the adjustment key. The computer will obey the command gradually.
- **NEVER** use your Seated Stepper during an electrical storm. Surges may occur in your household power supply that could damage Seated Stepper components.
- Use caution while participating in other activities while using your Seated Stepper such as watching television, reading, etc. These distractions may cause you to lose balance, resulting in serious injury.
-

Transportation

The Seated Stepper is equipped with transport wheels, which are engaged when the rear of the Seated Stepper is lifted.

RSX1500 Assembly Pack Checklist

STEP 1

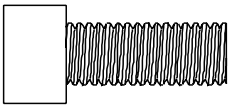

#100. 5/16" × 3/4"
Socket Head Cap Bolt
(9 pcs)



#81. M5 × 12L
Phillips Head Screw (4 pcs)



#98. 5/16" × 1.5T
Split Washer (9 pcs)

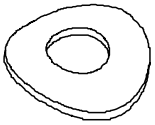

#101. 5/16" × 19 × 1.5T
Curved Washer (1 pc)

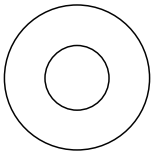

#99. 5/16" × 18 × 1.5T
Flat Washer (8 pcs)

STEP 2



#98. 5/16" × 1.5T
Split Washer (1 pc)

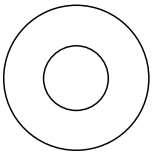

#99. 5/16" × 18 × 1.5T
Flat Washer (1 pc)

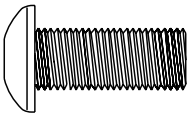

#112. 5/16" × 3/4" Button
Head Socket Bolt (1 pc)

STEP 3



#96. 4 × 12L Sheet
Metal Screw(8 pcs)



#98. 5/16" × 1.5T
Split Washer (1 pc)

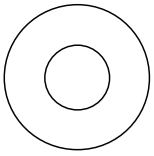

#99. 5/16" × 18 × 1.5T
Flat Washer (1 pc)

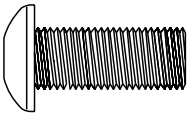

#112. 5/16" × 3/4" Button
Head Socket Bolt (1 pc)

STEP 4



#98. 5/16" × 1.5T
Split Washer (4 pcs)

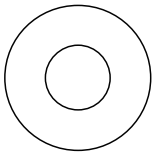

#99. 5/16" × 18 × 1.5T
Flat Washer (4 pc)

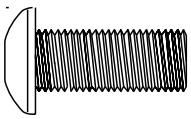

#112. 5/16" × 3/4" Button
Head Socket Bolt (4 pc)

STEP 5

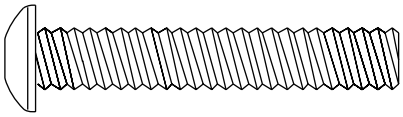

#92. 3/8" × 1-3/4" Button Head Socket Bolt (4 pcs)

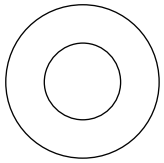

#93. 3/8" × 19 × 1.5T Flat Washer (6 pcs)



#94. 3/8" × 7T Nyloc Nut (6 pcs)

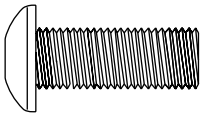

#95. 3/8" × 3/4" Button Head Socket Bolt (2 pcs)

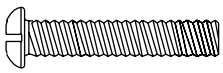

#97. 1/4" × 1" Phillips Head Screw (4 pcs)

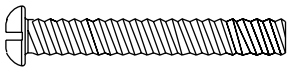

#106. M6 × 35L Phillips Head Screw (4 pcs)

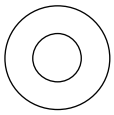

#89. Ø1/4" × 13 × 1.0T Flat Washer (4 pcs)

TOOLS



#129. 14/15m/m Wrench (1 pc)

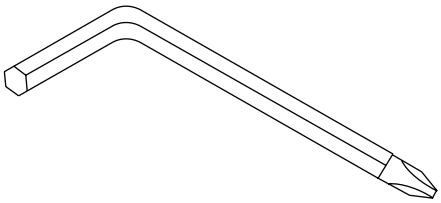

#130. Combination M5 Allen Wrench & Phillips Head Screw Driver(2 pcs)

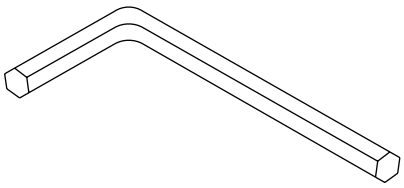

#131. 16 × 27L × 120L L Allen Wrench (1 pc)

RSX1500 Assembly Instructions

1 Console Mast & Stabilizers

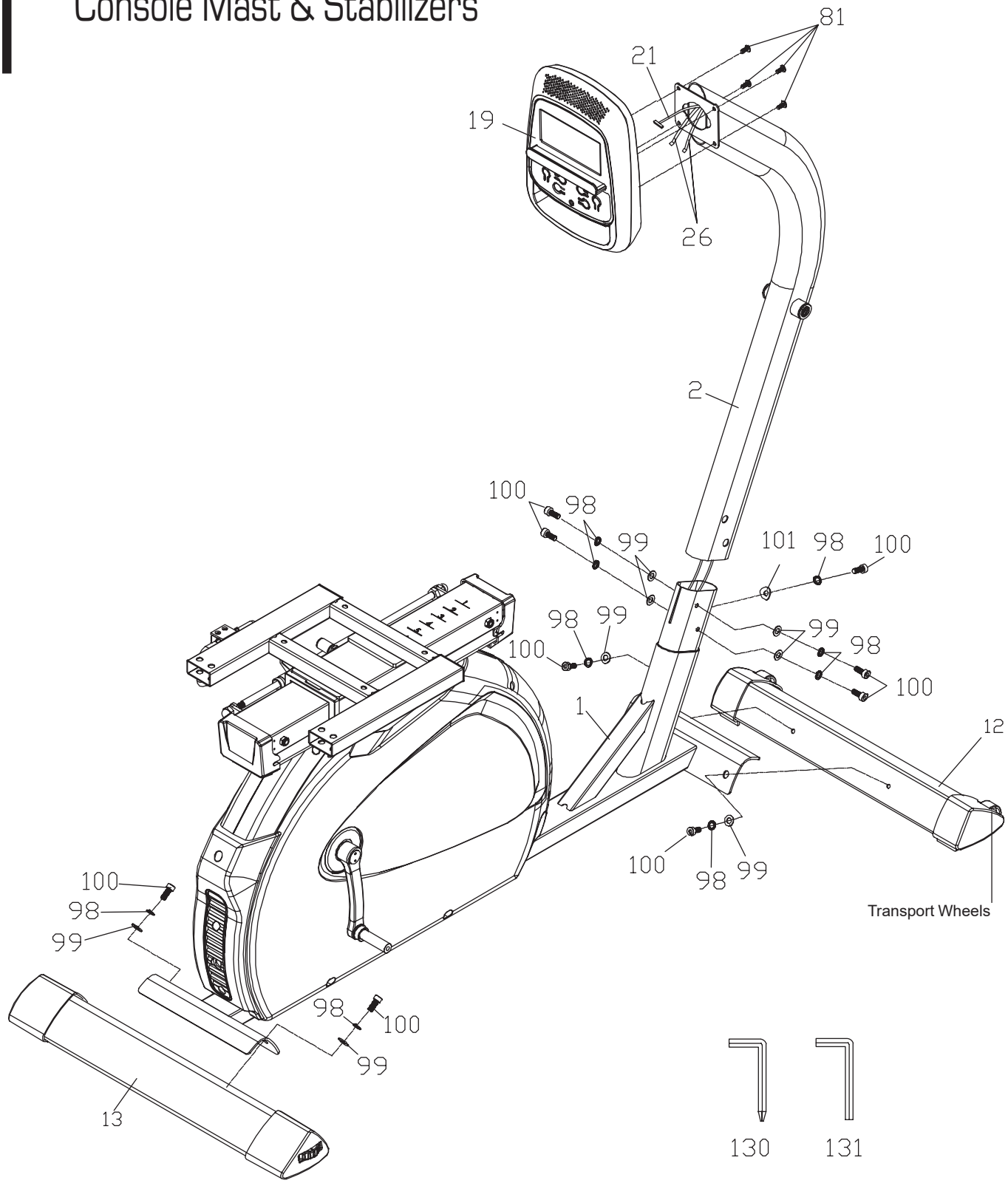

RSX1500 Assembly Instructions

1 Console Mast & Stabilizers

Hardware Step 1

#131. 6x27x120L_L Allen Wrench

#100. 5/16”x 3/4” Socket Head Cap Bolts - 9pcs

#98. 5/16”x1.5T Split Washers - 9pcs

#99. 4 5/16”x18x1.5T Flat Washers - 8pcs

#101. 5/16”x19x1.5T Curved Washer - 1pc

#130. Combination M5 Allen Wrench & Phillips Head Screw Driver

#81. M5x12L Phillips Head Screws - 4pcs

1. Use the Allen Wrench **(#131)** to tighten both front and rear Stabilizers **(#12,13)** with 4 Socket Head Cap Bolts **(#100)**, 4 Split Washers **(#98)** and 4 Flat Washers **(#99)**.

2. Connect the Computer Cable **(#21)** and Handpulse Wire **(#26)** in the Console Mast **(#2)** with the wires from the Main Frame before you slide the Console Mast onto the Main Frame. Be careful not to pinch any of the wires during this step.

3. Insert the Console Mast **(#2)** onto the Main Frame **(#1)** and use the Allen Wrench **(#131)** to tighten with 4 Socket Head Cap Bolts **(#100)**, 4 Flat Washers **(#99)**, 5 Split Washers **(#98)** and 1 Curved Washer **(#101)**.

4. Connect the Console **(#19)** with the Computer Cable **(#21)** and Handpulse Wire **(#26)** to the Console Mast **(#2)** and use Combination M5 Allen Wrench & Phillips Head Screw Driver **(#130)** to secure with 4 Phillips Head Screws **(#81)**.

2 Right Swing Arm

Hardware Step 2

#130. Combination M5 Allen Wrench & Phillips Head Screw Driver

#112. 5/16”x3/4” Button Head Socket Bolt - 1pc

#98. 5/16”x1.5T Split Washer - 1pc

#99. 5/16”x18x1.5T Split Washer - 1pc

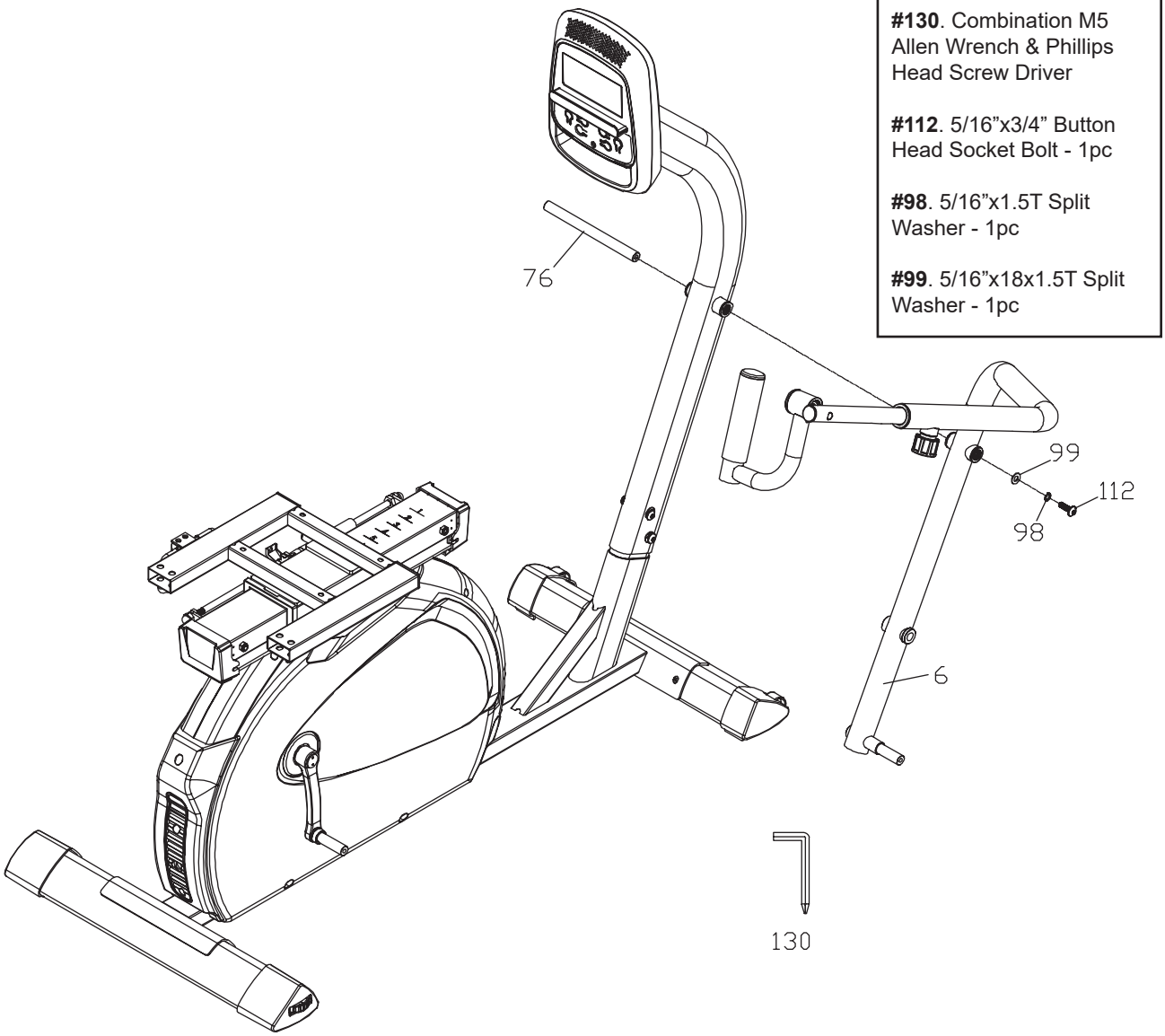

1. Insert the Handgrip Axle **(#76)** to slide through the Lower Handle Bar (R)**(#6)** and use Allen Wrench & Phillips Head Screw Driver **(#130)** to secure with Button Head Socket Bolt **(#112)**, Split Washer **(#98)** and Flat Washer **(#99)**.

3 Upper Swing Arms

Hardware Step 3

#130. Combination M5 Allen Wrench & Phillips Head Screw Driver - 2 pcs

#112. 5/16”x3/4” Button Head Socket Bolt - 1pc

#98. 5/16”x1.5T Split Washer - 1pc

#99. 5/16”x18x1.5T Split Washer - 1pc

#96. 4x12L Sheet Metal Screws - 8pcs

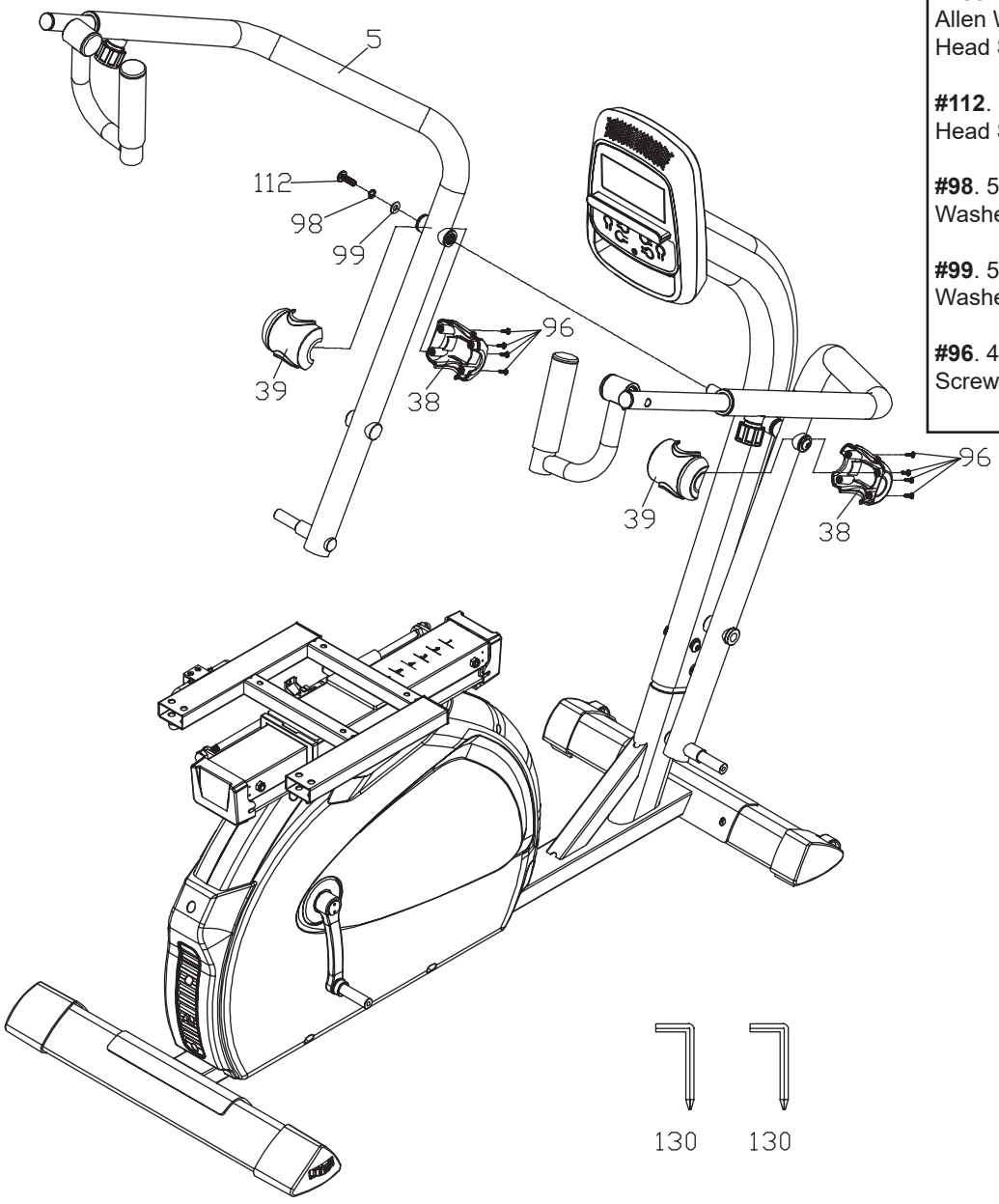

1.
2. Slide Lower Handle Bar (L) **(#5)** through the Handgrip Axle **(#76)** (Refer to assembly step 2) and use 2 Allen Wrench & Phillips Head Screw Drivers **(#130)** to tighten 1 Button Head Socket Bolt **(#112)** and 1 Split Washer **(#98)** and 1 Flat Washer **(#99)** and tighten each other.

3. Install Front Handle Bar Cover **(#38)** and Rear Handle Bar Cover **(#39)** on right and left Lower Handle Bar **(#6)** & **(#5)** with 8 Sheet Metal Screws **(#96)** by using Allen Wrench & Phillips Head Screw Driver **(#130)**.

4 Lower Crank Arms & Pedals

Hardware Step 4

#99. 5/16" × 18 × 1.5T_Flat Washers - 4pcs

#98. 5/16" × 1.5T_ Split Washers -4pcs

#130. Combination M5 Allen Wrench & Phillips Head Screw Driver

#112. 5/16"x3/4" Button Head Socket Bolts - 4pcs

#129. 14.15m/m Wrench

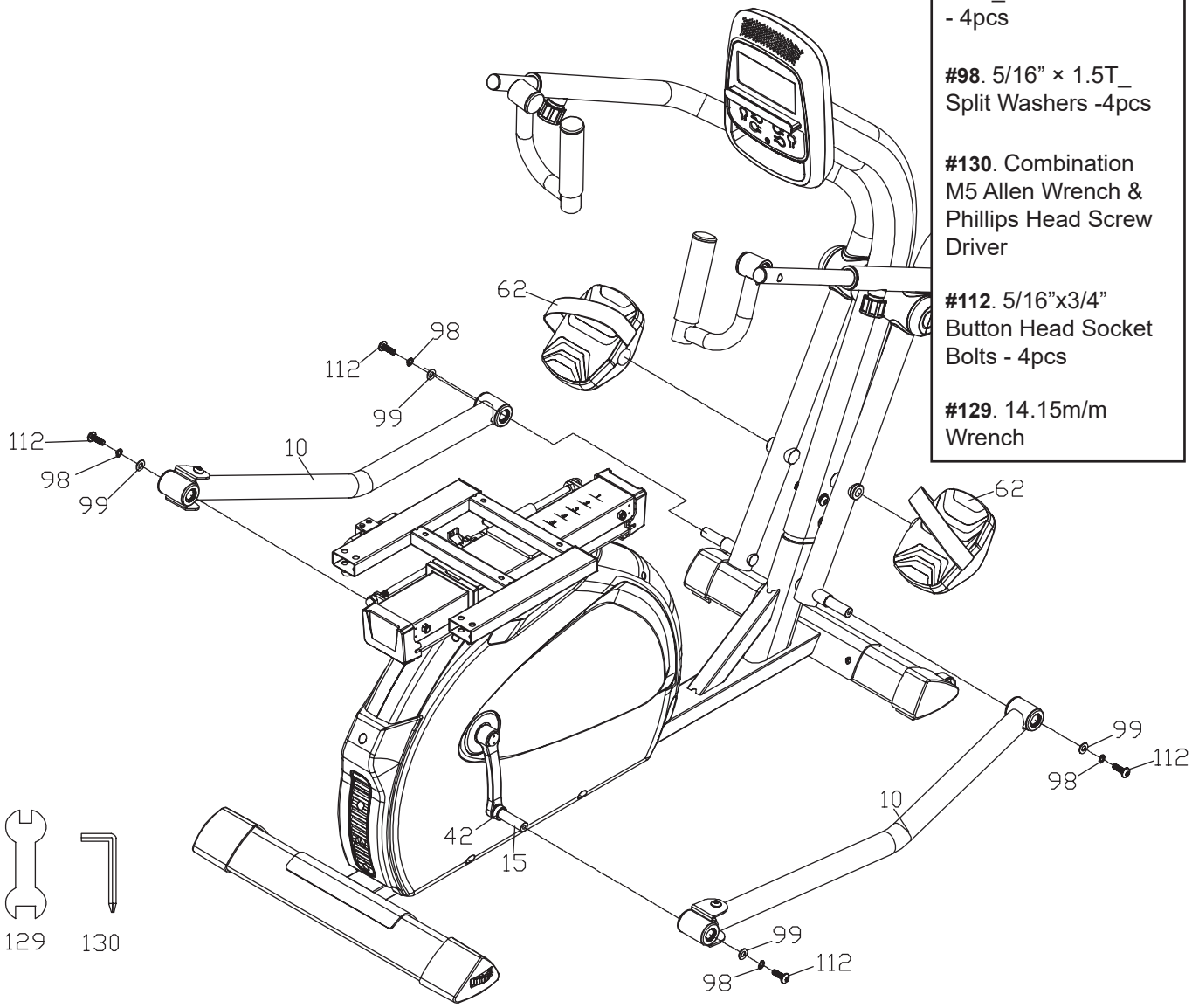

1. Make sure that the Powder metallurgy Bushings **(#42)** are to be mounted on the Crank Arm **(#15)** before assembly.

2. Joint Pedal Bar Assembly **(#10)** with the crank axle and use the Allen Wrench & Phillips Head Screw Driver **(#130)** to secure with 4 Button Head Socket Bolts **(#112)**, 4 Flat Washers **(#99)** and 4 Split Washers **(#98)**.

3. Use Wrench **(#129)** to tighten pedal **(#62)** on the Lower Handle Bar.

5 Sliding Seat & Handbar, and Seatback

Hardware Step 5

#130. Combination M5 Allen Wrench & Phillips Head Screw Driver

#106. M6 × 35L_Phillips Head Screws - 4pcs

#131. 6 × 27L × 120L_L Allen Wrench

#92. 3/8" × 1-3/4" Button Head Socket Bolts - 4pcs

#93. 3/8" × 19 × 1.5T Flat Washers - 6pcs

#129. 14.15m/m Wrench

#94. 3/8" × 7T Nyloc Nuts - 6pcs

#95. 3/8" × 3/4" Button Head Socket Bolts - 2pcs

#97. 1/4" × 1" Phillips Head Screws - 4pcs

#89. Ø1/4" × 13 × 1.0T_ Flat Washers - 4pcs

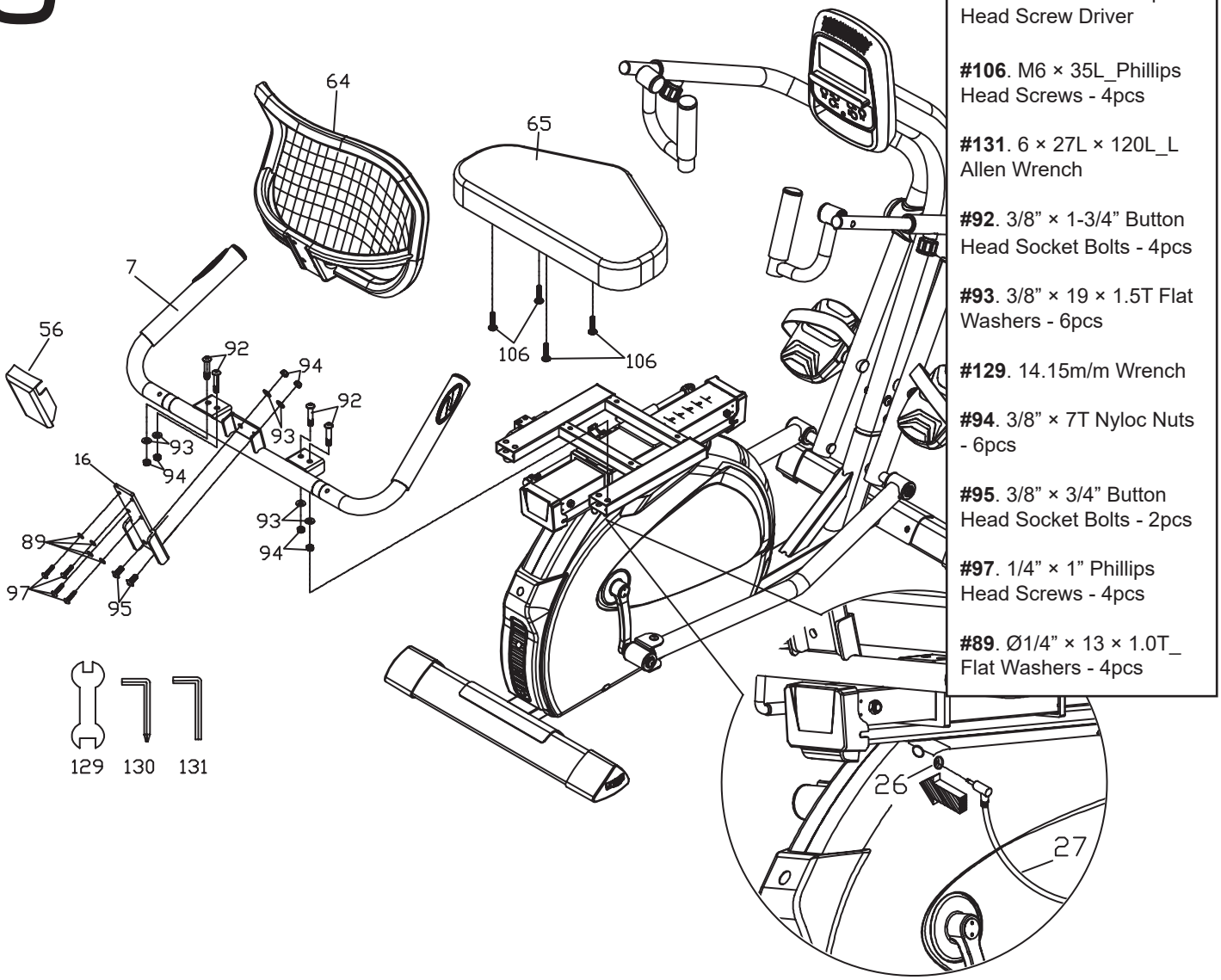

1. Install Seat **(#65)** on Sliding Seat Assembly and use Allen Wrench & Phillips Head Screw Driver **(#130)** to secure with 4 Phillips Head Screws **(#106)**.

2. Install Handle Bar **(#7)** on the Sliding Seat Assembly by using Allen Wrench **(#131)** to tight 4 of Button Head Socket Bolts **(#92)**, going through Handle Bar **(#7)** and 4 Flat Washers **(#93)**, then use Wrench **(#129)** to tighten 4 Nyloc Nuts **(#94)**.

3. Install Seat Back Fixing Plate **(#16)** on the Handle Bar **(#7)** by using Allen Wrench **(#131)** to tight 2 Button Head Socket Bolts **(#95)**, going through Handle Bar **(#7)** and 2 Flat Washers **(#93)**, then use Wrench **(#129)** to tighten 2 Nyloc Nuts **(#94)**.

4. Install Seatback **(#64)** on Seat Back Fixing Plate **(#16)** and use Allen Wrench & Phillips Head Screw Driver **(#130)** to tighten with 4 Phillips Head Screws **(#97)** and 4 Flat Washers **(#89)** to secure Seat Back Fixing Plate **(#16)** then with Seatback Cover **(#56)**.

5. Connect Lower and Upper handpulse wires **(#27,26)**.

6 Seat Adjustment Lever

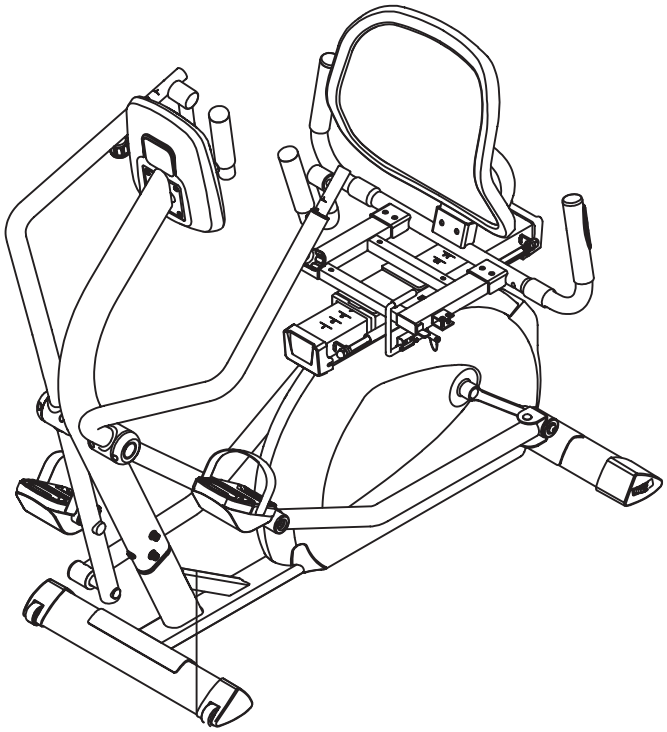

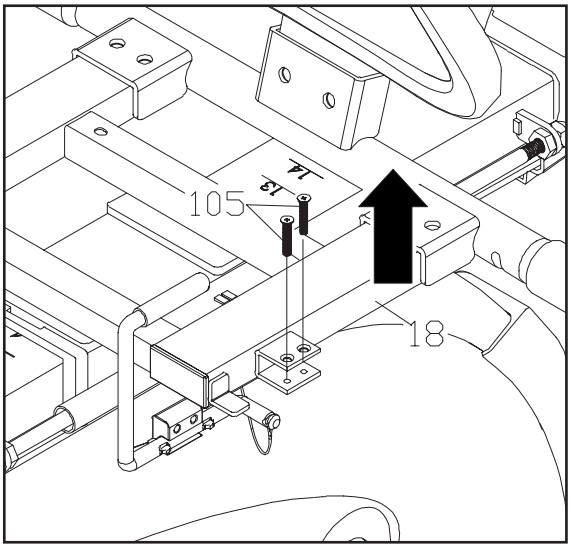

1. Use the Allen Wrench **(#130)** to loosen the Flat Head Socket Screws **(#105)** from Seat Assembly **(#18)**

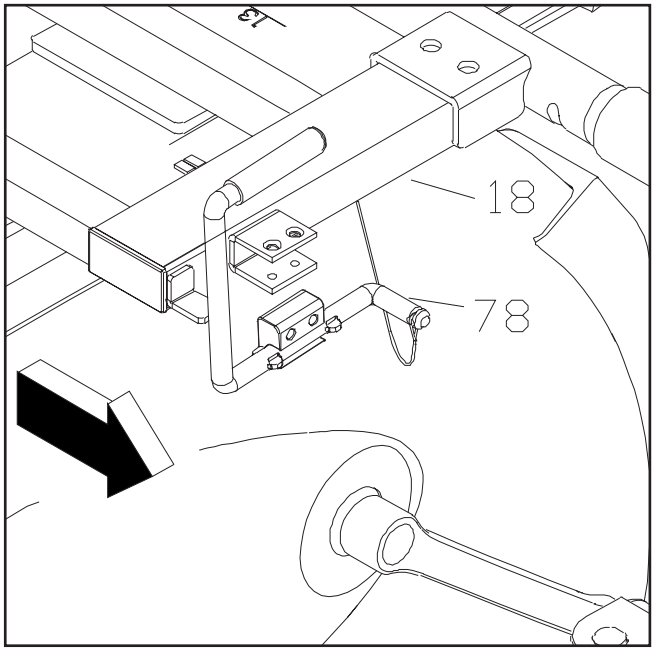

2. Detach Lever **(#78)**from the plastic tie that secures the handle for shipping. Move out the Lever **(#78)** from Seat Assembly **(#18). DO NOT CUT OR DETACH THE METAL WIRE ON THE END OF THE LEVER**

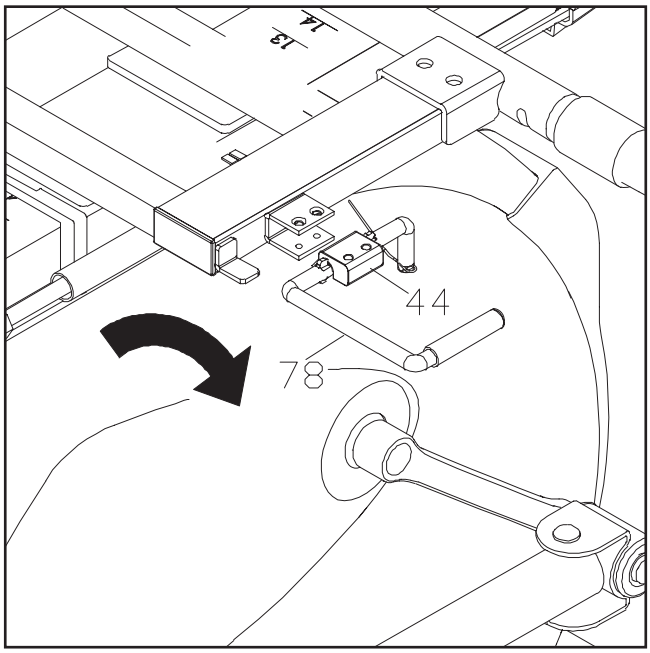

3. Turn the Lever **(#78)** and Lever Anchor **(#44)** to 90 degrees as seen in diagram so the Anchor can slide into Seat Assembly **(#18)** with the holes aligned.

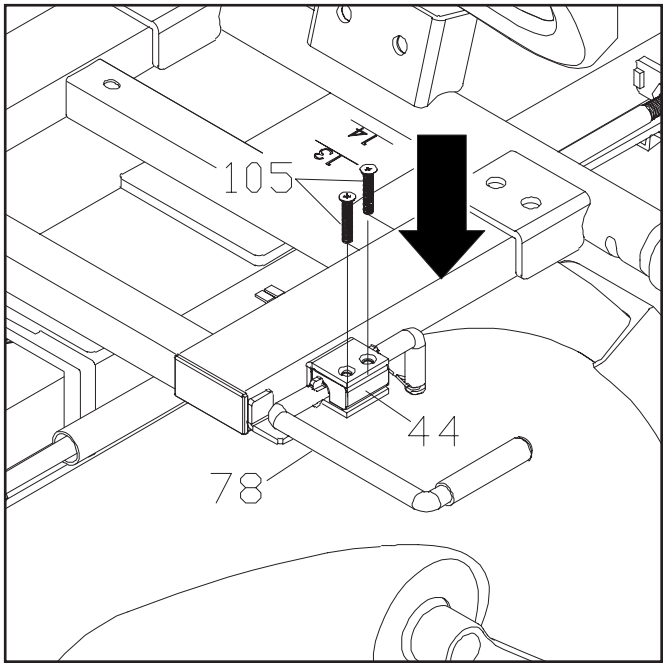

4. Use the Allen Wrench **(#130)** to secure the Flat Head Socket Screws **(#105)**, on the Seat Assembly **(#18).**

Operation of Your Console

RSX1500 Console



Key Functions

START / STOP:
1. Starts & Pauses workouts.
2. Starts body fat measurement.
3. Holding key for 3 seconds will reset all functions and values to zero.

DOWN: Decreases value of selected workout parameter: TIME, DISTANCE, etc. During the workout it will decrease the resistance load.

UP: Increases value of selected workout parameter. During the workout it will increase the resistance load.

ENTER: To input desired value or work out mode.

RECOVERY: Press to enter into heart rate Recovery function. Only works when the computer is receiving a heart rate value. Recovery is an indication of Fitness Level. It is a one minute measurement taken immediately after and exercise session and provides a score from 1 to 6. A score of 1 is an indication of a high level of fitness and a score of 6 indicates poor condition.

MODE: Press to switch display from RPM to SPEED, ODO to DIST, WATT to CALORIES.

Functions

SPEED: Displays current training speed. Maximum speed is 99.9 KM/H or MILE/H.

RPM: Displays current pedal rotations per minute.

TIME: Accumulates workout time from 00:00 to 99:59. Or users can preset the target time desired.

DIST: Accumulates the workout distance form 0.00 up to 999.9 KM or Mile. Or users can preset the target distance they want to reach.

ODO: Displays the total accumulated distance from 0.0 to 999.9KM or Mile.

CAL: Accumulates the calories burned from 0 to 9999. Or users can preset the target Calories they want to burn.

WATT: Displays current watt.

HEART RATE: Displays the current heart rate in beats per minute.

TARGET H. R.: Users can preset their Target Heart Rate.

PROGRAM: There are 24 different programs to choose for training.

LEVEL: The programs have 24 levels of work displayed in 8 bars in each column. Each column represents 1 minute workout (Unless time is changed to a new value for count down) and each bar represents 3 levels of work.

Music: There is an audio-input port on the top of the monitor. Users can connect an MP3, smart phone or other audio source to the port.

Workout Selection

After power-up, use the UP / DOWN keys to select a workout program then pressing ENTER. There are 6 basic workout programs: **Manual, Pre-Programs, Watt Program, Target Heart Rate program, Heart Rate Control Program and User Program**.

Workout Parameter

(TIME/DISTANCE/CALORIES/WATT/TARGET HEART RATE)

Setting Workout Parameters

After selecting desired workout program (Manual, Pre-set Programs, Watt Program, Target Heart Rate, Heart Rate Control and User Program) you may pre-set several workout parameters for desired results.

Note: *Some parameters are not adjustable in certain programs. Time and Distance can not be set up in the same workout.*

Once a program has been selected pressing ENTER will make “Time” parameter flash. Using UP / DOWN KEY you may set the desired time value. Press ENTER KEY to input value. Flashing prompt will move to the next parameter. Continue use of UP / DOWN KEY. Press START / STOP to start workout.

More About Workout Parameters

Time	0:00 - 99:00	00:00	± 1:00	1. When display is 0:00, Time will count up. 2. When Time is 1:00 - 99:00, it will count down to 0:00.
Distance	0.00 - 999.0	0.00	± 1.0	1. When display is 0.00, Distance will count up. 2. When Distance is 1.0 - 990.0, it will count down to 0.00.
Calories	0 - 9995	0	± 5	1. When display is 0, Calories will count up. 2. When Calories is 5 - 9995, it will count down to 0.
Watt	40-250	100	± 5	User can set watt value only in Watt control program.
Age	10-99	30	± 1	Target Heart Rate will be based on Age. When heart rate exceeds Target Heart Rate, the number of heart rate will flash.
Pulse	60-220	90	± 1	Setting Paramters for Target Heart Rate.

Program Operation

Manual Program

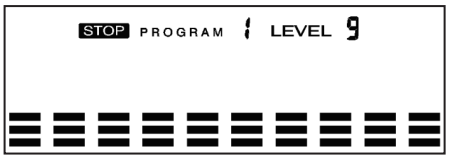

Setting Parameters for the Manual Program
Select **Manual** using UP / DOWN KEY then press the ENTER KEY. The first parameter, “Time” will flash so value can be adjusted using UP / DOWN KEY. Press ENTER KEY to save value & move to next parameter to be adjusted. ****(If user sets up the target time to work-out then the next parameter of Distance can not be adjusted)** Continue through all desired parameters, pressing START / STOP to start workout.

***Note:** When any One of the workout parameters counts down to zero the console emits a beep sound and the workout stops automatically. Press START KEY to continue the workout to reach the unfinished workout goals set.*

Pre-Set Programs

There are 12 pre-set program profiles ready for use ROLLING, VALLEY, FAT BURN, RAMP, STEPS, OBSTACLE, INTERVALS, PLATEAU, CLIMBING, OFF ROAD, HILL, FASTTREK. All program profiles have 24 levels of resistance. See page 18 to view the profiles.

Setting Parameters for Pre-Set Programs

Select one of pre-set programs using UP / DOWN KEY then pressing ENTER KEY.
The first parameter, “Time” will flash indicating the value can be adjusted using UP / DOWN KEY. Press ENTER KEY to save value & move to next parameter to be adjusted. Continue through all desired parameters, pressing START / STOP to start workout.

Workout in any Pre-Set Program

Users can exercise at different levels of intensity in different intervals as the profiles flash. Users may adjust the resistance level using the UP / DOWN keys during the workout.

Note: *If user sets up the target time to workout then the next parameter of Distance can not be adjusted. When any one of the workout parameters counts down to zero the console emits a beep sound and the workout stops automatically. Press START KEY to continue the workout to reach the unfinished workout goals set.*

Pre-Set Programs (P2 - P13)

ROLLING



VALLEY



FAT BURN

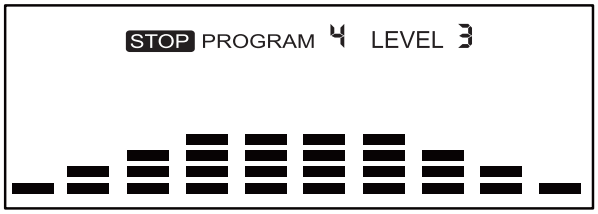

RAMP

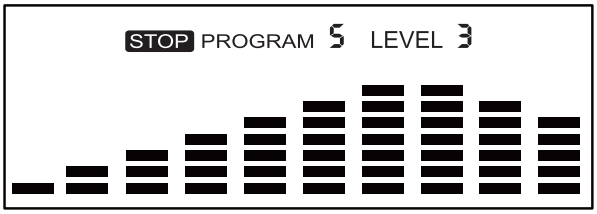

STEPS

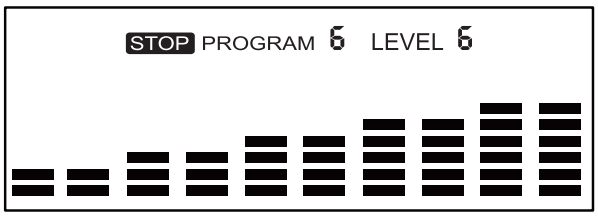

OBSTACLE

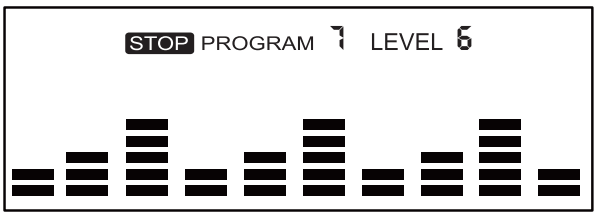

INTERVALS

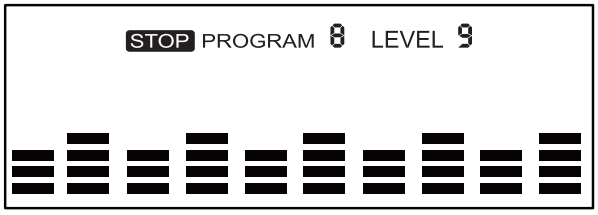

PLATEAU

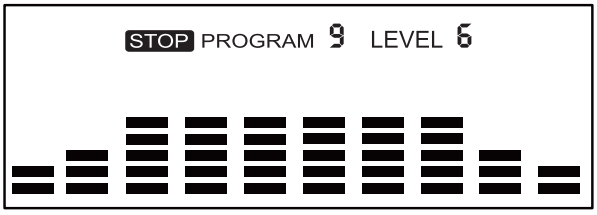

CLIMBING

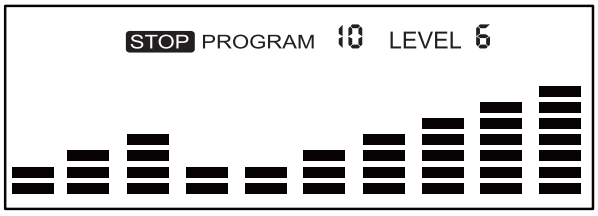

OFF ROAD

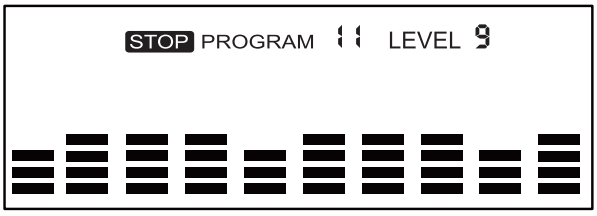

HILL

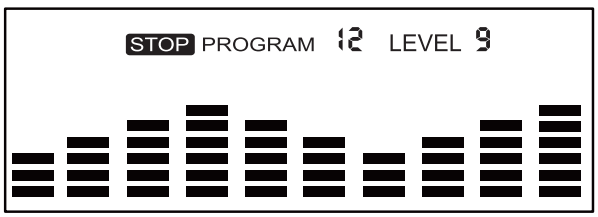

FARTLEK

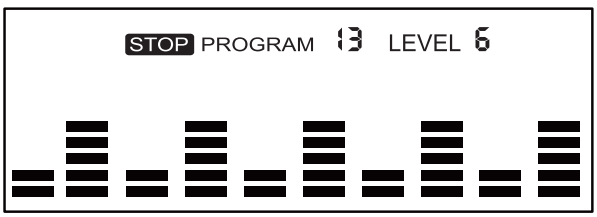

Watt Control Program



Setting Parameters for Watt Control Programs
Select **Watt Control Program** using UP / DOWN KEY then press ENTER KEY. The first parameter “Time” will flash indicating the value can be adjusted using UP / DOWN KEY. Press ENTER KEY to save value & move to next parameter to be adjusted. ****(If user sets up the target time to workout, then the next parameter of Distance can not be adjusted)** Continue through all desired parameters, pressing START / STOP to start workout.

Note: *When any one of the workout parameters counts down to zero the console emits a beep sound and the workout stops automatically. Press START KEY to continue the workout to reach the unfinished workout goals set. The computer will adjust the resistance load automatically depending on the speed to maintain a constant watt value. User can use UP / DOWN key to adjust the watt value during workout.*

Body Fat Program

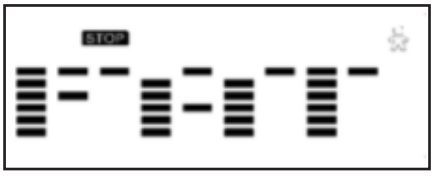

Setting Data for Body Fat
Select **BODY FAT Measurement** *using UP OR DOWN KEY then press ENTER. “Male” will flash and can be adjusted using UP / DOWN KEY, press ENTER to save gender and move to next parameter to be adjusted. User height will show flashing as 5’ 8” and can be adjusted using UP / DOWN KEY, press ENTER to save height and move to next parameter to be adjusted. User weight of 165 lb will flash and can be adjusted to use UP / DOWN KEY, press ENTER to save weight and move to next parameter to be adjusted. User age of 30 will flash and can be adjusted using UP / DOWN KEY, press ENTER to save all values.*
Press START / STOP to start measurement, grasp hand pulse grips and do not pedal (remain still).

After 15 seconds the display will show Body Fat %, BMR, BMI & BODY TYPE.
NOTE: Body Types:
There are 9 body types according to the FAT% calculated.
Type 1 is from 5% to 9%
Type 2 is from 10% to 14%
Type 3 is from 15% to 19%
Type 4 is from 20% to 24%
Type 5 is from 25% to 29%
Type 6 is from 30% to 34%
Type 7 is from 35% to 39%
Type 8 is from 40% to 44%
Type 9 is from 45% to 50%
BMR*: Basal Metabolism Ratio* **BMI***: Body Mass Index*
Press START / STOP KEY to return to the main Display.

Target Heart Rate Program



Setting Parameters for the Target Heart Rate Program
Select **Target HR** using UP / DOWN KEY then press ENTER KEY. The first parameter “Time” will flash indicating the value can be adjusted using UP / DOWN KEY. Press ENTER KEY to save value & move to next parameter to be adjusted. ****(If user sets up the target time to workout, then the next parameter of Distance can not be adjusted)** Continue through all desired parameters, pressing START / STOP to start workout.

Note: *If your Pulse measurement is above or below (± 5) the TARGET HR setting, the computer will adjust the resistance load automatically; it will check approximately every 10 seconds. If the heart rate signal disappears, the computer will keep the resistance load constant for 60 seconds then it will decrease the resistance load 1 level every 10s.*

When any one of the workout parameters counts down to zero the console emits a beep sound and the workout stops automatically. Press START KEY to continue the workout to reach the unfinished workout goals set.

Heart Rate Control Program

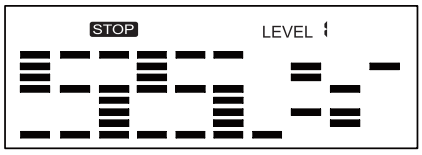

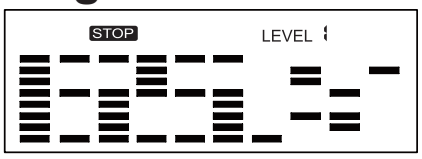

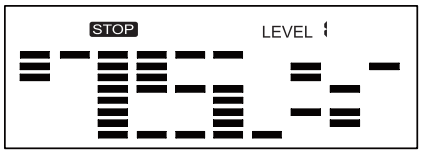

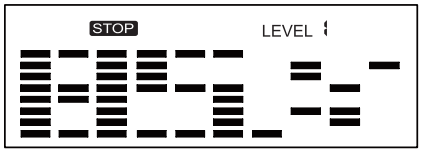

There are 4 selections for target pulse:
HRC- 55% TARGET H.R= 55% of (220-AGE)
HRC - 65% TARGET H.R= 65% of (220-AGE)
HRC - 75% TARGET H.R= 75% of (220-AGE)
HRC - 85% TARGET H.R= 85% of (220-AGE)

Setting Parameters for Heart Rate Control Programs
Select one of the **Heart Rate Control Programs** using UP / DOWN KEY then press ENTER KEY. The first parameter “Time” will flash indicating the value can be adjusted using UP / DOWN KEY. Press ENTER KEY to save value & move to next parameter to be adjusted. ****(If user sets up the target time to workout, then the next parameter of Distance can not be adjusted)** Continue through all desired parameters, pressing START / STOP to start workout.

Note: *If your Pulse measurement is above or below (± 5) the Target HR setting, the computer will adjust the resistance load automatically; it will check approximately every 10 seconds. If the heart rate signal disappears, the computer will keep the resistance load constant for 60 seconds then it will decrease the resistance load 1 level every 10 seconds.*

When any one of the workout parameters counts down to zero the console emits a beep sound and the workout stops automatically. Press START KEY to continue the workout to reach the unfinished workout goals set.

User Program

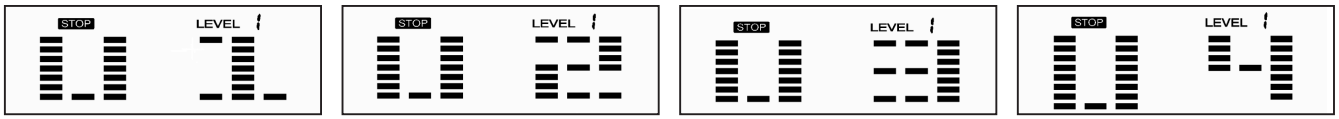

Four User Programs allow the user to create their own personal programs.

Setting Parameters for User Programs
Select “User” using UP / DOWN KEY then press ENTER KEY. The first parameter, “Time” will flash indicating the value can be adjusted using UP / DOWN KEY. Press ENTER KEY to save value & move to next parameter to be adjusted. ****(If user sets up the target time to workout, then the next parameter of Distance can not be adjusted)** Continue through all desired parameters.

After completing parameter set up, row 1 of the profile will be flashing. Use UP / DOWN KEY to adjust level then press ENTER until finished (10 times total). Press START / STOP to start workout.

Note: *When any one of the workout parameters counts down to zero the console emits a beep sound and the workout stops automatically. Press START KEY to continue the workout to reach the unfinished workout goals set.*

Heart Rate

The old motto, “no pain, no gain”, is a myth that has been overpowered by the benefits of exercising comfortably. A great deal of this success has been promoted by the use of heart rate monitors. With the proper use of a heart rate monitor, many people find that their usual choice of exercise intensity was either too high or too low and exercise is much more enjoyable by maintaining their heart rate in the desired benefit range.

To determine the benefit range in which you wish to train, you must first determine your predicted Maximum Heart Rate. This can be accomplished by using the following formula: 220 minus your age. This will give you the predicted Maximum Heart Rate (MHR) for someone of your age. To determine the effective heart rate range for specific goals you simply calculate a percentage of your MHR. Your heart rate training zone is 50% to 90% of your maximum heart rate. 60% of your MHR is the zone that burns fat, while 80% is for strengthening the cardio vascular system. This 60% to 80% is the zone to stay in for maximum benefit.

For someone who is 40 years old their predicted target heart rate zone is calculated:

220 – 40 = 180 (maximum heart rate)
180 x .6 = 108 beats per minute
(60% of maximum)
180 X .8 = 144 beats per minute
(80% of maximum)

So for a 40 year old the training zone would be 108 to 144 beats per minute.

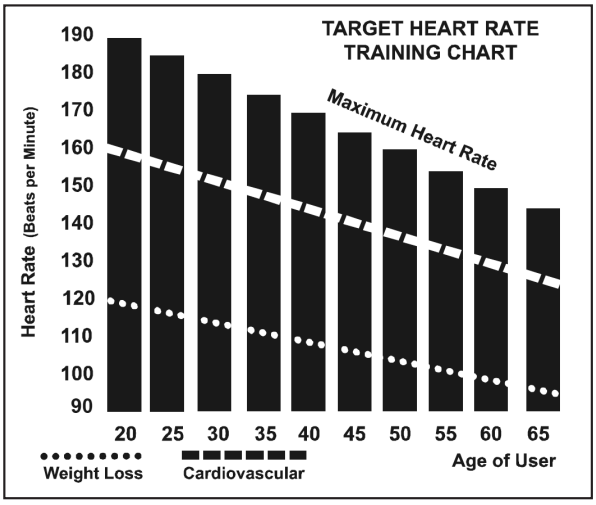

The two most popular reasons for, or goals, of exercise are cardiovascular fitness (training for the heart and lungs) and weight control. The black columns on the chart above represent the MHR for a person whose age is listed at the bottom of each column. The training heart rate, for either cardiovascular fitness or weight loss, is represented by two different lines that cut diagonally through the chart. A definition of the lines’ goal is in the bottom left-hand corner of the chart. If your goal is cardiovascular fitness or if it is weight loss, it can be achieved by training at 80% or 60%, respectively, of your MHR on a schedule approved by your physician. Consult your physician before participating in any exercise program.

Rate of Perceived Exertion

Heart rate is important but listening to your body also has a lot of advantages. There are more variables involved in how hard you should workout than just heart rate. Your stress level, physical health, emotional health, temperature, humidity, the time of day, the last time you ate and what you ate all contribute to the intensity at which you should workout. If you listen to your body it will tell you all of these things.

The rate of perceived exertion (RPE), also known as the Borg scale, was developed by Swedish physiologist G.A.V. Borg. This scale rates exercise intensity from 6 to 20 depending upon how you feel or the perception of your effort.

The scale is as follows:

Rating Perception of Effort

6 Minimal
7 Very,very light
8 Very,very light +
9 Very light
10 Very light +
11 Fairly light
12 Comfortable
13 Somewhat hard
14 Somewhat hard +
15 Hard
16 Hard +
17 Very hard
18 Very hard +
19 Very,very hard
20 Maximal

You can get an approximate heart rate level for each rating by simply adding a zero to each rating. For example a rating of 12 will result in an approximate heart rate of 120 beats per minute. Your RPE will vary depending on the factors discussed earlier. If your body is strong and rested, you will feel strong and your pace will feel comfortable. When your body is in this condition, you are able to train harder and the RPE will support this. If you are feeling tired and sluggish, it is because your body needs a break. In this condition, your pace will feel difficult. Again, this will show up in your RPE and you will train at the proper level for that day.

General Maintenance

1. Wipe down all areas in the sweat path with a damp cloth after each workout.
2. If a squeak, thump, clicking or rough feeling develops, the main cause is most likely one of two reasons:
   i. The hardware was not sufficiently tightened during assembly. All bolts that were installed during assembly need to be tightened as much as possible. It may be necessary to use a larger wrench than the one provided if you cannot tighten the bolts sufficiently. The majority of calls to the service department for noise issues can be traced to loose hardware or the rear rails being dirty.
   ii. Dirt build-up on the rear rails and polyurethane wheels are also a source of noise. Noise from build-up on the rails can cause a thumping sound that you would swear is coming from inside the main body of the machine because noise travels and is amplified in the tubing of the frame. Clean the rails and wheels with a lint free cloth and rubbing alcohol. Stubborn build-up can be removed with your thumbnail or a non-metallic scraper, like the back edge of a plastic knife. After cleaning, apply a small amount of lubricant on the rails with your fingers or a lint free cloth. You only need a thin coat of lubrication, wipe off any excess.
3. If squeaks or other noises persist, check that the unit is properly leveled before calling the service department.

Seated Stepper Noises

Your new Seated Stepper is engineered and manufactured to the strictest industry standards and tolerances. All Seated Stepper trainers, no matter who the manufacturer, have a multitude of moving linkages and parts. Be aware that even with the tightest mechanical tolerances there still could be a slight amount of play between some parts. This inherent play can result in slight noises during use such as clicks and small thumps. Please expect that the Seated Stepper will not be completely silent.

Manufacturer's Limited Warranty

Effective August 21, 2018- Seated Stepper LIMITED WARRANTY

XTERRA Fitness Inc. warrants all its home use Seated Stepper parts for a period of time listed below, from the date of retail sale, as determined by a sales receipt or in the absence of a sales receipt, eighteen (18) months from the original factory shipping date. XTERRA Fitness' responsibilities include providing new or remanufactured parts, at XTERRA Fitness' option, and technical support to our independent dealers and servicing organizations. In the absence of a dealer or service organization, these warranties will be administered by XTERRA Fitness directly to a consumer. The warranty period applies to the following components:

Home Use Limited Warranty		
Frame & Brake	Parts	Labor
Lifetime	3 Years	1 Year

NORMAL RESPONSIBILITIES OF THE CONSUMER

This warranty applies only to products in ordinary household use. The consumer is responsible for the items listed below:

1. The warranty registration card must be completed and returned to the address listed on the card within 10 days of the original purchase to validate the manufacturer's limited warranty or register online at the XTERRA Fitness website.
2. Proper use of the Seated Stepper in accordance with the instructions provided in this manual, including maintenance.
3. Proper connection to a power supply of sufficient voltage, replacement of blown fuses, repair of loose connections or defects in house/facility wiring.
4. Expenses for making the Seated Stepper accessible for servicing, including any item that was not part of the Seated Stepper at the time it was shipped from the factory.
5. Damages to the Seated Stepper finish during shipping, installation or following installation.

EXCLUSIONS

This warranty does not cover the following:

1. CONSEQUENTIAL, COLLATERAL, OR INCIDENTAL DAMAGES SUCH AS PROPERTY DAMAGE AND INCIDENTAL EXPENSES RESULTING FROM ANY BREACH OF THIS WRITTEN OR ANY IMPLIED WARRANTY. Note: Some states do not allow the exclusion or limitation of incidental or consequential damages, so this limitation or exclusion may not apply to you.
2. Service call reimbursement to the consumer. Service call reimbursement to the dealer that does not involve malfunction or defects in workmanship or material, for units that are beyond the warranty period, for units that are beyond the service call reimbursement period, for Seated Steppers not requiring component replacement, or Seated Steppers not in ordinary household use.
3. Damages caused by services performed by persons other than authorized XTERRA Fitness service companies, use of parts other than original XTERRA Fitness parts, or external causes such as alterations, modifications, abuse, misuse, accident, improper maintenance, inadequate power supply, or acts of God.
4. Products with original serial numbers that have been removed or altered.
5. Products that have been; sold, transferred, bartered, or given to a third party.
6. Products that are used as store display models.
7. Products that do not have a warranty registration on file at XTERRA Fitness Inc. XTERRA Fitness reserves the right to request proof of purchase if no warranty record exists for the product.
8. Product use in any environment other than a residential setting.
9. THIS WARRANTY IS EXPRESSLY IN LIEU OF ALL OTHER WARRANTIES EXPRESSED OR IMPLIED, INCLUDING THE WARRANTIES OF MERCHANTABILITY AND/OR FITNESS FOR A PARTICULAR PURPOSE.

SERVICE

Keep your bill of sale. Twelve (12) months from the date on the bill of sale or eighteen (18) months from the date of factory shipping as determined by the serial number establishes the warranty period should service be required. If service is performed, it is in your best interest to obtain and keep all receipts. This written warranty gives you specific legal rights. You may also have other rights that vary from state to state. Service under this warranty must be obtained by following these steps, in order:

1. Contact your selling authorized XTERRA Fitness dealer. OR
2. Contact your local authorized XTERRA Fitness service organization.
3. If there is a question as to where to obtain service, contact our service department at (870)336-4286.
4. XTERRA Fitness' obligation under this warranty is limited to repairing or replacing, at XTERRA Fitness' option, the product through one of our authorized service centers. All repairs must be preauthorized by XTERRA Fitness. If the product is shipped to a service center freight charges to and from the service center will be the customer's responsibility. For replacement parts shipped while the product is under warranty, the customer will be responsible for shipping and handling charges. For in-home service, the customer will be responsible for a trip charge. There will be an additional trip charge if the customer is located over 100 miles from the nearest service center.
5. The owner is responsible for adequate packaging upon return to XTERRA Fitness. XTERRA Fitness is not responsible for damages in shipping. Make all freight damage claims with the appropriate freight carrier. DO NOT SHIP ANY UNIT TO OUR FACTORY WITHOUT A RETURN AUTHORIZATION NUMBER. All units arriving without a return authorization number will be refused.
6. For any further information, or to contact our service department by mail, send your correspondence to:

XTERRA Fitness, Inc.
P.O. Box 2037
Jonesboro, AR 72402-2037

Product features or specifications as described or illustrated are subject to change without notice. All warranties are made by XTERRA Fitness, Inc. This warranty applies only in the 48 contiguous United States. NOTE: This does not include Alaska or Hawaii.

3000 Nestle Road Jonesboro, AR 72401 - Phone:870-336-4286 - Fax:870-935-7611

©2021 All Rights Reserved.