XTERRA® FITNESS



SB150 RECUMBENT BIKE
OWNER'S MANUAL

SB150_115314_OM_20240426

PLEASE CAREFULLY READ THIS ENTIRE MANUAL BEFORE OPERATING YOUR NEW RECUMBENT

Congratulations On Your New Bike and Welcome to the XTERRA Fitness Family!

Thank you for your purchase of this quality fitness bike from **XTERRA Fitness**. Your new fitness bike has been manufactured by one of the leading fitness manufacturers in the world. **XTERRA Fitness** will do all we can to make your ownership experience as pleasant as possible for many years to come. If you have questions, or if parts are missing or damaged, or you require customer service, call (870) 333-5500. Please have your model number and serial number handy when you call.

Please take a moment to record where you purchased your machine, as well as the date of purchase for future reference. We appreciate your confidence in **XTERRA Fitness** and we will always remember that you are the reason that we are in business. Please complete and mail your registration card today and enjoy your new fitness bike.

Yours in Health,
XTERRA Fitness

Table Of Contents

Product Registration	**1**
Important Safety Instructions	**2**
SB150 Assembly Instructions	**4**
Operation of Your Console	**13**
Program Operation	**16**
Manufacturer’s Limited Warranty	**25**

Product Registration

Purchase Location _____

Purchase Date _____

Record Your Serial Number
Please record the Serial Number of this fitness product
in the space provided below.

Serial Number _____

Register Your Purchase
The self-addressed product registration card must be completed in full and returned to **XTERRA Fitness**. You can also go to ***www.xterrafitness.com/warranty*** to register online.

ATTENTION

THIS FITNESS BIKE IS INTENDED FOR **RESIDENTIAL USE ONLY** AND IS WARRANTED FOR THE APPLICATION. ANY OTHER APPLICATION **VOIDS** THIS WARRANTY IN ITS ENTIRETY.

Power

This product uses an external power supply. The adapter must be plugged into the power jack, located on the front of the unit near the stabilizer tube. Next, plug the adapter into the appropriate wall outlet. When not in use, it is recommended to unplug the power supply from the wall outlet.

IMPORTANT: If the product has been exposed to cold temperatures, allow the product sit in room temperature to warm up before plugging in the adapter. Failure to do so may result in damage to the display or electronic components.

IMPORTANT: Do not operate the product if the power supply, its plug, or its cord has been damaged.

Important Safety Instructions

When using an electrical appliance, basic precautions should always be followed, including the following:

Read all instructions before using this appliance.

DANGER - To reduce the risk of electric shock:

1. Always unplug this appliance from the electrical outlet immediately after using and before cleaning.

WARNING - To reduce the risk of burns, fire electric shock, or injury to persons:

1. An appliance should never be left unattended when plugged in. Unplug from outlet when not in use, and before putting on or taking off parts.
2. Do not operate under blanket or pillow. Excessive heating can occur and cause fire, electric shock, or injury to persons.
3. This exercise equipment is not intended for use by persons with reduced physical, sensory or mental capabilities, or lack of experience and knowledge.
4. Use this appliance only for its intended use as described in this manual. Do not use attachments not recommended by the manufacturer.
5. Never operate this appliance if it has a damaged cord or plug, if it is not working properly, if it has been dropped or damaged, or dropped into water. Return the appliance to a service center for examination and repair.
6. Do not carry this appliance by supply cord or use cord as a handle.
7. Keep the cord away from heated surfaces.
8. Never operate the appliance with the air openings blocked. Keep the air openings free of lint, hair, and the like.
9. Never drop or insert any object into any opening.
10. Do not use outdoors.
11. Do not operate where aerosol (spray) products are being use or where oxygen is being administered.
12. Connect this appliance to a properly grounded outlet only.
13. The appliance is intended for household use.


WARNING: This product can expose you to chemicals including Toluene and Acrylamide which are known to the State of California to cause cancer and birth defects or other reproductive harm.
For more information go to www.P65Warnings.ca.gov

Fitness Equipment Safety Instructions

- To disconnect, turn all controls to the off position, then remove the plug from the outlet.
- Do not operate equipment on deeply padded, plush or shag carpet. Damage to both carpet and equipment may result.
- Before beginning this or any exercise program, consult a physician. This is especially important for persons over the age of 35 or persons with pre-existing health conditions.
- Keep hands away from all moving parts.
- The pulse sensors are not medical devices. Various factors, including the user's movement, may affect the accuracy of heart rate readings. The pulse sensors are intended only as exercise aids in determining heart rate trends in general.
- Do not attempt to use your equipment for any purpose other than for the purpose it is intended.
- Wear proper shoes. High heels, dress shoes, sandals or bare feet are not suitable for use on your equipment. Quality athletic shoes are recommended to avoid leg fatigue.

Failure to follow all guidelines may compromise the effectiveness of the exercise experience, expose yourself (and possibly others) to injury, and reduce the longevity of the equipment.

SAVE THESE INSTRUCTIONS - THINK SAFETY!
CAUTION!! Please be careful when unpacking the carton.

Before you begin

Thank you for selecting our revolutionary Xterra SB150 Fitness Bike. Cycling is an effective exercise for increasing cardiovascular fitness, building endurance, and toning the body. Our fitness bike provides an impressive selection of features designed to make your workouts at home more effective and enjoyable.

For your benefit, read this manual carefully before you use you fitness bike. To help us assist you, note the product model number and serial number before contacting us. Before reading further, please familiarize yourself with the parts that are labeled in the drawing below

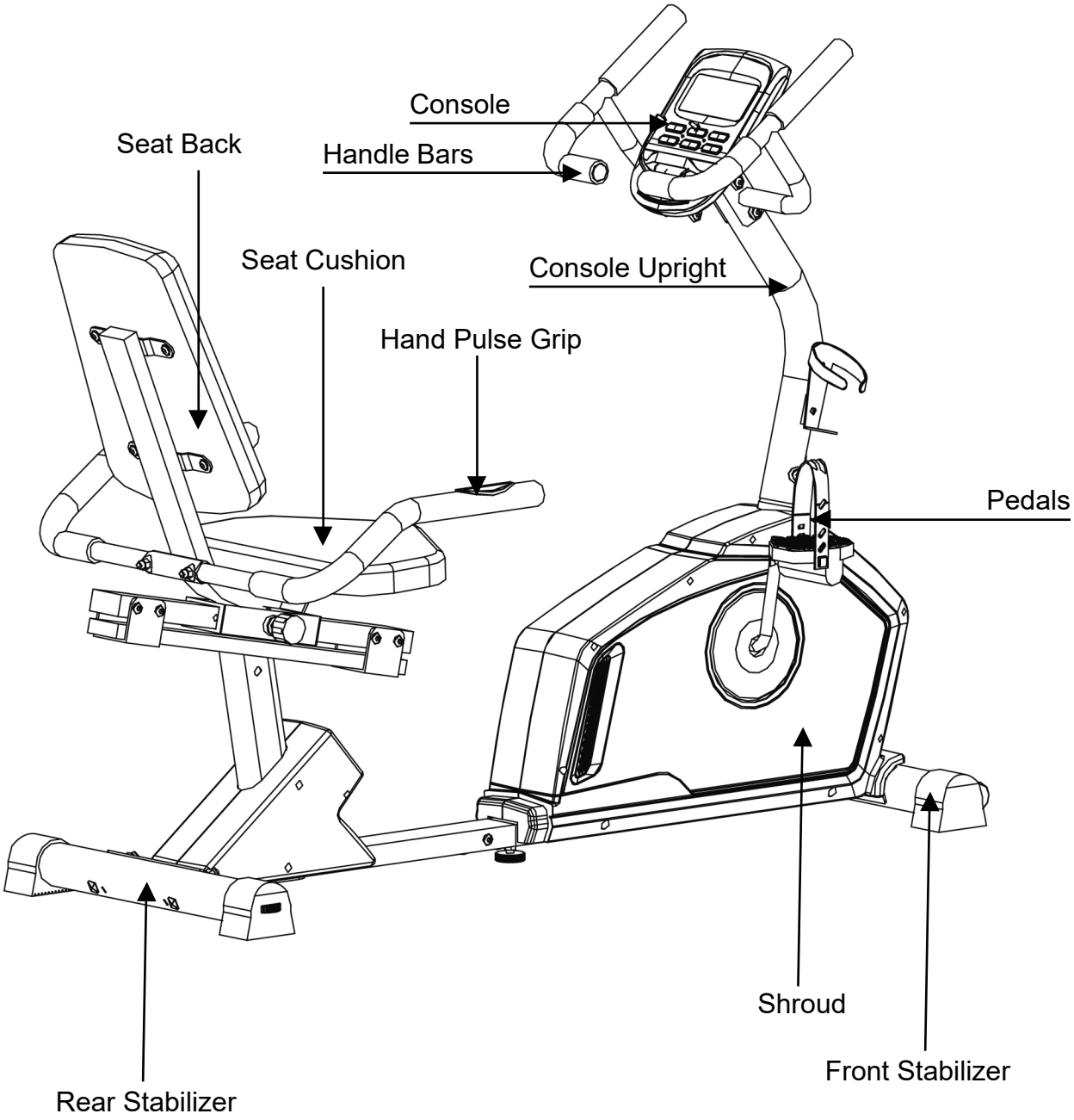

SB150 Pre-Assembly Check List

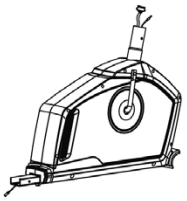

NO:1



NO:9

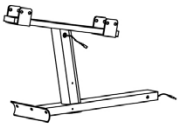

NO:40



NO:43



NO:3



NO:6

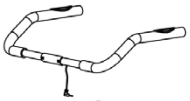

NO:13



NO:10



NO:45

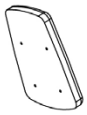

NO:44

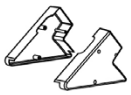

NO:47/48



NO:12



NO:11



NO:37



NO:36



NO:41



NO:46

PART NO.	DESCRIPTION	Q'TY
1	Main frame	1
3	Front Stabilizer	1
6	Rear Stabilizer	1
9	Front post	1
10	Computer	1
11	Stationary handlebar R	1
12	Stationary handlebar L	1
13	Rear handlebar	1
36/37	Right/Left pedal	1/1
40	Support Tube	1
41	Sliding Tube	1
43	Seat support bracket	1
44	Back cushion	1
45	Seat cusjion	1
46	Bottle holder	1
47/48	Left/Right rear support cover	1/1
	Hardware bag	1
	Manual	1

SB150 Assembly Pack Checklist

Part No.	Description	Q'ty
2	Allen Screw M8*75	2
4	Spring Washer	2
5	Curved Washer Φ8*Φ20*1.5	12
21	Allen Screw M8*16	30
23	Carriage Bolt M10*75	2
24	Curved Washer Φ10*Φ22*1.5	2
28	Carriage Bolt M8*40	2
29	Domed Nut M8	2
31	Domed Nut M10	2
38	Flat Washer Φ17*Φ8.5	6
39	Leveling Pad	1
42	Quick Release Knob	1
88	Box Wrench	1
89	Allen Key 6mm	1

Note: Above parts are all the parts needed to assemble this machine. Before you start to assemble, please check the hardware packing to make sure they are included.

SB150 Assembly Instructions

1 Front Stabilizer

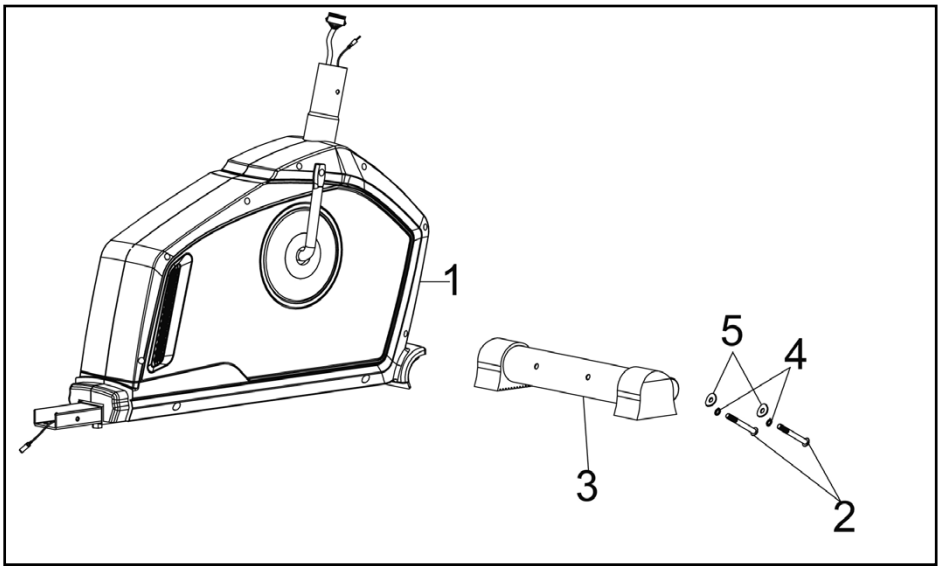

Hardware Step 1

2 Allen Screws (#2)
2 Curved Washers (#5)
2 Spring Washers (#4)

1. Attach the front stabilizer (3) to the main frame (1), securing with two allen screws (2), two spring washers (4) and two curved washers (5).

2 Support Tube and Rear Stabilizer

Hardware Step 2

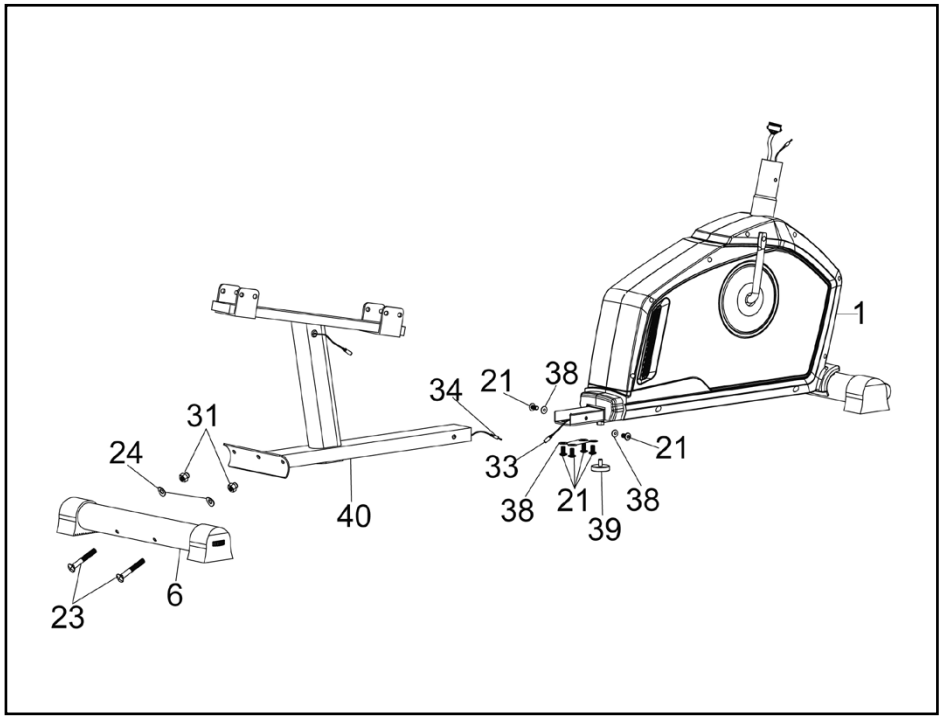

6 Allen Screw (#21)
6 Flat Washers (#38)
2 Carriage Bolt (#23)
2 Curved Washers (#24)
2 Domed Nut (#31)

1. Connect middle extension hand pulse wire (33) with rear extension hand pulse wire (34). Attach support tube (40) to main frame (1), and tighten with 6 sets of allen screw (21) and flat washer (38). Attach the leveling pad (39) to the bottom of main frame (1).

2. Attach rear stabilizer (6) to the support tube (40) and tighten with 2 sets of carriage bolt (23), curved washer (24) and domed nut (31).
   Tip: Avoid pinching the Extension Wires

SB150 Assembly Instructions

3 Console and Upright

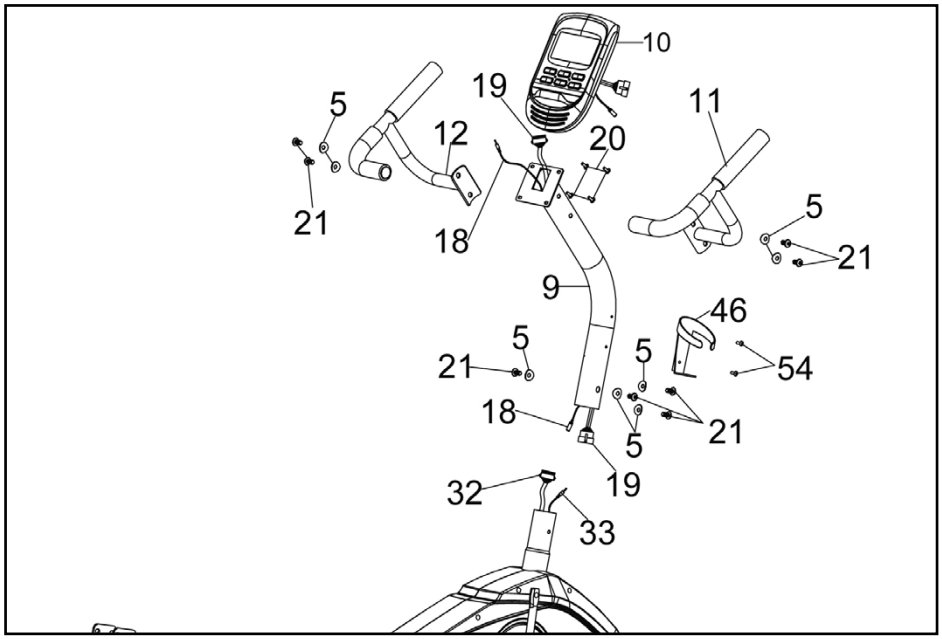

Hardware Step 3

8 Curved Washers (#5)
8 Allen Screws (#21)

1. Connect the upper extension computer wire (19) to the lower computer wire (32).

2. Connect the front extension hand pulse wire (18) to the middle extension hand pulse wire (33).

3. Attach front post (9) to the main frame. Secure using four curved washers (5) and four allen screws (21).
   Tip: Avoid pinching the Extension Wires and handpulse wires

4. Attach the left stationary handlebar (12) to the front post (9). Secure using two curved washers (5) and two allen screws (21). Repeat for the right stationary handlebar (11).

5. Connect the front extension hand pulse wire (18) to the pulse wire from the computer (10)

6. Connect the upper extension computer wire (19) to the wire from the computer (10).
   Tip: Avoid pinching the Extension Wires and pulse wires

7. Attach the computer (10) to the top bracket of front post (9)Secure using four screws (20) which are pre-assembled on the back of computer.

8. Attach bottle holder (46) to the front post (9). Secure using two screws (54) which are pre-assembled on the front post (9).

4 Seat Assembly

Hardware Step 4

12 Allen Screws (#21)

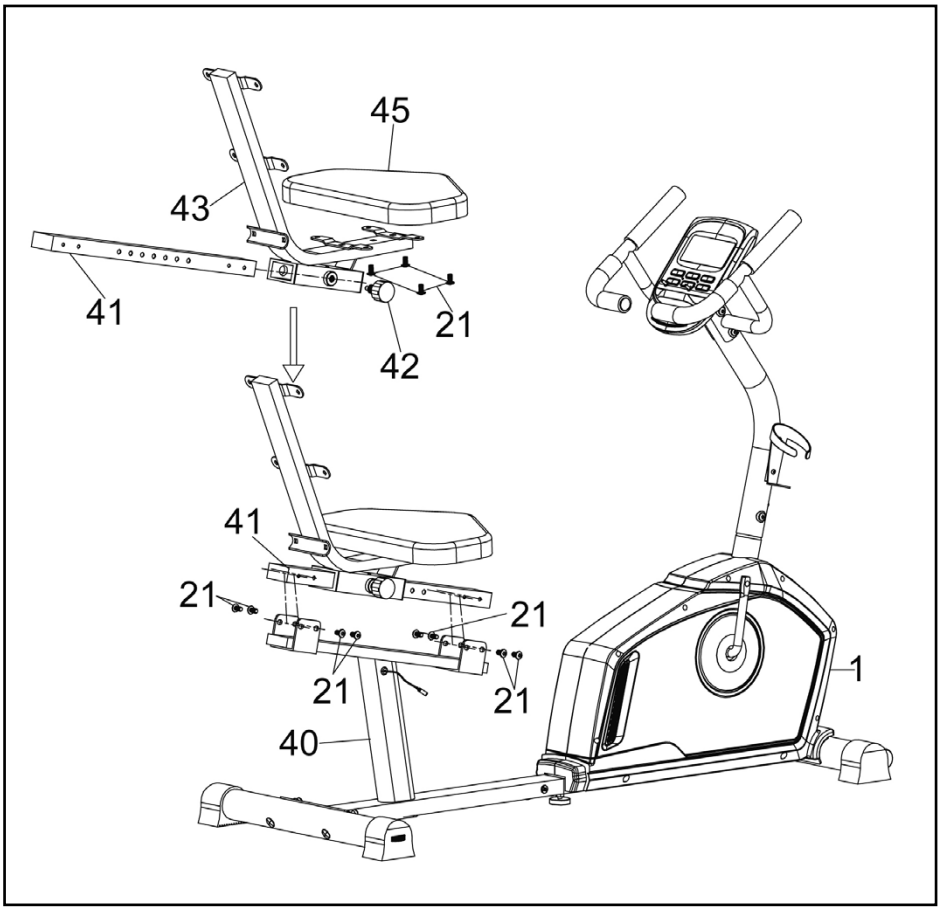

1. Insert the sliding tube (41) into seat support bracket (43). Line up the holes and secure sliding tube (41) with quick release knob (42).

2. Attach seat cushion (45) to the seat support bracket (43). Secure using four allen screws (21).

3. Attach the sliding tube (41) to the support tube (40). Secure using eight allen screws (21).

SB150 Assembly Instructions

5 Rear Handlebar Assembly

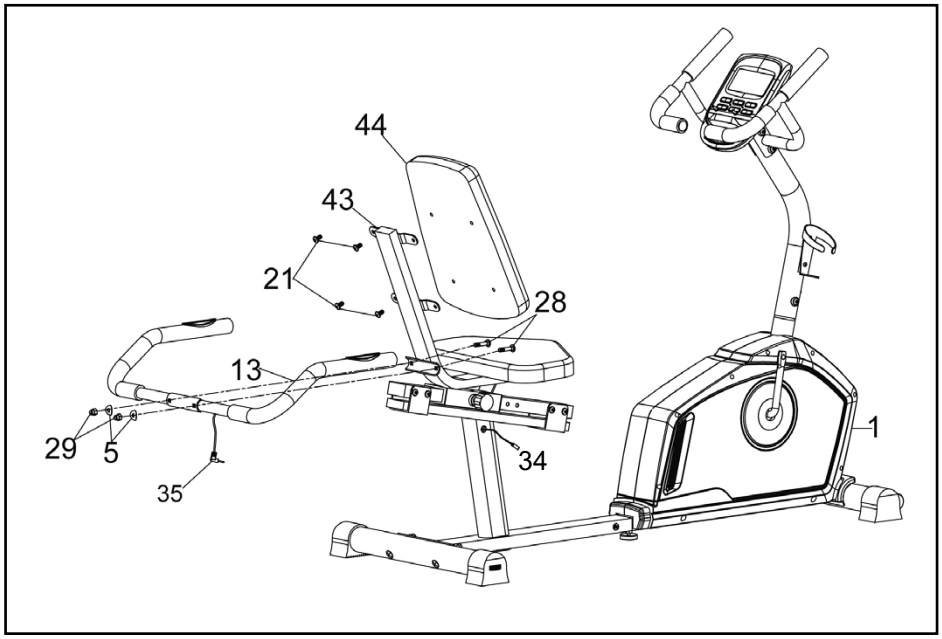

Hardware Step 5

4 Allen Screws (#21)
2 Carriage Bolts (#28)
2 Curved Washers (#5)
2 Domed Nuts (#29)

1. Attach back cushion (44) to the seat support bracket (43). Secure using four allen screws (21).

2. Attach rear handlebar (13) to the seat support bracket (43). Secure using two carriage bolts (28), two curved washers (5) and two domed nuts (29).

3. Connect rear extension hand pulse wire (34) to the hand pulse wire (35).
   Tip: Avoid pinching the pulse Wires

6 Pedals and Base Cover

Hardware Step 6

Preassembled on covers:
5 Self Tapping Screws (#53)

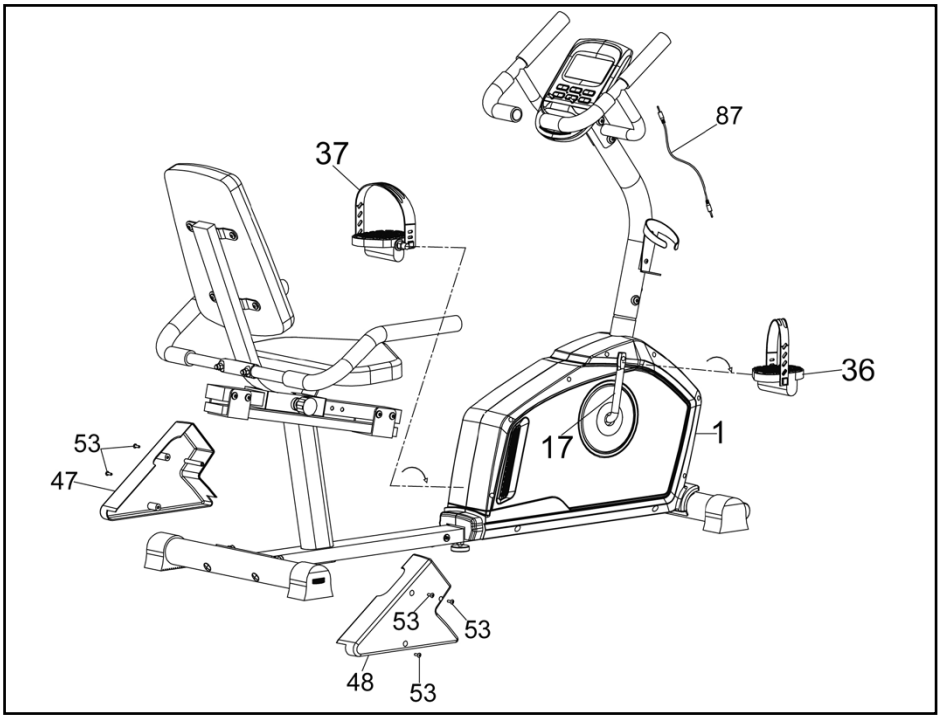

1. The left and right pedals (37 &36) are marked “L” & “R”. Attach the straps to the pedals. Connect the right pedal (36) to the crank (17) on the right hand side of the cycle as you sit on it. Repeat for the left pedal (37).
   Note: The right pedal should be threaded on clockwise and the left pedal on counter-clockwise.

2. Attach the left rear support cover (47) to the left side of the support tube (40). Secure using two self tapping screws (53).

3. Attach the right rear support cover (48) to the right side of the support tube (40). Secure using three self tapping screws (53).

SB150 Assembly Instructions

7 Power Adapter and MP3

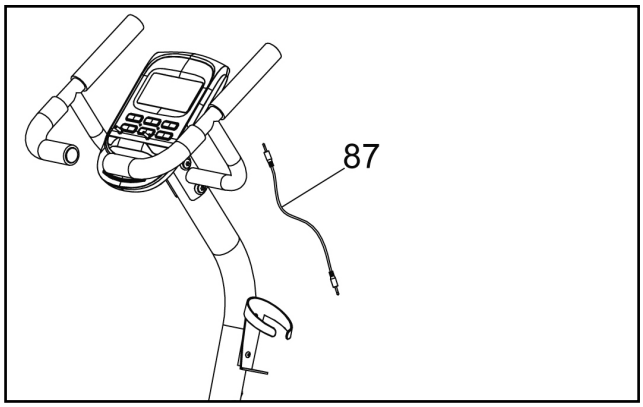

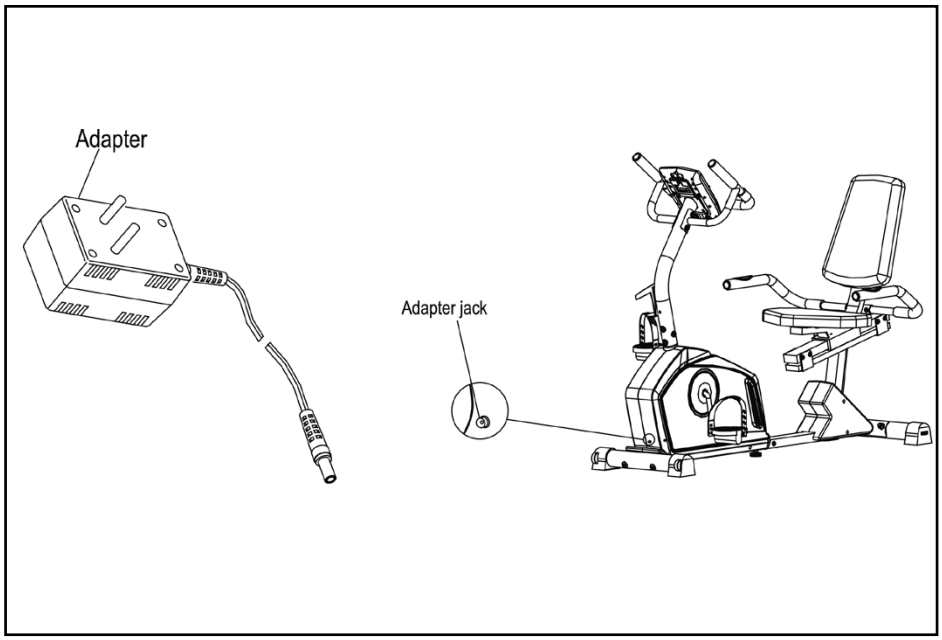

1. *To listen to an MP3 during your workout, connect the MP3 with the computer (10) by using the audio wire (87)*
2. *Plug adapter into the power receptacle.*

Operation of Your Console

SB150 Console



Key Functions

START/STOP: Press to start or stop your exercise program.
Press to start body fat measurement.

UP: Press UP to increase the target values.
Press UP to increase the tension level while you are exercising.
Press UP to select your desired program.

DOWN: Press DOWN to decrease the preset target values.
Press DOWN to decrease the tension level.
Press DOWN to select your desired program.

ENTER: Press to accept the desired program.
Press to accept the target value.
Press and hold for four seconds to reset all values to zero when the unit is stopped.

Body Fat: Press to have your body fat measurement.

Pulse RECOVERY: Press to have the recovery grade of F1 to F6

Functions

Time:	Shows your elapsed workout time up to 99:59. Counts down from your preset target time to 0:00 during your workout.
Speed:	Displays between the current speed up to 99.9 M/H.
Distance:	Displays the cumulative distance traveled during your workout up to 99.99 M. Counts down from your preset target time to 0 M during your workout.
RPM:	Displays the current rotation per minute.
Calories:	Displays between the cumulative calories burned at any given time during your workout up to 999. Counts down from your preset target calorie to 0 *Note: This is a rough guide used for comparison of different exercise sessions, which cannot be used for medical purposes.*
Body fat:	Hand on the pulse grip, press the body fat key, the monitor will be measure the data of fat% , bmi, bmr.
Gripped pulse	Display's the user's current heart rate in beats per minute during the workout. Both hands must hold the gripped pulse for a heart rate reading during your workout. You may preset your target pulse. The computer will alarm to remind you as soon as your current heart rate has achieved at the preset figure. Note: This data is a rough guide used for comparison of different exercise sessions, which cannot be used for medical purposes.
Pulse Recovery:	Your computer is equipped with a recovery program to monitor your heart rate recovery. After your workout, press the recovery button and keep both hands on the gripped pulse. The computer will cease monitoring all functions except time which will commence countdown from 00:60 to 00:00. Once zero is reached the pulse function will display a grade between F1 to F6. F1 being the best and F6 being the worst reading you can receive. Press the recovery button to return to the main display.

Note: If no pulse signal input then the computer will show "P" on the PULSE window. If the computer shows "ERR" on the message window, please re-press the PULSE RECOVERY key and please make sure your hands are keeping well on the grips or the chest transmitter is attached well

WATT:	The amount of mechanical power the computer is recieving from your exercise.

DISTANCE BAR: Every bar indicates 0.1 mile.

SPEAKER: To listen to an MP3 during your workout, connect the MP3 to the monitor (10) by using the audio wire (87). Volume is controlled by the MP3 player.

PROGRAM: Displays the program level from P1 to P24
P1 –Manual you can control the tension level
P2 to P13 programs are preset at the factory.
P14 to P17 programs are user setting
P18 to P22 programs are heart rate control programs
P23 watt control program
P24 body fat program

Remarks
The monitor will turn on automatically by pressing any key or when you start to pedal. The monitor will shut off automatically if no signal is detected for four minutes and will keep all function values. You may press Start button or start to pedal to have the computer resume.

Program Introduction & Operation

Manual Program: Manual

P1 is a manual program. User can start exercise by pressing START/STOP key. The default resistance level is 7. Users may exercise in any desirous of resistance level (Adjusting by UP/DOWN keys during the workout) with a period of time or a number of calories or a certain distance.

Operations:
1. Use UP/DOWN keys to select the MANUAL (P1) program.
2. Press the ENTER key to enter MANUAL program.
3. The TIME will flash and you can press UP or DOWN keys to set your exercise TIME. Press ENTER key to confirm your desired TIME.
4. The DISTANCE will flash and you can press UP or DOWN keys to set your target DISTANCE.Press ENTER key to confirm your desired DISTANCE.
5. The CALORIES will flash and you can press UP or DOWN keys to set your exercise CALORIES. Press ENTER key to confirm your desired CALORIES.
6. The PULSE will flash and then you can press UP or DOWN keys to set your exercise PULSE. Press ENTER key to confirm your desired Pulse.
7. Press the START/STOP key to begin exercise.

Preset Program:

Steps, Hill, Rolling, Valley, Fat Burn, Ramp, Mountain, Intervals, Random, Plateau, Fartlek, Precipice Program
PROGRAM 2 to PROGRAM 13 is the preset programs. Users can exercise with different level of loading in different intervals as the profiles show. Users may exercise in any desirous of resistance level (Adjusting by UP/DOWN keys during the workout) with a period of time or a number of calories or a certain distance.

Operations:
1. Use UP/DOWN keys to select one of the above programs from P2 to P13.
2. Press the ENTER key to enter your workout program.
3. The TIME will flash and you can press UP or DOWN keys to setting your exercise TIME. Press ENTER key to confirm your desired TIME.
4. The DISTANCE will flash and you can press UP or DOWN keys to setting your target DISTANCE. Press ENTER key to confirm your desired DISTANCE.
5. The CALORIES will flash and you can press UP or DOWN keys to setting your exercise CALORIES. Press ENTER key to confirm your desired CALORIES
6. The PULSE will flash and then you can press UP or DOWN keys to set your exercise PULSE. Press ENTER key to confirm your desired Pulse.
7. Press the START/STOP key to begin exercise.

User Setting Program: User 1, User 2, User 3, User 4

Program 14 to 17 is the user setting program. Users are free to create the values in the order of TIME, DISTANCE, CALORIES and the resistance level in 10 columns. The values and profiles will be stored in

the memory after setup. Users may also change the ongoing loading in each column by UP/DOWN keys, and they will not change the resistance level stored in the memory.

Operations:
1. Use UP/DOWN keys to select the USER program from P14 to P17.
2. Press the ENTER key to enter your workout program.
3. The column 1 will flash, and then use the UP/DOWN keys to create your personal exercise profile. Press ENTER to confirm your first column of exercise profile. The default level is load 1.
4. The column 2 will flash, and then use the UP/DOWN keys to create your personal exercise profile. Press ENTER to confirm your second column of exercise profile.
5. Follow the above description 3 and 4 to finish your personal exercise profiles. Press ENTER to confirm your desired exercise profile.
6. The TIME will flash and you can press UP or DOWN keys to setting your exercise TIME. Press ENTER key to confirm your desired TIME.
7. The DISTANCE will flash and you can press UP or DOWN keys to setting your target DISTANCE. Press ENTER key to confirm your desired DISTANCE.
8. The CALORIES will flash and you can press UP or DOWN keys to setting your exercise CALORIES. Press ENTER key to confirm your desired CALORIES.
9. The PULSE will flash and then you can press UP or DOWN keys to set your exercise PULSE. Press ENTER key to confirm your desired Pulse.
10. Press the START/STOP key to begin exercise.

Heart Rate Control Program:

55% H.R.C., 65% H.R.C., 75% H.R.C., 85% H.R.C., Target H.R.C.

Program 18 to Program 22 is the Heart Rate Control Programs and Program 22 is the Target Heart Rate Control program.
Program 18 is the 55% Max H.R.C. - - Target H.R. = (220 – AGE) x 55%
Program 19 is the 65% Max H.R.C. - - Target H.R. = (220 – AGE) x 65%
Program 20 is the 75% Max H.R.C. - - Target H.R. = (220 – AGE) x 75%
Program 21 is the 85% Max H.R.C. - - Target H.R. = (220 – AGE) x 85%
Program 22 is the Target H.R.C. - - Workout by your target heart rate value.

Users can exercise according to your desired Heart Rate program by setting your AGE, TIME, DISTANCE, CALORIES or TARGET PULSE. In these programs, the computer will adjust the resistance level according to the heart rate detected. For example, the resistance level may increase every 20 seconds while the heart rate detected is lower than the TARGET H.R.C. Also the resistance level may decrease every 20 seconds while the heart rate detected is higher than the TARGET H.R.C.

Operations:
1. Use UP/DOWN keys to select one of the heart rate control program from P18 to P22.
2. Press the ENTER key to enter your workout program
3. The AGE will flash at P18 to P21 programs and you can press UP or DOWN keys to set your AGE. The default age is 35.
4. At program 22, the TARGET PULSE will flash and you can press UP or DOWN keys to set your TARGET PULSE between 80 to 180. The default TARGET PULSE is 120.
5. The TIME will flash and you can press UP or DOWN keys to set your exercise TIME. Press

ENTER key to confirm your desired TIME.
6. The DISTANCE will flash and you can press UP or DOWN keys to set your target DISTANCE. Press ENTER key to confirm your desired DISTANCE.
7. The CALORIES will flash and you can press UP or DOWN keys to set your exercise CALORIES. Press ENTER key to confirm your desired CALORIES.
8. Press the START/STOP key to begin exercise.

Watt Control Program: Watt Control

Program 23 is a Speed Independent Program. Press ENTER key to set up the values of TARGET WATT, TIME, DISTANCE and CALORIES. During the exercise mode, the level of resistance is not adjustable. For example, the level of resistance may increase while the speed is too slow. Also the level of resistance may decrease while the speed is too fast. As a result, the calculated value of WATT will close to the value of TARGET WATT setup by users.
Operations:
1. Use UP or DOWN key to select the WATT CONTROL (P23) program.
2. Press ENTER key to enter your workout program.
3. The TIME will flash and you can press UP or DOWN key to set your exercise TIME. Press ENTER key to confirm your desired TIME.
4. The DISTANCE will flash and you can press UP or DOWN key to set your target DISTANCE. Press ENTER key to confirm your desired DISTANCE
5. The WATT will flash and you can press UP or DOWN key to set your target WATT value. Press ENTER key to confirm your target WATT. The default WATT value is 100.
6. The CALORIES will flash and you can press UP or DOWN key to set your exercise CALORIES. Press ENTER key to confirm your desired CALORIES.
7. The PULSE will flash and then you can press UP or DOWN keys to set your exercise PULSE. Press ENTER key to confirm your desired Pulse.
8. Press the START/STOP key to begin exercise.

NOTE:
1. WATT = TORQUE (KGM) * RPM * 1.03
2. In this program, the WATT value will keep constant value. It means that if you peddle quickly, the resistance level will decrease and if you peddle slowly, the resistance level will increase. Always try to keep you in the same watt value.

Body Fat Program: Body Fat

Program 24 is a special program design to calculate users' body fat ratio and to offer a specific loading profile for users. There are 3 body types divided according to the FAT% calculated.
Type1: BODY FAT% > 27
Type2: 27 ≥ BODY FAT% ≥ 20
Type3: BODY FAT % < 20
The computer will show the test results of FAT PERCENT

Operations:

1. Use the UP/DOWN keys to select the BODY FAT (P24) program.
2. Press the ENTER key to enter your workout program.
3. The HEIGHT will flash and you can press the UP or DOWN keys to set your HEIGHT. Press ENTER key to confirm your HEIGHT. The default HEIGHT is 170cm or 5'07" (5feet 7 inches).
4. The WEIGHT will flash and you can press UP or DOWN keys to set your WEIGHT. Press ENTER key to confirm your WEIGHT. The default WEIGHT is 70kgs or 155lbs.
5. The GENDER will flash and you can press UP or DOWN keys to select your sex. The number 1 means male and 0 means female. Press ENTER key to confirm your Gender. The default sex is set as 1 (Male).
6. The AGE will flash and you can press the UP or DOWN keys to set your AGE. Press the ENTER key to confirm your AGE. The default AGE is 35.
7. Press the START/STOP key to begin body fat measurement. If the window shows "E" on the window, please make sure your hands are holding the grips well or that the chest belt is touching your body properly. Then press the START/STOP key again to begin body fat measurement.
8. After finishing your measurement, the computer will show the values of FAT PERCENT on the LCD display.
9. Press START/STOP key to begin exercise.

PRESET PROGRAM PROFILES:

PROGRAM 1
MANUAL

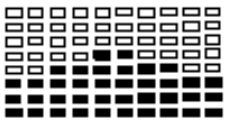

PROGRAM 2
STEPS

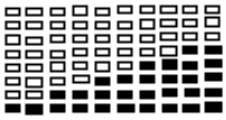

PROGRAM 3
HILL

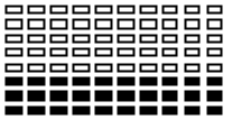

PROGRAM 4
ROLLING

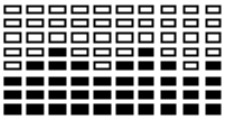

PROGRAM 5
VALLEY

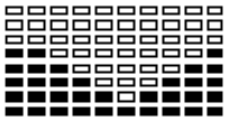

PROGRAM 6
FAT BURN

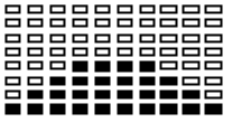

PROGRAM 7
RAMP

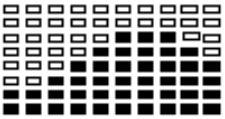

PROGRAM 8
MOUNTAIN

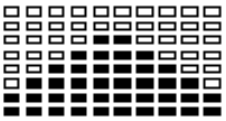

PROGRAM 9
INTERVAL

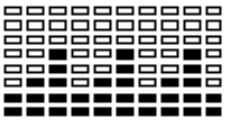

PROGRAM 10
SRANDOM

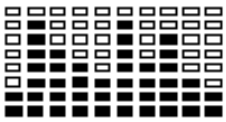

PROGRAM 11
PLATEAU

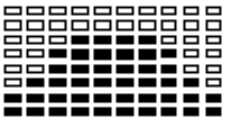

PROGRAM 12
FARTLEK

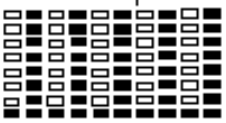

PROGRAM 13
PRECIPICE

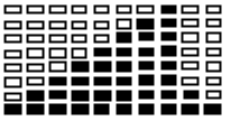

USER SETTING PROGRAM

PROGRAM 14
USER 1

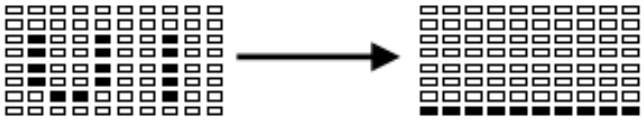

PROGRAM 15
USER 2

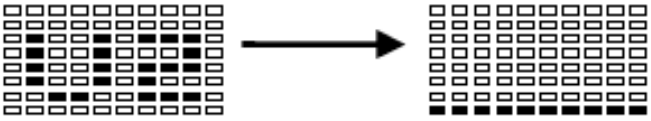

PROGRAM 16
USER 3

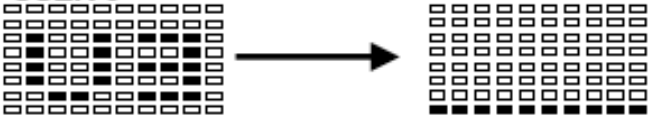

PROGRAM 17
USER 4

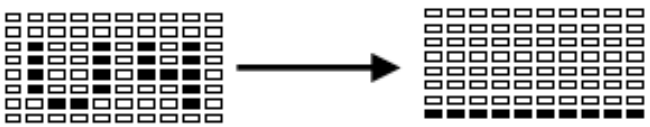

HEART RATE PROGRAM PROFILES:

PROGRAM 18

55% H.R.C.

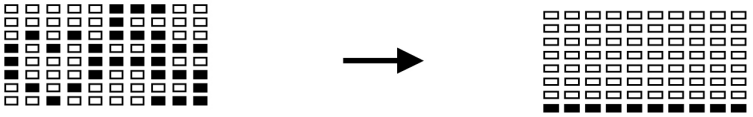

PROGRAM 19

65% H.R.C.

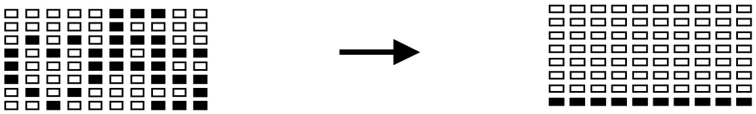

PROGRAM 20

75% H.R.C.

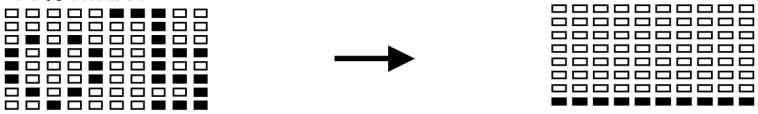

PROGRAM 21

85% H.R.C.

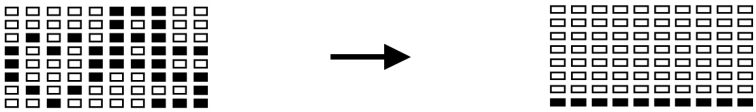

PROGRAM 22

TARGET H.R.C.

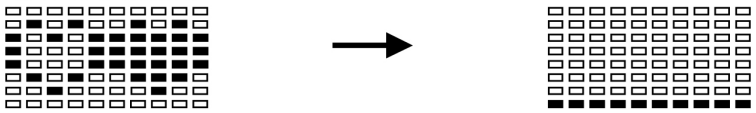

WATT CONTROL PROGRAM

PROGRAM 23

WATT CONTROL



BODY FAT TEST PROGRAMS:

PROGRAM 24

BODY FAT (STOP MODE) **BODY FAT (START MODE)**

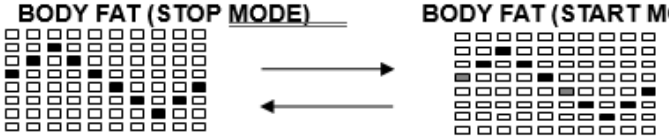

One of the Following Six Profiles Will Display Automatically after Measuring Your BODY FAT:

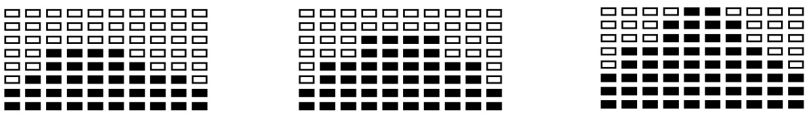

Workout Time: 40 minutes Workout Time: 40 minutes Workout time: 20 minutes

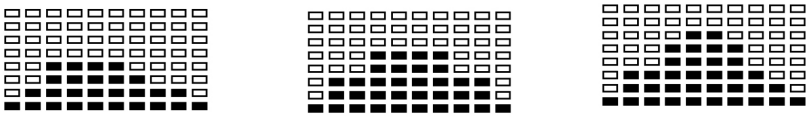

Workout Time: 40 minutes Workout Time: 40 minutes Workout time: 20 minutes

USER DIRECTION

HOW TO ADJUST THE SEAT
The seat can be adjusted forward or backward to the position that is the most comfortable. To adjust the seat, loosen the quick release knob, slide the seat to the the desired position and retighten the knob.

HOW TO ADJUST THE PEDAL STRAPS
To adjust the pedal straps, first pull the ends of the straps off the tabs on the pedals. Adjust the straps to the desired position, and then press the ends of the straps onto the tabs.

HOW TO MOVE THE EXERCISE BIKE
To move the exercise bike, grasp the rear stabilizer and carefully lift it until the exercise bike can be moved on the front wheels. Carefully move the exercise bike to the desired location and then lower it.

HOW TO LEVEL THE EXERCISE BIKE
The bike is equipped with adjustable end caps. If the unit is wobbly, please turn the leveling caps on the rear stabilizer to level the unit.

HOW TO CHANGE MILES TO KM
Two people are needed for this. Unplug the adaptor from the cycle.
Press the start/stop button, the enter button and the up button all at the same time and connect the adaptor.
Screen will beep and turn on.
Press the enter button until the miles or km is flashing.
Press the up button to change to km
Press enter button until the monitor resets.
Your cycle is now in km.

Trouble Shooting

Problem	Cause	Solution
Monitor does not display	Adapter not plugged in	Plug adapter in
	Computer Wires not connected	Ensure the computer wires are connected properly at the upright and computer
No speed or distance displays on the monitor	Sensor wire not connected	Ensure the computer wires are connected properly at the upright and the computer
	Sensor wire not working properly	Replace sensor wire
	Monitor not working properly	Replace monitor
No tension	Magnetic wheel not working properly	Replace magnetic wheel
	Computer wires not connected properly	Ensure the computer wires are connected properly at the upright and the computer
Heart rate not displaying	Pulse wire not connected	Secure plug wires together
	Hand pulse defective	Replace hand pulse grip
	Monitor not working	Replace Monitor
Grinding Noise	Crank bearing defective	Replace crank bearings
	Idler pulley defective	Replace idler pulley
	Flywheel defective	Replace flywheel
Squealing	V-belt slipping	Adjust v-belt
E1 Monior cannot read the signal change (level change or level change cannot reach target position) from the gear motor	Monitor has a problem	Replace monitor
	The connection cables from monitor to gear motor are damaged or disconnected. Pins of the connector are bent or not fix well.	Check all computer plugs and wires are connected firmly.
	Gear Motor damage or circuit on the gear motor is abnormal.	Replace gear motor
	Wire cable from gear motor to magnetic system is too short to drive the magnetic system or position is not correct.	Adjust the length of motor wire to make sure there are enough space to drive the motor.
E2 The computer cannot interface with the IC chip.	EEPROM has problem (EEPROM is installed incorrect)	Replace monitor
E3	The gear motor cannot read the signal change from the level one within 4 seconds after press the start button.	Replace gear motor

Maintenance

The safety of this produce can be maintained only if regular periodic checks are made. Most checks can be performed once a week. However some checks should be made before each workout, and are indicated as such below.

Checks

• Check that seat nuts are secure, check before each workout.
• Check that pedals are tight, pedals can work loose over time.
• Check that stabilizer bolts are tight, check before each workout this.
• Check that handlebar is secure, if not, tighten, check before each workout this.
• Should a part become defective, replace it immediately. Do not allow use of the equipment until it has been repaired.

Cleaning

A damp cloth is sufficient to clean most surfaces of this unit. Be careful not to drip water on the monitor. A mild liquid soap may be added if needed.

Manufacturer's Limited Warranty

Effective April 26, 2024 - BIKE LIMITED WARRANTY

XTERRA Fitness Inc. warrants all its home use bike parts for a period of time listed below, from the date of retail sale, as determined by a sales receipt or in the absence of a sales receipt, eighteen (18) months from the original factory shipping date. XTERRA Fitness's responsibilities include providing new or remanufactured parts, at XTERRA Fitness's option, and technical support to our independent dealers and servicing organizations. In the absence of a dealer or service organization, these warranties will be administered by XTERRA Fitness directly to a consumer. The warranty period applies to the following components:

Home Use Limited Warranty

Frame	Parts	Labor
1 Years	1 Year	None

NORMAL RESPONSIBILITIES OF THE CONSUMER

This warranty applies only to products in ordinary household use. The consumer is responsible for the items listed below:

1. The warranty registration card must be completed and returned to the address listed on the card within 10 days of the original purchase to validate the manufacturer's limited warranty or register online at http://www.xterrafitness.com/warrantyreg.html.
2. Proper use of the bike in accordance with the instructions provided in this manual, including maintenance.
3. Proper connection to a power supply of sufficient voltage, replacement of blown fuses, repair of loose connections or defects in house/facility wiring.
4. Expenses for making the bike accessible for servicing, including any item that was not part of the bike at the time it was shipped from the factory.
5. Damages to the bike finish during shipping, installation or following installation.

EXCLUSIONS

This warranty does not cover the following:

1. CONSEQUENTIAL, COLLATERAL, OR INCIDENTAL DAMAGES SUCH AS PROPERTY DAMAGE AND INCIDENTAL EXPENSES RESULTING FROM ANY BREACH OF THIS WRITTEN OR ANY IMPLIED WARRANTY. Note: Some states do not allow the exclusion or limitation of incidental or consequential damages, so this limitation or exclusion may not apply to you.
2. Damages caused by services performed by persons other than authorized XTERRA Fitness service companies, use of parts other than original XTERRA Fitness parts, or external causes such as alterations, modifications, abuse, misuse, accident, improper maintenance, inadequate power supply, or acts of God.
3. Products with original serial numbers that have been removed or altered.
4. Products that have been; sold, transferred, bartered, or given to a third party.
5. Products that are used as store display models.
6. Products that do not have a warranty registration on file at XTERRA Fitness, Inc. XTERRA Fitness reserves the right to request proof of purchase if no warranty record exists for the product.
7. Product use in any environment other than a residential setting.
8. THIS WARRANTY IS EXPRESSLY IN LIEU OF ALL OTHER WARRANTIES EXPRESSED OR IMPLIED, INCLUDING THE WARRANTIES OF MERCHANTABILITY AND/OR FITNESS FOR A PARTICULAR PURPOSE.

SERVICE

Keep your bill of sale. Twelve (12) months from the date on the bill of sale or eighteen (18) months from the date of factory shipping as determined by the serial number establishes the warranty period should service be required. If service is performed, it is in your best interest to obtain and keep all receipts. This written warranty gives you specific legal rights. You may also have other rights that vary from state to state. Service under this warranty must be obtained by following these steps, in order:

1. Contact your selling authorized XTERRA Fitness dealer. OR
2. Contact your local authorized XTERRA Fitness service organization.
3. If there is a question as to where to obtain service, contact our service department at (870) 333-5500
4. XTERRA Fitness's obligation under this warranty is limited to repairing or replacing, at XTERRA Fitness's option, the product through one of our authorized service centers. All repairs must be preauthorized by XTERRA Fitness. If the product is shipped to a service center freight charges to and from the service center will be the customer's responsibility. For replacement parts shipped while the product is under warranty, the customer will be responsible for shipping and handling charges. The owner is responsible for adequate packaging upon return to XTERRA Fitness. XTERRA Fitness is not responsible for damages in shipping. Make all freight damage claims with the appropriate freight carrier. DO NOT SHIP ANY UNIT TO OUR FACTORY WITHOUT A RETURN AUTHORIZATION NUMBER. All units arriving without a return authorization number will be refused.
5. For any further information, or to contact our service department by mail, send your correspondence to:

XTERRA Fitness, Inc.
P.O. Box 2037
Jonesboro, AR 72402-2037

Product features or specifications as described or illustrated are subject to change without notice. All warranties are made by XTERRA Fitness, Inc. This warranty applies only in the 48 contiguous United States. NOTE: This does not apply to Alaska or Hawaii.

3000 Nestle Road Jonesboro, AR 72401 - Phone:870-333-5500 - Fax:870-935-7611

©2024 All RIghts Reserved.