XTERRA FITNESS

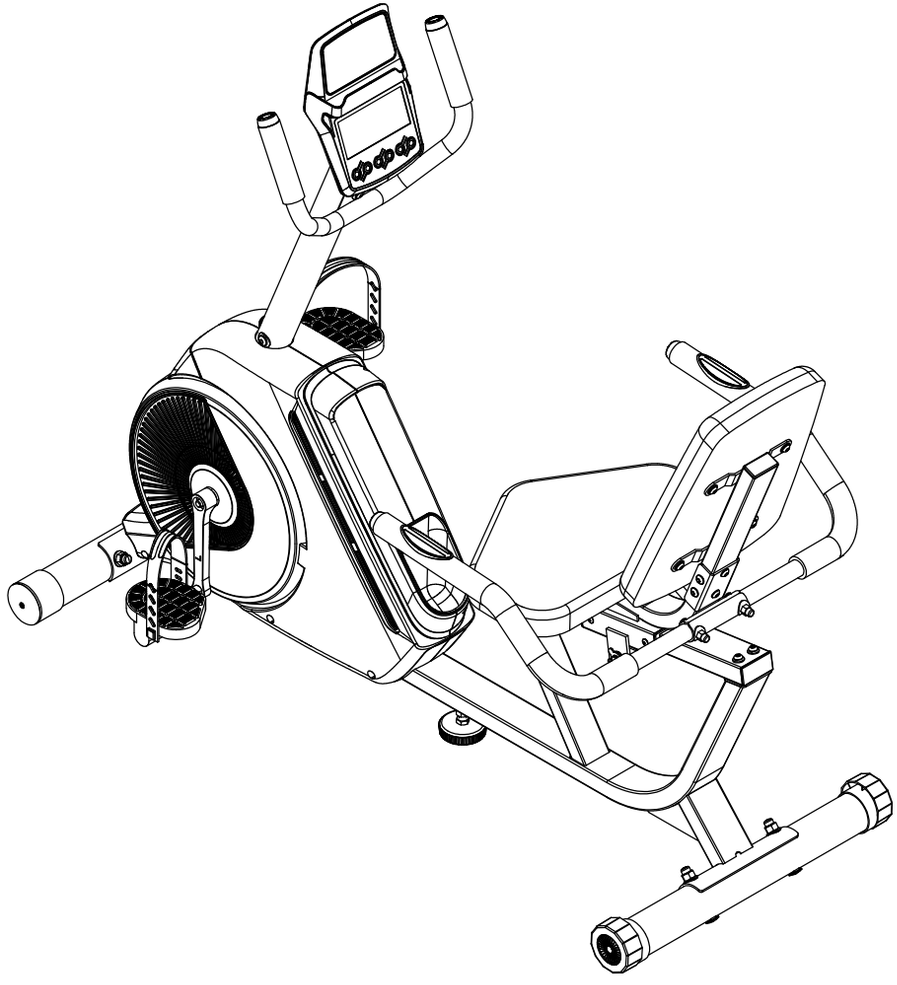

SB240 RECUMBENT BIKE

SB240_124013_OM_20251120

Online Support

If you require assistance or are experiencing issues with your XTERRA Machine, please contact customer care for additional help.

1-800-258-8511

questions@xterrafitness.com

Warranty Registration

Scan to quickly and easily register your new XTERRA Fitness machine.

Table of Contents

Product Registration 3
Warning / Safety Instructions
Product Label 4
Warning, Compliances, and Notices 5
Safety Instructions 6
Electrical Safety 7
Parts and Assembly
Parts of your Bike 8
Parts Included 9
Assembly 11
Adjusting Your Machine 18
Technology and Features
About Your Machine 19
Using the XF Connect App 20
Console Screen - Overview 21
Console Functions 22
Programs
Manual 25
Programs 26
Heart Rate Exertion 32
Maintenance & Care 34
Exploded View Diagram 35
Warranty 37
Error Codes 40

PRODUCT REGISTRATION

Congratulations on your new Recumbent Bike, and welcome to the XTERRA Fitness family!

Thank you for your purchase of this quality unit from XTERRA Fitness. Your new unit was manufactured by one of the leading fitness manufacturers in the world and is backed by one of the most comprehensive warranties available. XTERRA Fitness will do all we can to make your ownership experience as pleasant as possible for many years to come.

If you have questions, or if parts are missing or damaged, or you require customer service, call (870) 336-4286. Please have your model number and serial number handy when you call.

Please take a moment at this time to record the name of the dealer, their telephone number, and the date of purchase below to make any future, needed contact easy. We appreciate your support and we will always remember that you are the reason that we are in business.

Serial Number	
Date of Purchase	
Dealer / Place of Purchase	

WARRANTY REGISTRATION

Use your smartphone to scan the QR code above to quickly and easily register your new XTERRA Fitness machine.

You can also go to **xterrafitness.com/warranty** under the Support tab to register online.

Version: 2.0
Revision: 11/20/25

PRODUCT LABELS

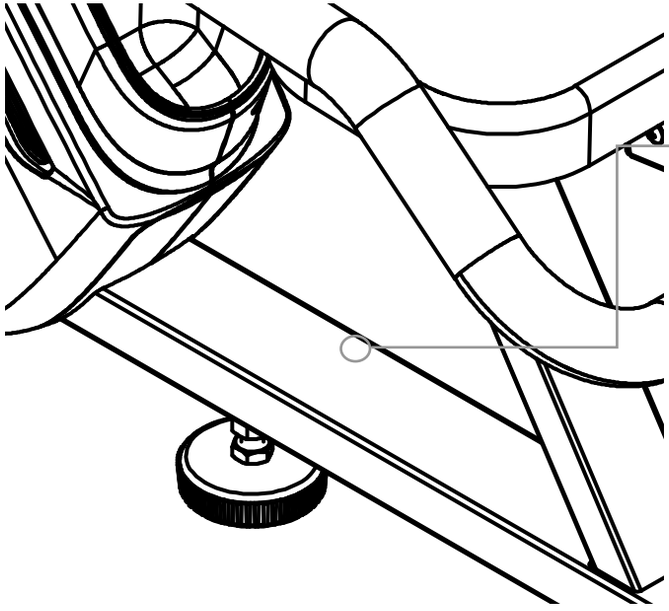



SERIAL NUMBER STICKER

This sticker will be found on the frame, near the leveler. Please record the number below the barcode for the purpose of registering your bike's warranty.



PROPOSITION 65 WARNING

This sticker will be found on the frame. The State of California requires us to inform you that this unit was manufactured using chemicals that could cause harm with improper use.

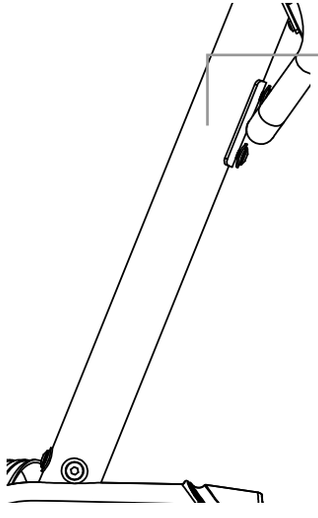

SAFETY WARNING STICKER

This sticker will be found on the left side of the unit's upright. The same warning can be found in this manual. Please read and be aware of the precautions before operating your unit.

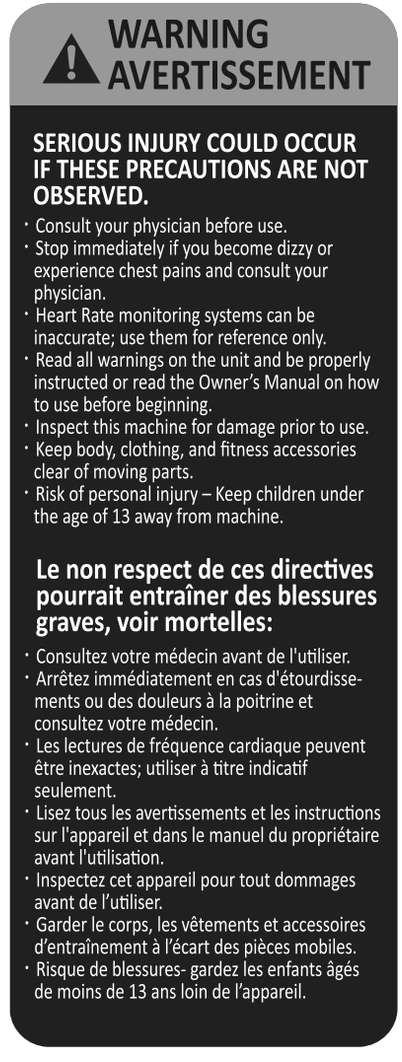

WARNINGS, COMPLIANCE AND NOTICES

This product has been certified to meet the following standards:

- FCC part 15
- Bluetooth (with FTMS)

This device complies with part 15 of the FCC Rules. Operation is subject to the following two conditions: (1) this device must not cause harmful interference, and (2) this device must not accept any interference received, including interference that may cause undesired operation.

NOTE: This equipment has been tested and found to comply with the limits for a Class C digital device, pursuant to Part 15 of the FCC Rules. These limits are designed to provide reasonable protection against harmful interference in a residential installation. This equipment generates, uses and can radiate radio frequency energy and, if not installed and used in accordance with the instructions, may cause harmful interference to radio communications. However, there is no guarantee that interference will not occur in a particular installation. If this equipment does cause harmful interference to radio or television reception, which can be determined by turning the equipment off and on, the user is encouraged to try to correct the interference by one or more of the following measures:

1. Reorient or relocate the receiving antenna.
2. Increase the separation between the equipment and receiver.
3. Connect the equipment to an outlet on a circuit different from that to which the receiver is connected.
4. Consult the dealer or an experienced radio/TV technician for help.

CAUTION:

- To comply with FCC RF exposure compliance requirements, a separation distance of at least 20 cm must be maintained between the antenna of this device and all persons.
- This transmitter must not be co-located or operating in conjunction with any other antenna or transmitter

SAFETY INSTRUCTIONS

When using an electrical appliance, basic precautions should always be followed, including the following:
Read all instructions before using this appliance.

DANGER - To reduce the risk of electric shock:
Always unplug this appliance from the electrical outlet immediately after using and before cleaning.

WARNING - To reduce the risk of burns, fire electric shock, or injury to persons:

1. An appliance should never be left unattended when plugged in. Unplug from outlet when not in use, and before putting on or taking off parts.
2. Do not operate under blanket or pillow. Excessive heating can occur and cause fire, electric shock, or injury to persons.
3. This exercise equipment is not intended for use by persons with reduced physical, sensory or mental capabilities, or lack of experience and knowledge.
4. Use this appliance only for its intended use as described in this manual. Do not use attachments not recommended by the manufacturer.
5. Never operate this appliance if it has a damaged cord or plug, if it is not working properly, if it has been dropped or damaged, or dropped into water. Return the appliance to a service center for examination and repair.
6. Do not carry this appliance by supply cord or use cord as a handle.
7. Keep the cord away from heated surfaces.
8. Never operate the appliance with the air openings blocked. Keep the air openings free of lint, hair, and the like.
9. Never drop or insert any object into any opening.
10. Do not use outdoors.
11. Do not operate where aerosol (spray) products are being use or where oxygen is being administered.
12. Connect this appliance to a properly grounded outlet only. See Grounding Instructions.
13. The appliance is intended for household use.
14. To disconnect, turn all controls to the off position, then remove the plug from the outlet.
15. Do not operate equipment on deeply padded, plush or shag carpet. Damage to both carpet and equipment may result.
16. Before beginning this or any exercise program, consult a physician. This is especially important for persons over the age of 35 or persons with pre-existing health conditions.
17. Keep hands away from all moving parts.
18. The pulse sensors are not medical devices. Various factors, including the user's movement, may affect the accuracy of heart rate readings. The pulse sensors are intended only as exercise aids in determining heart rate trends in general.
19. Do not attempt to use your equipment for any purpose other than for the purpose it is intended.
20. Wear proper shoes. High heels, dress shoes, sandals or bare feet are not suitable for use on your equipment. Quality athletic shoes are recommended to avoid leg fatigue.
21. **User Weight Limit: 265 lbs.**

Please ensure that you review and adhere to the user weight restrictions and power requirements of your new machine. Failure to do so may result in serious injury or damage to your machine.

ELECTRICAL SAFETY

WARNING!

Route the power cord away from any moving part of the unit including the elevation mechanism and transport wheels.

NEVER remove any cover without first disconnecting AC power. If voltage varies by ten percent (10%) or more, the performance of your unit may be affected. **Such conditions are not covered under your warranty.** If you suspect the voltage is low, contact your local power company or a licensed electrician for proper testing.

NEVER expose this unit to rain or moisture. This product is **NOT** designed for use outdoors, near a pool or spa, or in any other high humidity environment. The temperature specification is 40 degrees C, and humidity is 95%, non-condensing (no water drops forming on surfaces).

Circuit breakers: Avoid AFCI/GFCI circuit breakers if possible. These breakers may trip occasionally during exercise because of the high inrush currents of the unit drive electronics and motor. This is an issue that affects all unit brands. New laws in your area may require these breakers. If you do have these breakers and outlets in your home, and are experiencing nuisance tripping, you should check if there are any other devices plugged into the same circuit. Some examples of devices that may also cause tripping are fluorescent lights with electronic ballasts, coffee maker, space heater, hair drier.

Optimally the unit should be the only device plugged into the circuit. Our units have surge suppressors built in to help avoid nuisance tripping. We have tested several AFCI/GFCI breakers and outlets with our products. Brands we have tested are: Eaton (Cutler Hammer Series), Leviton (Smart lock pro) and Schneider Electric (Canadian home series). These breakers do not trip in our testing, when connected to our units, as long as no other devices are plugged into the same circuit.

- **NEVER** operate this unit without reading and completely understanding the results of any operational change you request from the computer.
- Understand that changes in resistance do not occur immediately. Set your desired work level on the computer console. The computer will obey the command gradually.
- **NEVER** use your unit during an electrical storm. Surges may occur in your household power supply that could damage unit components. Unplug the unit during an electrical storm as a precaution.
- Use caution while participating in other activities while using your unit; such as watching television, reading, etc.
- Do not use excessive pressure on console control keys. They are precision set to function properly with little finger pressure.

PARTS OF YOUR BIKE

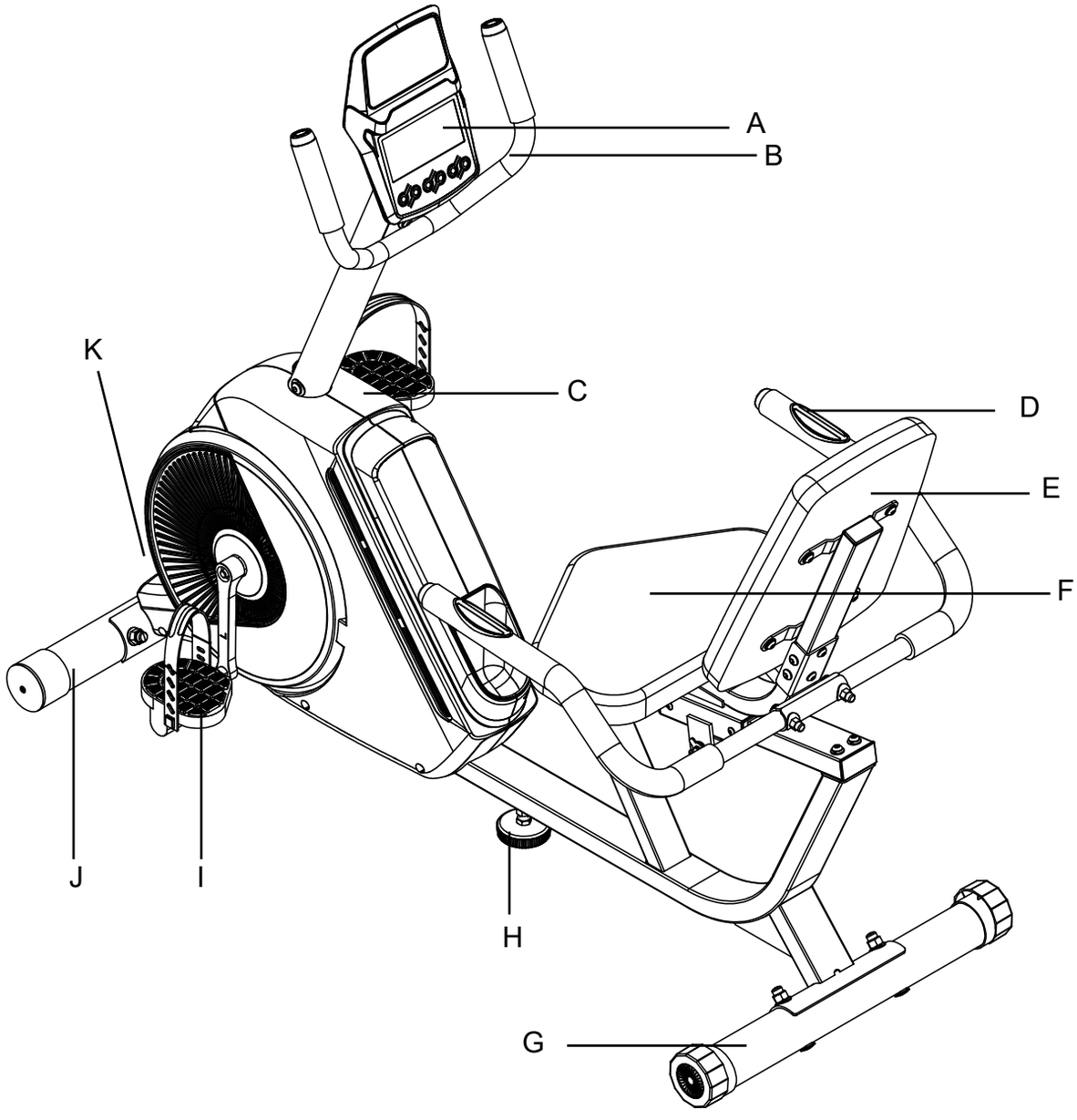

A. LCD Screen
B. Front Handlebars
C. Flywheel Cover
D. Hand Pulse Grips
E. Back Pad
F. Seat
G. Rear Stabilizer
H. Leveler
I. Pedal
J. Front Stabilizer
K. Power Input



The Power Input is found in front of the flywheel shroud.

PARTS INCLUDED

PARTS INCLUDED:

- ❑ Main frame
- ❑ Front/Rear stabilizer
- ❑ Front post
- ❑ Front handlebar
- ❑ Console
- ❑ Seat
- ❑ Back cushion
- ❑ Sliding tube
- ❑ Seat post
- ❑ Support tube for Back cushion
- ❑ Foot pad
- ❑ Pedal L/R
- ❑ Rear handlebar
- ❑ Hardware
- ❑ Manual
- ❑ Adaptor

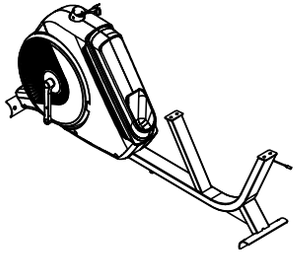

NO:1



NO:9

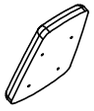

NO:10



NO:8

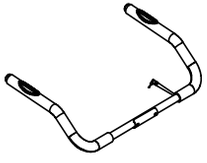

NO:74



NO:6

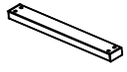

NO:11



NO:13

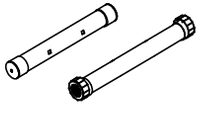

NO:2/3



NO:14

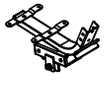

NO:12



NO:7



NO:15L/R



NO:82

PARTS INCLUDED - TOOL PACK

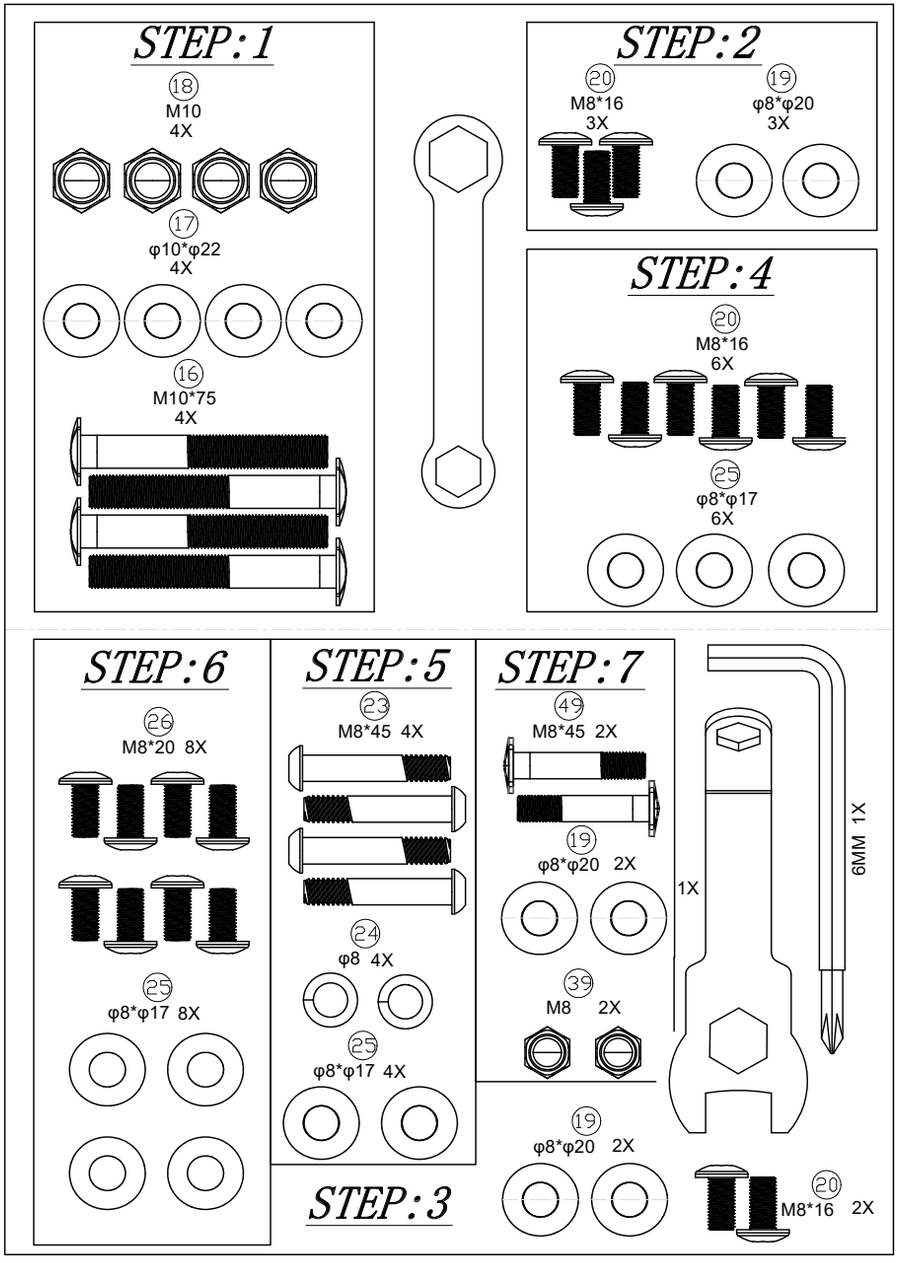

ASSEMBLY

1. Attach the **Front Stabilizer (2)** to the **Main Frame (1)** and secure with 2pcs **Carriage Bolts (16)**, 2pcs **Curved Washers (17)** and 2pcs **Domed Nuts (18)**.

Attach the **Rear Stabilizer (3)** to the **Main Frame (1)** and secure with 2pcs **Carriage Bolts (16)**, 2pcs **Curved Washers (17)** and 2pcs **Domed Nuts (18)**.

Screw the **Foot Pad (14)** into the bottom of **Main Frame (1)**.

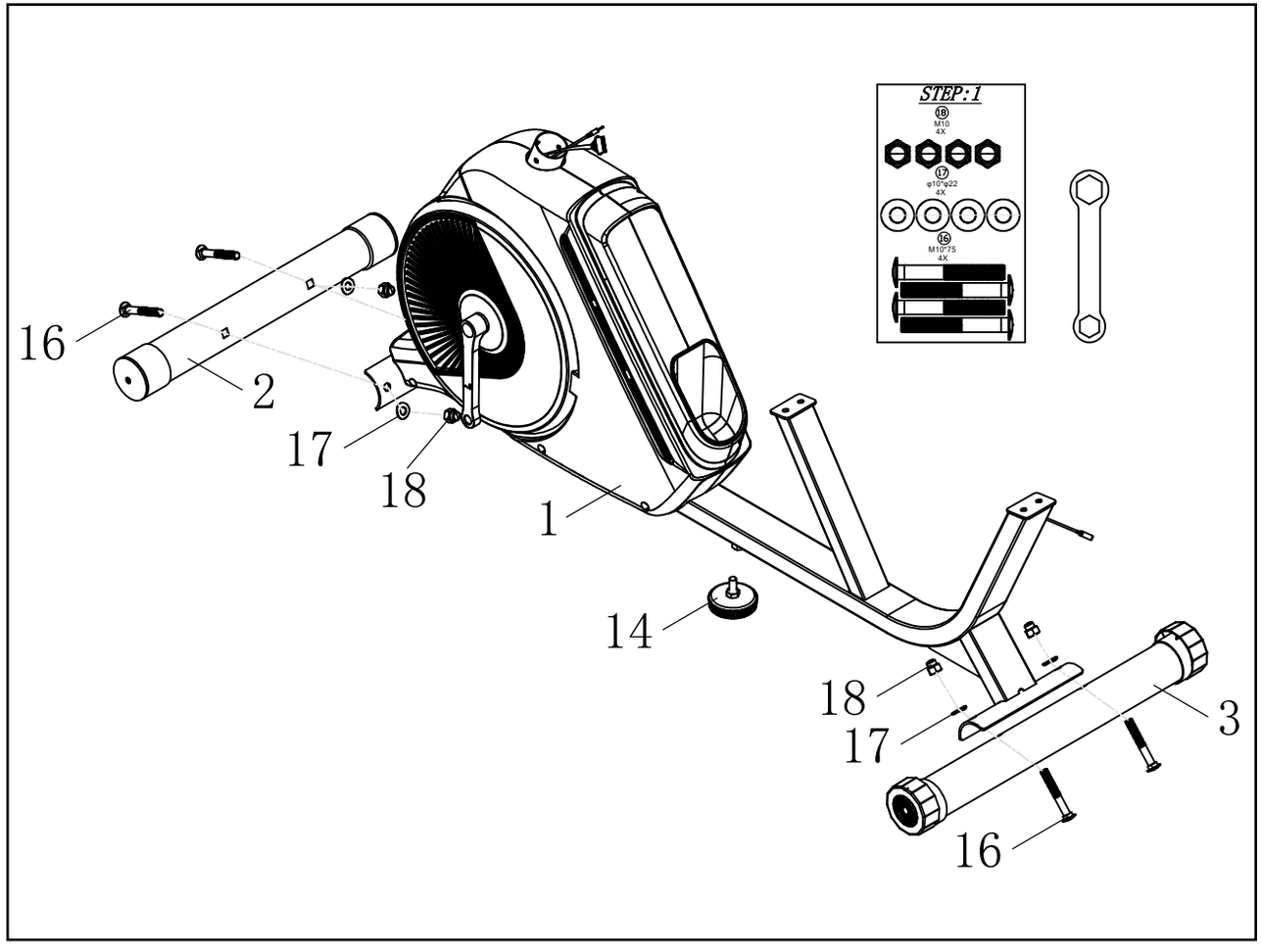

ASSEMBLY - CONTINUED

2. Connect the **Upper Pulse Sensor Wire (46)** with the **Middle Pulse Sensor Wire (47).**

Connect the **Upper Motor Cable (45)** with the **Lower Motor Cable (48)**.

Insert the **Front Post (6)** into the **Main Frame (1)**, secure with 3pcs **Curved Washers (19)** and 3pcs **Allen Bolts (20).**

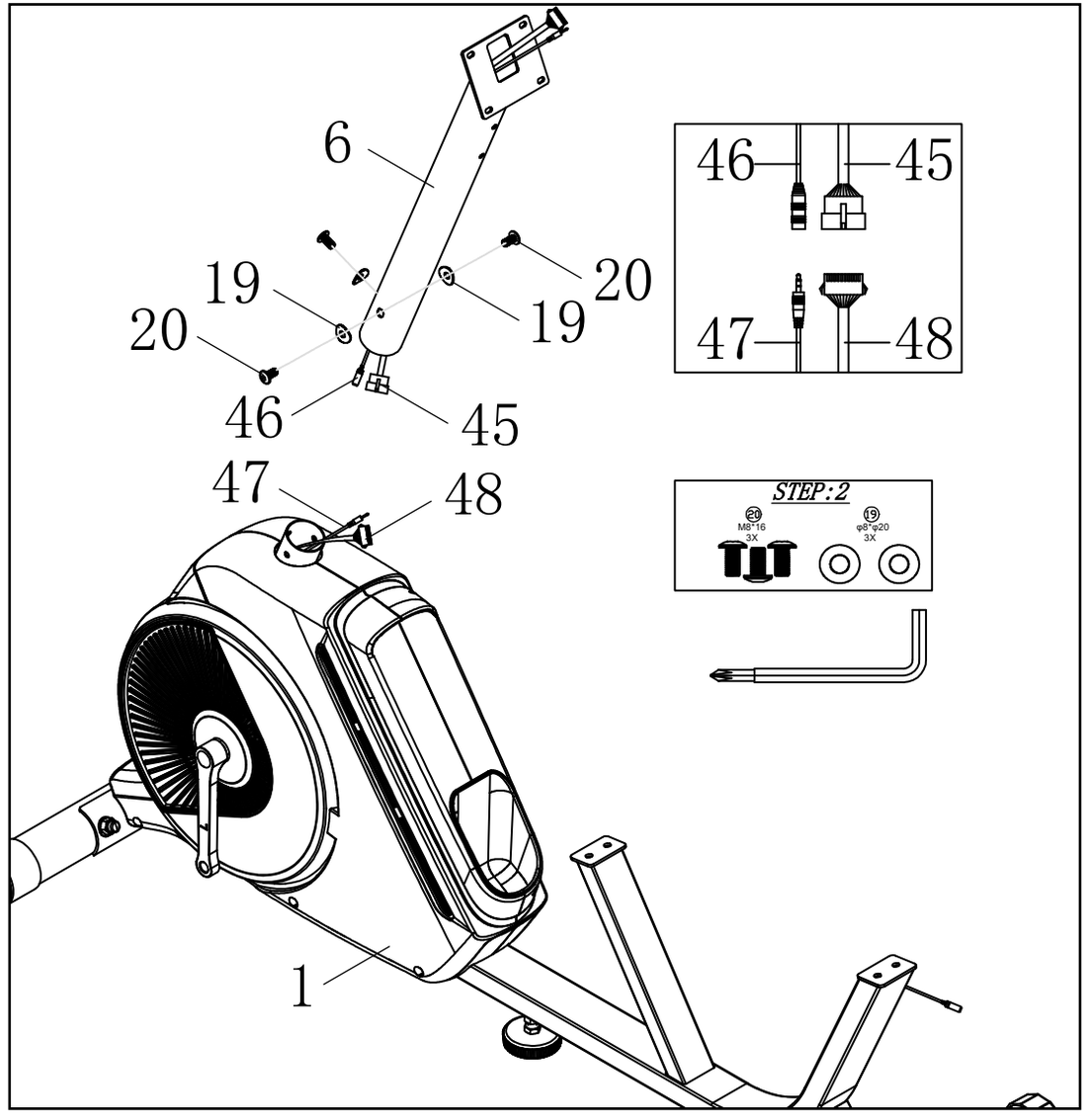

ASSEMBLY - CONTINUED

3. Attach **Front Handlebar (7)** to the **Front Post (6)** and secure with 2pcs **Curved Washers (19)** and 2pcs **Allen Bolts (20)**.

Connect the **Upper Motor Cable (45)** with the **Console (8)**.

Connect the **Upper Pulse Senor Wire (46)** with the **Console (8)**.

Attach the **Console (8)** to the **Front Post (6)** and secure it with 4pcs **Cross-Head Screws (44)** which are pre-assembled on the back of **Console (8)**.

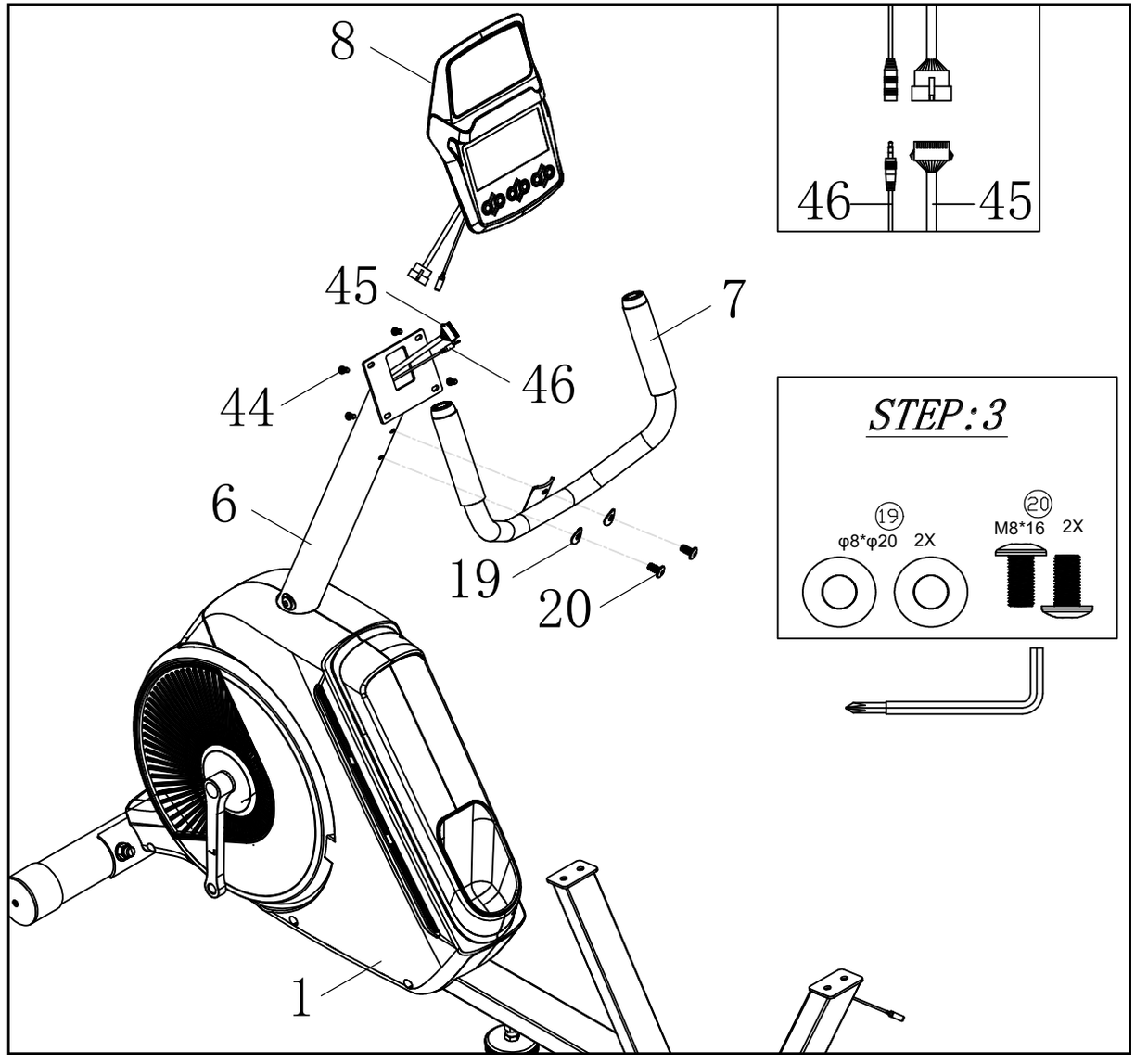

ASSEMBLY - CONTINUED

4. Insert **Support Tube (13)** into **Seat Post (12)** and secure with 6pcs **Allen Bolts (20)** and 6pcs **Flat Washers (25)**.

Insert the **Sliding Tube (11)** into the **Seat Post (12)**.

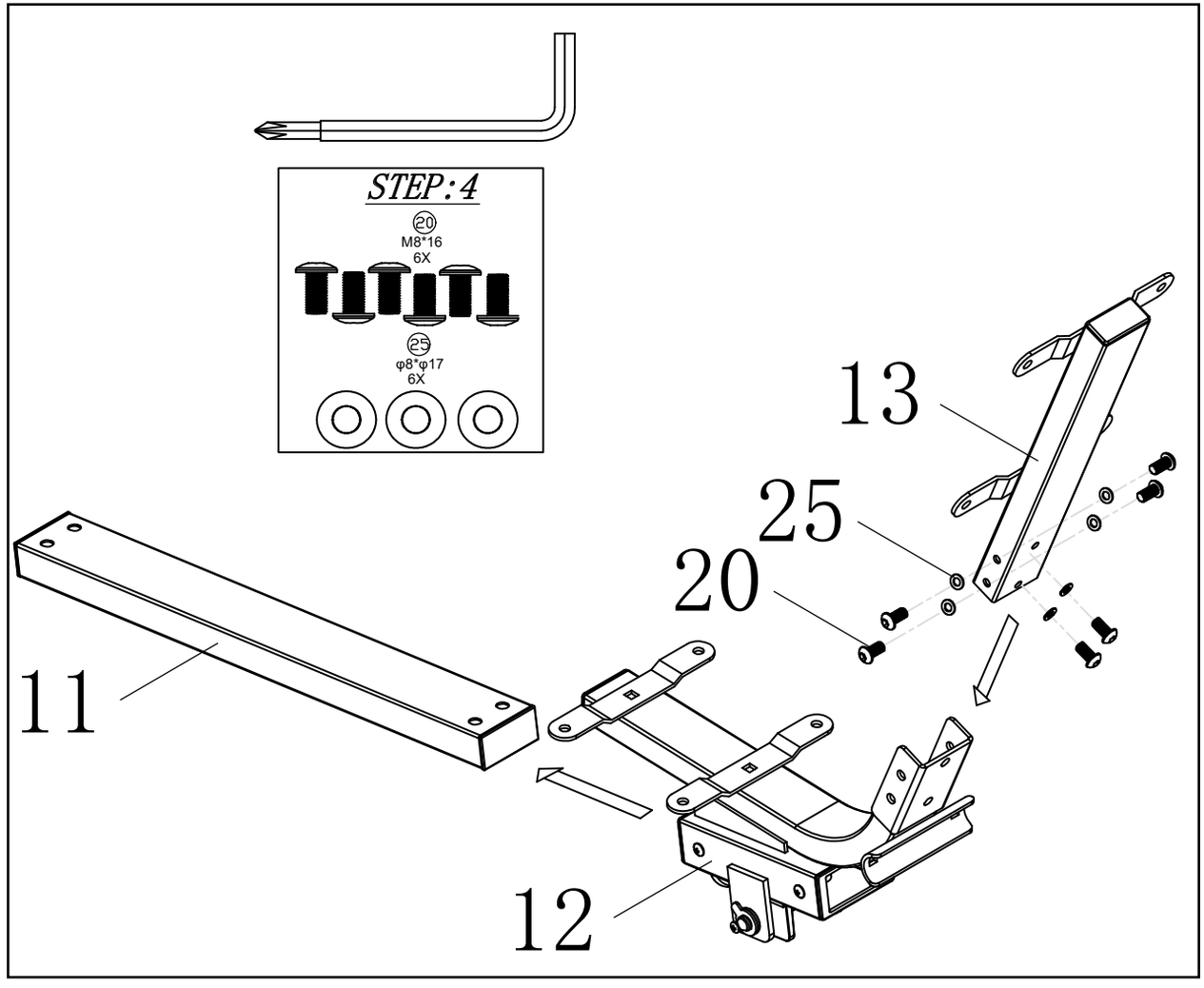

ASSEMBLY - CONTINUED

5. Attach the **Seat Post Assembly (11 & 12 & 13)** to the **Main Frame (1)** and secure with 4pcs **Allen Bolts (23)**, 4pcs **Spring Washers (24)** and 4pcs **Flat Washers (25)**.

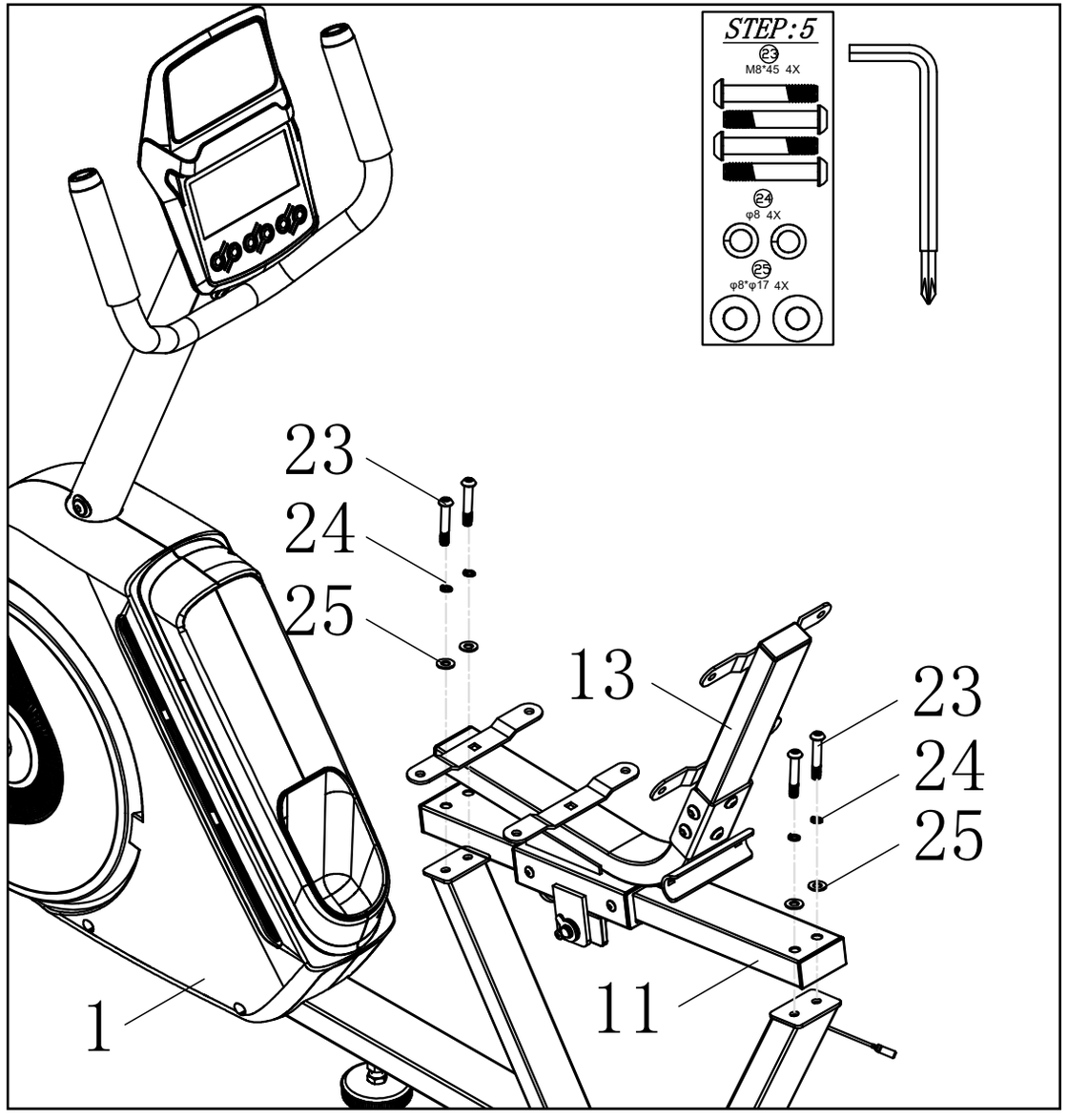

ASSEMBLY - CONTINUED

6. Attach the **Seat (9)** to the **Seat Post (12)** and secure with 4pcs **Flat Washers (25)** and 4pcs **Allen Bolts (26)**.

Attach the **Back Cushion (10)** to **Support Tube (13)** and secure with 4pcs **Flat Washers (25)** and 4pcs **Allen Bolts (26)**.

Secure the **Right Pedal (15r)** in clockwise to the right crank.

Secure the **Left Pedal (15l)** in counterclockwise to the left crank.

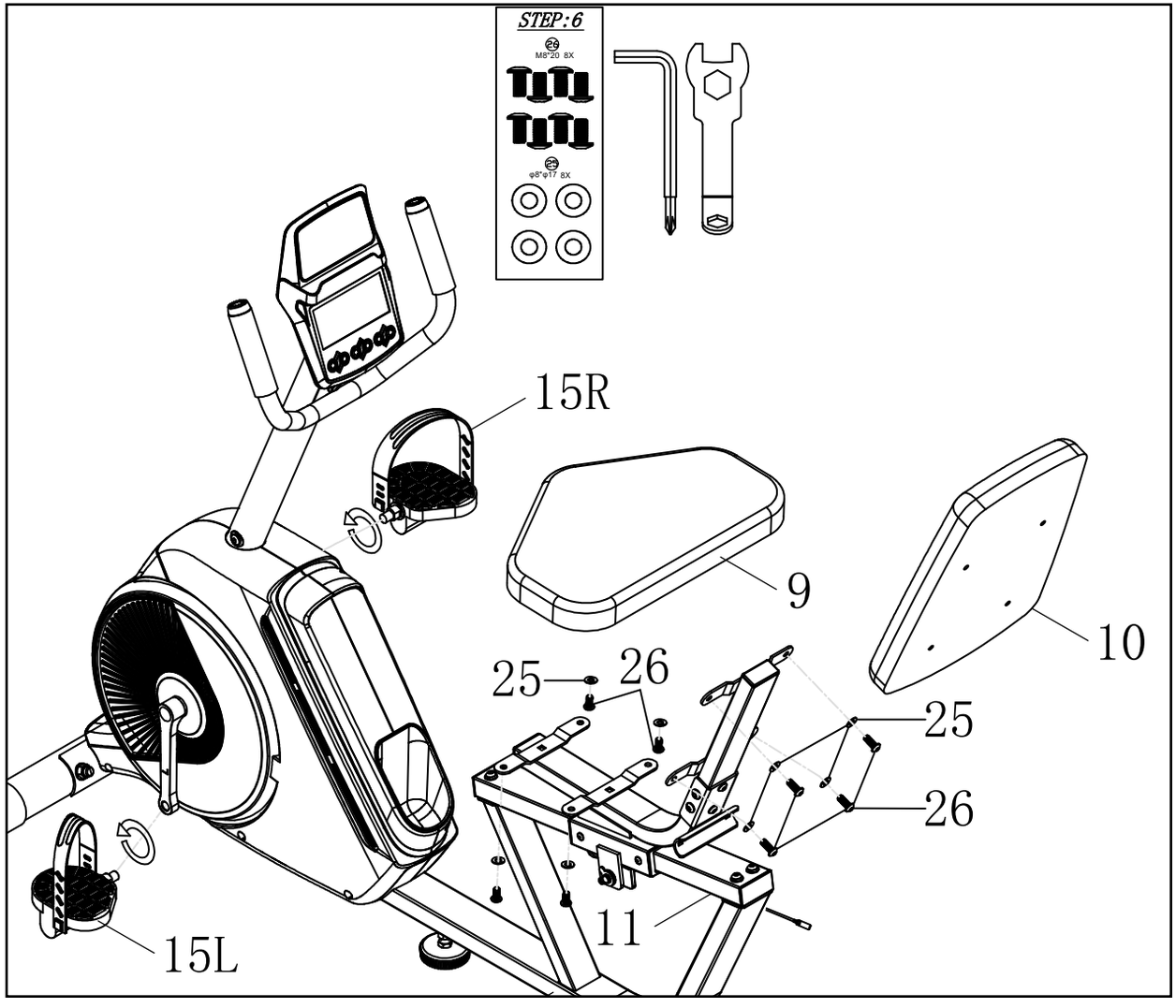

ASSEMBLY - CONTINUED

7. Attach the **Rear Handlebar (74)** to the **Seat Post (12)** and secure with 2pcs **Curved Washers (19)**, 2pcs **Carriage Bolts (49)** and 2pcs **Domed Nuts (39)**.

Connect the **Lower Pulse Sensor Wire (78)** with the **Middle Pulse Sensor Wire (47)**.

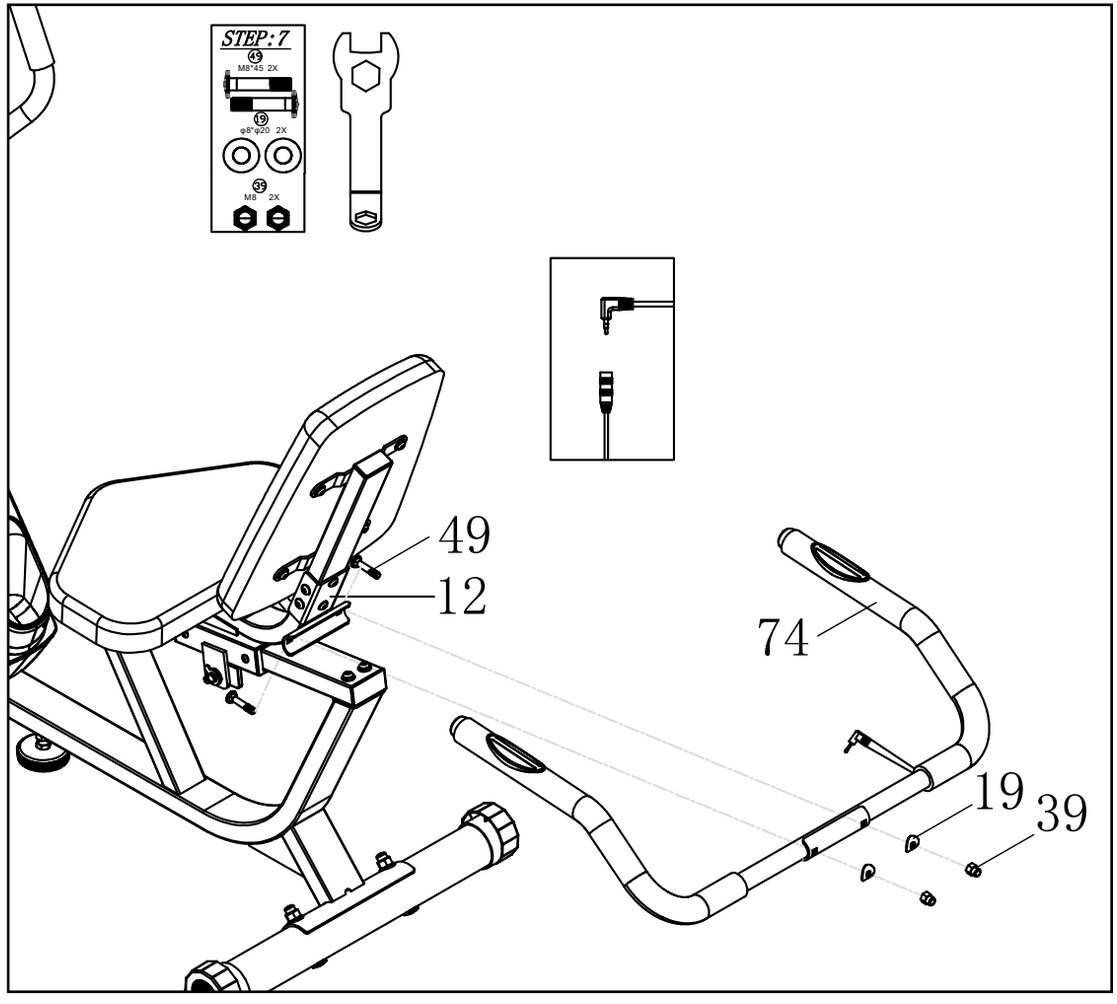

ADJUSTING YOUR MACHINE

Adjusting the Seat

Press the brake lever (36) down to loosen the sliding seat. Adjust the sliding seat to the proper position you need. Lift the brake lever (36) to fix the sliding seat

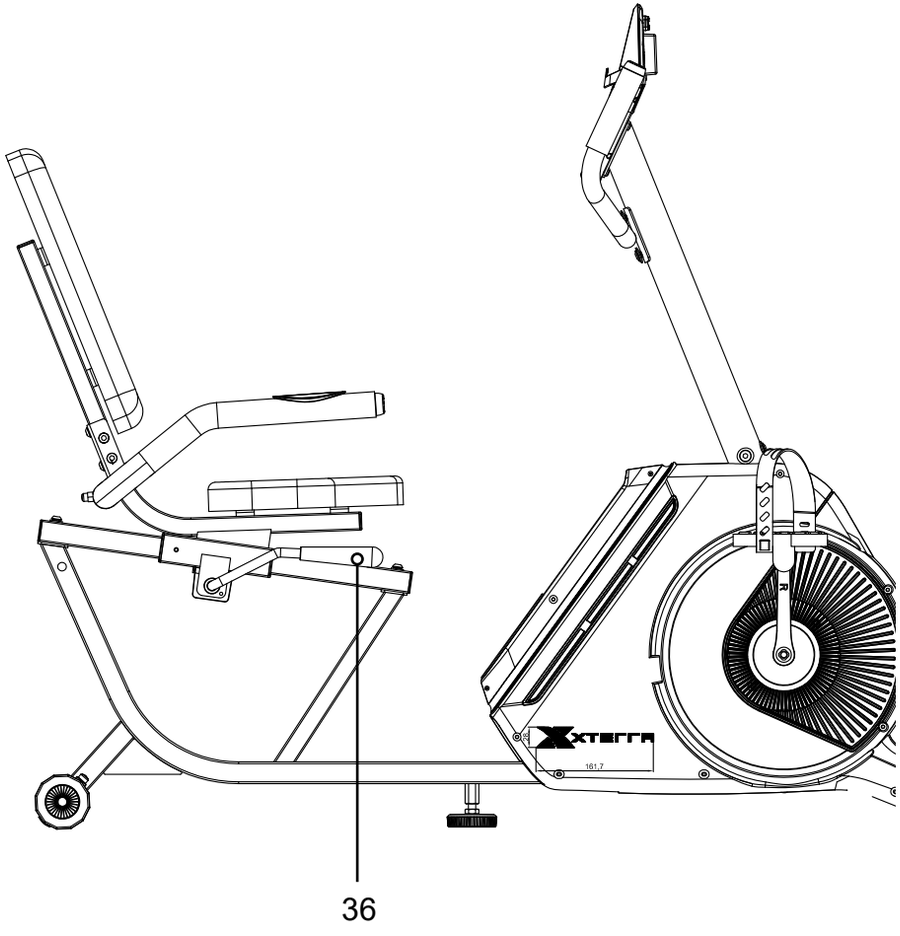

Moving the Machine

The front stabilizer has built-in transport wheels. Stand at the front of the machine and lift it up until the weight of the machine is transferred to the transport wheels. You can now easily move the machine to a new location.

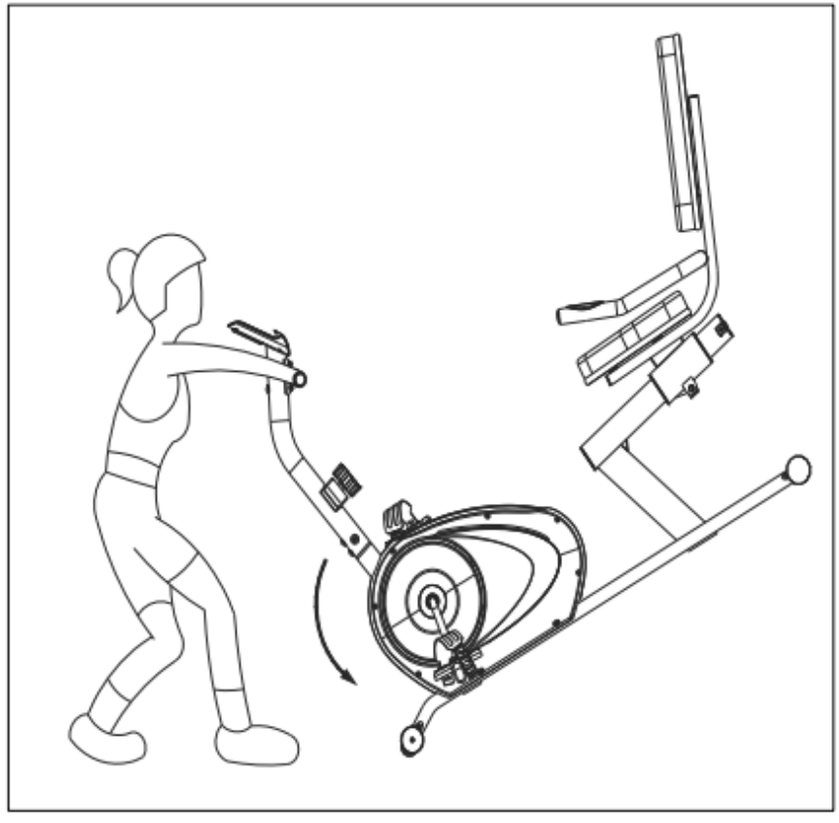

ABOUT YOUR MACHINE

Always use care and caution when operating your machine. Follow instruction in this manual to ensure safe operation and maintenance of your bike

Your new XTERRA Fitness bike has Bluetooth connectivity to give you access to the most advanced workout experiences available. Follow the instructions on page 20 to learn more about using the Bluetooth capabilities to their fullest potential.

Downloading the XF Connect app will help unlock more features - such as tracking workouts and sharing data via Google Fit and Apple Fitness. Simply search for "XF Connect" in the app store on your smartphone or tablet, or scan the QR code on the right



The XF Connect app is available on Google Play and the Apple App Store. Scan the QR Code below, and quickly and easily sign up to start taking your workout experience to a whole new level.

Available on the App Store

GET IT ON Google play

Be sure to follow XTERRA Fitness on your favorite social media platforms to view and share the latest fitness videos, images, and news.

facebook.com/XterraFitness

www.instagram.com/XterraFitness

youtube.com/user/XterraFitnessOnline

USING THE XF CONNECT APP

In order to help you achieve your exercise goals, your new exercise machine comes equipped with a Bluetooth® transceiver that will allow it to interact with selected phones or tablet computers via the XF Connect App. Just download the free XF Connect App from the Apple Store or Google Play, and then follow the instructions in the App to sync with your exercise machine.

Press the “DISPLAY” button from the APP to view the display of the current workout data. When your exercise is complete, choose “END & SAVE WORKOUT” to store the workout data.

1. Download the App by scanning the QR code on the right.
2. Open the App on your device (phone or tablet) and make sure Bluetooth® is enabled on your device (phone or tablet).
3. In the App click the Bluetooth® icon to search for your XF Connect equipment.
4. Under the Bluetooth® scan result list, select the machine for connect. When the App and equipment are synced, the Bluetooth® icon on the equipment’s console display will light up. Click “DISPLAY”, you may now start using your XF Connect App.
5. When your exercise is complete, choose “END & SAVE WORKOUT” to store the workout data. You will be prompted to sync your data with each available fitness cloud site. Please note, you will have to download the applicable compatible fitness App, such as Strava, MapMyFitness, Fitbit, etc., in order for the icon to be active and available.

Note: Your device will need to be running on a minimum operating system of IOS 13.1 or Android 8.0 for the XF Connect App to operate properly.



CONSOLE SCREEN - OVERVIEW



CONSOLE FUNCTIONS

1. **TIME**: Shows your elapsed workout time in minutes and seconds. Your computer will automatically count up from 0:00 to 99:59 in one second intervals. You can also program your computer to count down from a set value by using the UP and DOWN keys. If you continue exercising once the time has reached 0:00, the computer will begin beeping, and reset itself to the original time set, letting you know your workout is done.
2. **DISTANCE**: Displays the accumulative distance traveled during each workout up to a maximum of 99.99KM/MILE.
3. **RPM**: Your pedal cadence.
4. **WATT**: The amount of mechanical power the computer is receiving from your exercise.
5. **SPEED**: Displays your workout speed value in KM/MILE per hour.
6. **CALORIES**: Your computer will estimate the cumulative calories burned at any given time during your workout.
7. **PULSE**: Your computer displays your pulse rate in beats per minute during your workout.
8. **AGE**: Your computer is age-programmable from 10 to 99 years. If you do not set an age, this function will always default to age 35.
9. **TARGET HEART RATE (TARGET PULSE):** The heart rate you should maintain is called your Target Heart Rate in beats per minute.
10. **PULSE RECOVERY:** During the START stage, leave the hands holding on grips or leave the bluetooth chest strap (sold separately) then press “PULSE RECOVERY” key, time starts counting from 01:00 - 00:59 - - to 00:00. As soon as 00:00 is reached, the computer will show your heart rate recovery status with the grade F1.0 to F6.0.

    F1.0 means OUTSTANDING

    1.0 < F < 2.0 means EXCELLENT

    2.0 ≤ F ≤ 2.9 means GOOD

    3.0 ≤ F ≤ 3.9 means FAIR

    4.0 ≤F ≤ 5.9 means BELOW AVERAGE

    F6.0 means POOR

Note: If no pulse signal input then the computer will show “P” on the PULSE window. If the computer shows “ERR” on the message window, please re-press the PULSE RECOVERY key and please make sure your hands are keeping well on the grips or the bluetooth chest strap (sold separately) is attached as well.

**Unit is able to connect to Bluetooth heartrate transmitters (chest straps – sold separately), and to 3rd party apps via the FTMS protocol. Not compatible with 5khz chest straps (sold separately).*

11. **DISTANCE BAR:** Every bar indicates 100 meter or 0.1 mile.

CONSOLE FUNCTIONS - CONTINUED

KEY FUNCTIONS

There are 6 button keys. The function description is listed below:

1. **START/STOP key:**
a. Quick Start function: Allows you to start the computer without selecting a program. Manual workout only. Time automatically begins to count up from zero
b. During the exercise mode, press the key to STOP exercise.
c. During the stop mode, press the key to START exercise.

2. **UP key**:
a. Press the key to increase the resistance during exercise mode.
b. During the setting mode, press the key to increase the value of Time, Distance, Calories, Age and select Gender and Program.

3. **DOWN key:**
a. Press the key to decrease the resistance during exercise mode.
b. During the setting mode, press the key to decrease the value of Time, Distance, Calories, Age and select Gender and Program.

4. **ENTER key:**
a. During the setting mode, press the key to accept the current data entry.
b. At the stop mode, by holding this key for over two seconds the user can reset all values to zero or default value.
c. When setting the clock, press this key to accept the hour or minute setting.

5. **BODY FAT key:**
Press the key to input your HEIGHT, WEIGHT, GENDER, and AGE in order to measure your body fat ratio.

6. **PULSE RECOVERY key:**
Press the key to activate heart rate recovery function.

CONSOLE FUNCTIONS - CONTINUED

PROGRAM SELECT AND SETTING VALUE

1. Use the UP or DOWN keys to select program mode and then press ENTER to confirm your exercise mode.
2. At the Manual mode, the computer will use the UP or DOWN keys to set up your exercise TIME, DISTANCE, CALORIES, PULSE.
3. Press the START/STOP key to start exercise.
4. When you reach the target, the computer will produce beep sounds and then stop.
5. If you set up more than one target and you would like to reach next target, press START/STOP key to keep on exercise.

WAKE-UP FUNCTION

The monitor will enter SLEEP mode (LCD off) when there is no signal input and no key has been pressed for 4 minutes. Press any key to start the monitor.

MANUAL

Manual Mode

P1 is a manual program. Users may adjust their workout to the desired resistance level (press UP/DOWN keys during the workout) with a period of time, number of calories, or a certain distance.

1. Use UP/DOWN keys to select the MANUAL (P1) program.
2. Press the ENTER key to enter MANUAL program.
3. The TIME will flash and you can press UP or DOWN keys to set your exercise TIME. Press ENTER key to confirm your desired TIME.
4. The DISTANCE will flash and you can press UP or DOWN keys to set your target DISTANCE. Press ENTER key to confirm your desired DISTANCE.
5. The CALORIES will flash and you can press UP or DOWN keys to set your exercise CALORIES. Press ENTER key to confirm your desired CALORIES.
6. The PULSE will flash and then you can press UP or DOWN keys to set your exercise PULSE. Press ENTER key to confirm your desired Pulse.
7. Press the START/STOP key to begin exercise.

PROGRAMS

Program Mode

Preset Program: **Steps, Hill, Rolling, Valley, Fat Burn, Ramp, Mountain, Intervals, Random, Plateau, Fartlek, Precipice Program**

PROGRAM 2 to PROGRAM 13 are the preset programs. Users can exercise with different levels of loading in different intervals as the profiles on the following page show. Users may adjust their workout to the desired resistance level (press UP/DOWN keys during the workout) with a period of time, number of calories, or a certain distance.

1. Use UP/DOWN keys to select one of the above programs from P2 to P13.
2. Press the ENTER key to enter your workout program.
3. The TIME will flash and you can press UP or DOWN keys to setting your exercise TIME. Press ENTER key to confirm your desired TIME.
4. The DISTANCE will flash and you can press UP or DOWN keys to setting your target DISTANCE. Press ENTER key to confirm your desired DISTANCE.
5. The CALORIES will flash and you can press UP or DOWN keys to setting your exercise CALORIES. Press ENTER key to confirm your desired CALORIES.
6. The PULSE will flash and then you can press UP or DOWN keys to set your exercise PULSE. Press ENTER key to confirm your desired Pulse.
7. Press the START/STOP key to begin exercise.

PRESET PROGRAMS

PROGRAM 1

MANUAL

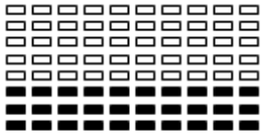

PROGRAM 2

STEPS

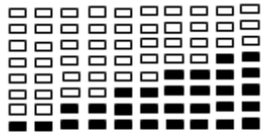

PROGRAM 3

HILL

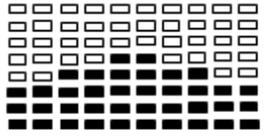

PROGRAM 4

ROLLING

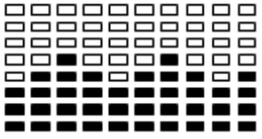

PROGRAM 5

VALLEY

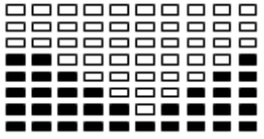

PROGRAM 6

FAT BURN

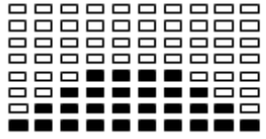

PROGRAM 7

RAMP

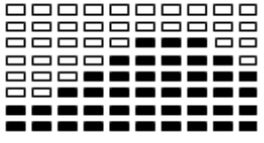

PROGRAM 8

MOUNTAIN

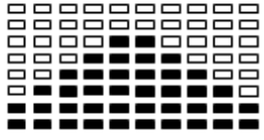

PROGRAM 9

INTERVALS

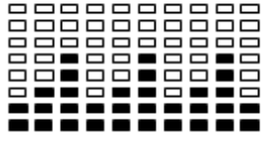

PROGRAM 10

RANDOM

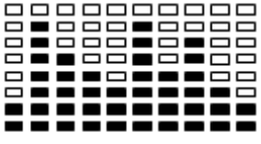

PROGRAM 11

PLATEAU

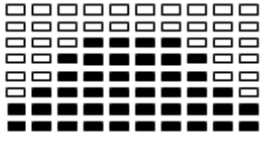

PROGRAM 12

FARTLEK

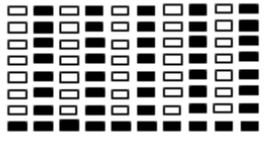

PROGRAM 13

PRECIPICE

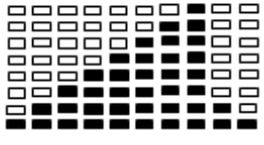

CUSTOM USER PROGRAMS

User 1, 2, 3, 4

Program 14 to 17 is the user setting program. Users are free to create the values in the order of TIME, DISTANCE, CALORIES and the resistance level in 10 columns. The values and profiles will be stored in the memory after setup. Users may also change the ongoing loading in each column by UP/DOWN keys, and they will not change the resistance level stored in the memory.

1. Use UP/DOWN keys to select the USER program from P14 to P17.
2. Press the ENTER key to enter your workout program.
3. The column 1 will flash, and then use the UP/DOWN keys to create your personal exercise profile. Press ENTER to confirm your first column of exercise profile. The default level is load 1.
4. The column 2 will flash, and then use the UP/DOWN keys to create your personal exercise profile. Press ENTER to confirm your second column of exercise profile.
5. Follow the above description 3 and 4 to finish your personal exercise profiles. Press ENTER to confirm your desired exercise profile.
6. The TIME will flash and you can press UP or DOWN keys to setting your exercise TIME. Press ENTER key to confirm your desired TIME.
7. The DISTANCE will flash and you can press UP or DOWN keys to setting your target DISTANCE. Press ENTER key to confirm your desired DISTANCE.
8. The CALORIES will flash and you can press UP or DOWN keys to setting your exercise CALORIES. Press ENTER key to confirm your desired CALORIES.
9. The PULSE will flash and then you can press UP or DOWN keys to set your exercise PULSE. Press ENTER key to confirm your desired Pulse.
10. Press the START/STOP key to begin exercise.

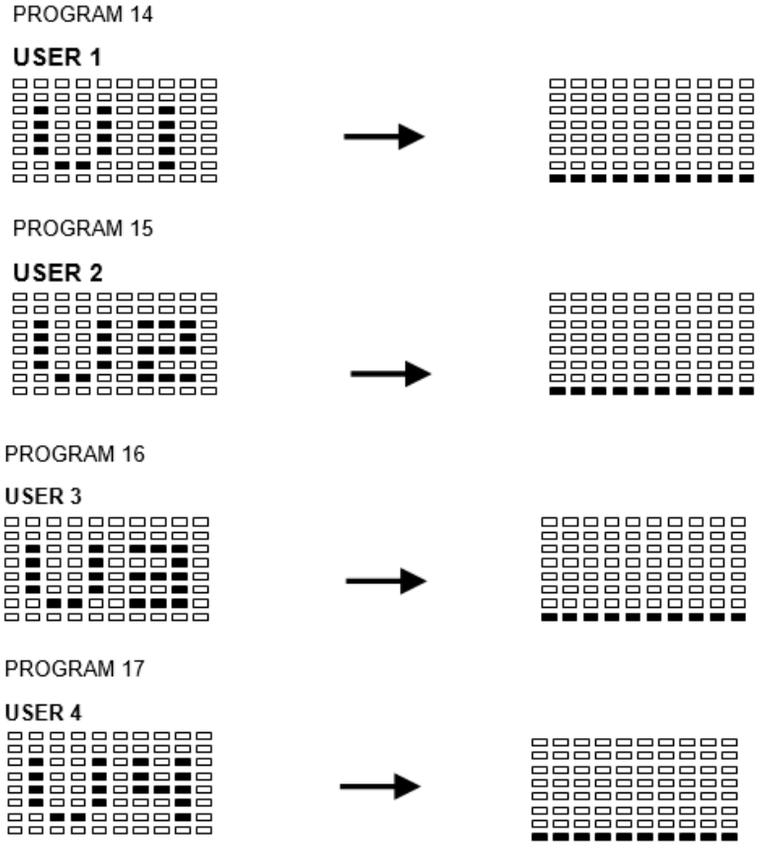

HEART RATE CONTROL PROGRAMS

55%, 65%, 75%, 85% HRC, Target HRC

Program 18 to Program 22 are the Heart Rate Control Programs. Program 22 is the Target Heart Rate Control Program.

- Program 18 is the 55% Max H.R.C. - - Target H.R. = (220 – AGE) x 55%
- Program 19 is the 65% Max H.R.C. - - Target H.R. = (220 – AGE) x 65%
- Program 20 is the 75% Max H.R.C. - - Target H.R. = (220 – AGE) x 75%
- Program 21 is the 85% Max H.R.C. - - Target H.R. = (220 – AGE) x 85%
- Program 22 is the Target H.R.C. - - Workout by your target heart rate value.

Users can exercise according to your desired Heart Rate program by setting your AGE,TIME,DISTANCE, CALORIES or TARGET PULSE. In these programs, the computer will adjust the resistance level according to the heart rate detected. For example, the resistance level may increase every 20 seconds while the heart rate detected is lower than the TARGET H.R.C. Also the resistance level may decrease every 20 seconds while the heart rate detected is higher than the TARGET H.R.C.

1. Use UP/DOWN keys to select one of the heart rate control program from P18 to P22.
2. Press the ENTER key to enter your workout program
3. The AGE will flash at P18 to P21 programs and you can press UP or DOWN keys to set your AGE. The default age is 35.
4. At program 22, the TARGET PULSE will flash and you can press UP or DOWN keys to set your TARGET PULSE between 80 to 180. The default TARGET PULSE is 120.
5. The TIME will flash and you can press UP or DOWN keys to set your exercise TIME. Press ENTER key to confirm your desired TIME.
6. The DISTANCE will flash and you can press UP or DOWN keys to set your target DISTANCE. Press ENTER key to confirm your desired DISTANCE.
7. The CALORIES will flash and you can press UP or DOWN keys to set your exercise CALORIES. Press ENTER key to confirm your desired CALORIES.
8. Press the START/STOP key to begin exercise.

PROGRAM 18

55% H.R.C.



PROGRAM 19

65% H.R.C.

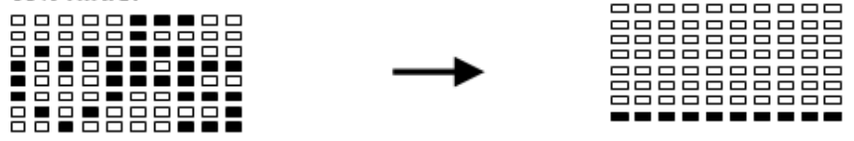

PROGRAM 20

75% H.R.C.



PROGRAM 21

85% H.R.C.



PROGRAM 22

TARGET H.R.C.



WATT CONTROL PROGRAM

Program 23 is a Speed Independent Program. Press ENTER key to set up the values of TARGET WATT, TIME, DISTANCE and CALORIES. During the exercise mode, the level of resistance is not adjustable. For example, the level of resistance may increase while the speed is too slow. Also the level of resistance may decrease while the speed is too fast. As a result, the calculated value of WATT will close to the value of TARGET WATT setup by users.



1. Use UP or DOWN key to select the WATT CONTROL (P23) program.
2. Press ENTER key to enter your workout program.
3. The TIME will flash and you can press UP or DOWN key to set your exercise TIME. Press ENTER key to confirm your desired TIME.
4. The DISTANCE will flash and you can press UP or DOWN key to set your target DISTANCE. Press ENTER key to confirm your desired DISTANCE.
5. The WATT will flash and you can press UP or DOWN key to set your target WATT value. Press ENTER key to confirm your target WATT. The default WATT value is 100.
6. The CALORIES will flash and you can press UP or DOWN key to set your exercise CALORIES. Press ENTER key to confirm your desired CALORIES.
7. The PULSE will flash and then you can press UP or DOWN keys to set your exercise PULSE. Press ENTER key to confirm your desired Pulse.
8. Press the START/STOP key to begin exercise.

NOTE:

- WATT = TORQUE (KGM) * RPM * 1.03
- In this program, the WATT value will keep constant value. It means that if you peddle quickly, the resistance level will decrease and if you peddle slowly, the resistance level will increase. Always try to keep you in the same watt value.

BODY FAT

Program 24 is a special program design to calculate users' body fat ratio and to offer a specific loading profile for users. There are 3 body types divided according to the FAT% calculated.
Type1: BODY FAT% > 27
Type2: 27 ≥ BODY FAT% ≥ 20
Type3: BODY FAT % < 20
The computer will show the test results of FAT PERCENT

1. Use UP/DOWN keys to select the BODY FAT (P24) program.
2. Press the ENTER key to enter your workout program.
3. The HEIGHT will flash and you can press UP or DOWN keys to set your HEIGHT. Press ENTER key to confirm your HEIGHT. The default HEIGHT is 170cm or 5'07" (5feet 7 inches).
4. The WEIGHT will flash and you can press UP or DOWN keys to set your WEIGHT. Press ENTER key to confirm your WEIGHT. The default WEIGHT is 70kgs or 155lbs.
5. The GENDER will flash and you can press UP or DOWN keys to select your sex. Number 1 means man and number 0 means female. Press ENTER key to confirm your Gender. The default sex is 1 (MAN).
6. The AGE will flash and you can press UP or DOWN keys to set your AGE. Press ENTER key to confirm your AGE. The default AGE is 35.
7. Press the START/STOP key to begin body fat measurement. If the window shows E, make sure your hands are correctly gripping the pulse grips or the bluetooth chest strap (sold separately) is attached correctly. Then press the START/STOP key again to begin body fat measurement.
8. After finishing your measurement, the computer will show the values of FAT PERCENT on the LCD display.
9. Press START/STOP key to begin exercise.

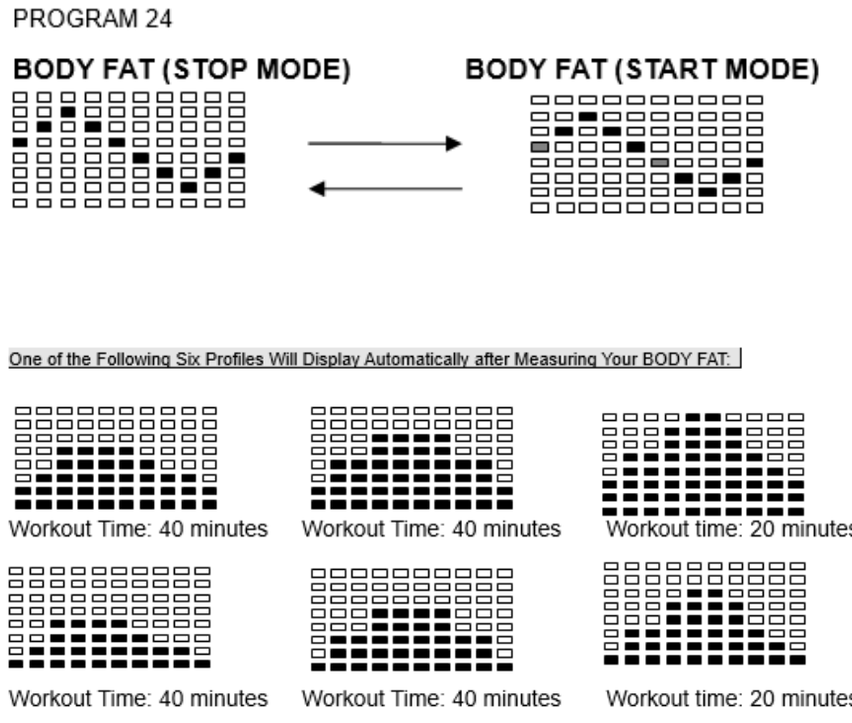

HEART RATE EXERTION

The old motto, “no pain, no gain”, is a myth that has been overpowered by the benefits of exercising comfortably. A great deal of this success has been promoted by the use of heart rate monitors. With the proper use of a heart rate monitor, many people find that their usual choice of exercise intensity was either too high or too low and exercise is much more enjoyable by maintaining their heart rate in the desired benefit range.

To determine the benefit range in which you wish to train, you must first determine your Maximum Heart Rate. This can be accomplished by using the following formula: 220 minus your age. This will give you the Maximum Heart Rate (MHR)for someone of your age. To determine the effective heart rate range for specific goals you simply calculate a percentage of your MHR. Your Heart rate training zone is 50% to 90% of your maximum heart rate. 60% of your MHR is the recommended for burning fat while 80% is recommended for strengthening the cardio vascular system. This 60% to 80% is the zone to stay in for maximum benefit.

For someone who is 40 years old their
target heart rate zone is calculated:
220 – 40 = 180 (maximum heart rate)
180 x 0.6 = 108 beats per minute (60% of maximum)
180 X 0.8 = 144 beats per minute (80% of maximum)
So for a 40 year old the training zone would
be 108 to 144 beats per minute.

If you enter your age during programming the console will perform this calculation automatically. Entering your age is used for the Heart Rate programs. After calculating your MHR you can decide upon which goal you would like to pursue.

The two most popular reasons for, or goals, of exercise are cardiovascular fitness (training for the heart and lungs) and weight control. The black columns on the chart represent the MHR for a person whose age is listed at the bottom of each column. The training heart rate, for either cardiovascular fitness or weight loss, is represented by two different lines that cut diagonally through the chart. A definition of the lines’ goal is in the bottom left-hand corner of the chart. If your goal is cardiovascular fitness or if it is weight loss, it can be achieved by training at 80% or 60%, respectively, of your MHR on a schedule approved by your physician. Consult your physician before participating in any exercise program.

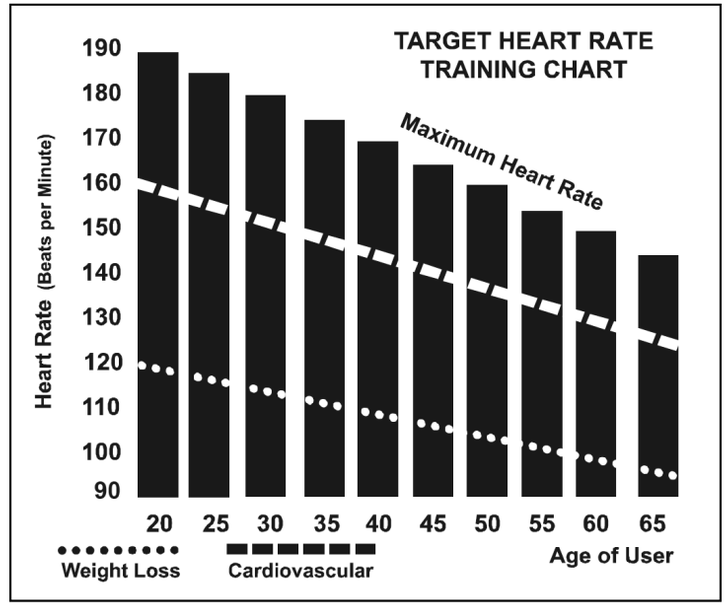

HEART RATE - PERCEIVED EXERTION

Heart rate is important but listening to your body also has a lot of advantages. There are more variables involved in how hard you should workout than just heart rate. Your stress level, physical health, emotional health, temperature, humidity, the time of day, the last time you ate and what you ate all contribute to the intensity at which you should workout. If you listen to your body it will tell you all of these things.

The rate of perceived exertion (RPE), also known as the Borg scale, was developed by Swedish physiologist G.A.V. Borg.
This scale rates exercise intensity from 6 to 20 depending upon how you feel or the perception of your effort.
The scale is found to the side of the page:

You can get an approximate heart rate level for each rating by simply adding a zero to each rating. For example a rating of 12 will result in an approximate heart rate of 120 beats per minute. Your RPE will vary depending on the factors discussed earlier. If your body is strong and rested, you will feel strong and your pace will feel comfortable. When your body is in this condition, you are able to train harder and the RPE will support this. If you are feeling tired and sluggish, it is because your body needs a break. In this condition, your pace will feel difficult. Again, this will show up in your RPE and you will train at the proper level for that day.

Rating Perception of Effort

6	Minimal
7	Very, Very Light
8	Very, Very Light +
9	Very Light
10	Very Light +
11	Fairly Light
12	Comfortable
13	Somewhat Hard
14	Somewhat Hard +
15	Hard
16	Hard +
17	Very Hard
18	Very Hard +
19	Very, Very Hard
20	Maximal

MAINTENANCE & CARE

Post-Workout Machine Care

1. Store your machine in a dry and clean area when not in use.
2. Use a slightly damp cloth to clean areas where sweat or oil made contact with the machine.
3. Use a microfiber cloth to clean the display and remove unwanted oils and other things that may damage the screen.
4. Avoid leaving paper or other small debris in the cupholders.

Sanitizing Your XTERRA Fitness Equipment

- Unupholstered high-contact surfaces (hard plastics) can be sanitized using a 75% isopropyl alcohol solution and a clean, dry cloth. Spray surfaces to be sanitized, and use the dry cloth to wipe clean. Allow surfaces to dry before using.
- For upholstered or soft-plastic surfaces, use a conditioner after sanitizing. Be sure to follow the instructions provided by the conditioner manufacturer to ensure proper use of the conditioner.
- Alternatively, you can make your own spray by mixing the proper ratio of isopropyl alcohol and distilled water to reach a 75% solution.

EXPLODED VIEW DIAGRAM

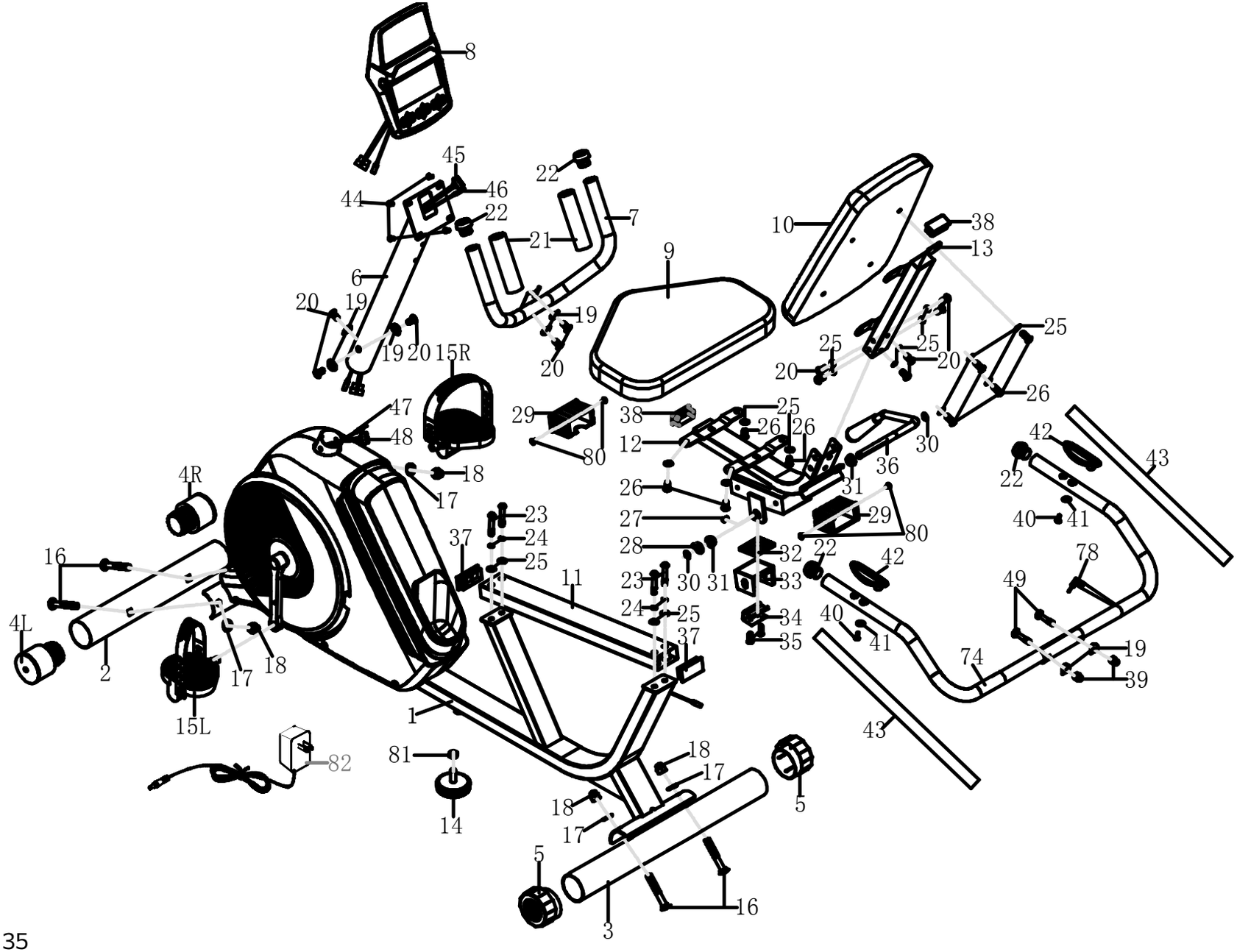

EXPLODED VIEW DIAGRAM

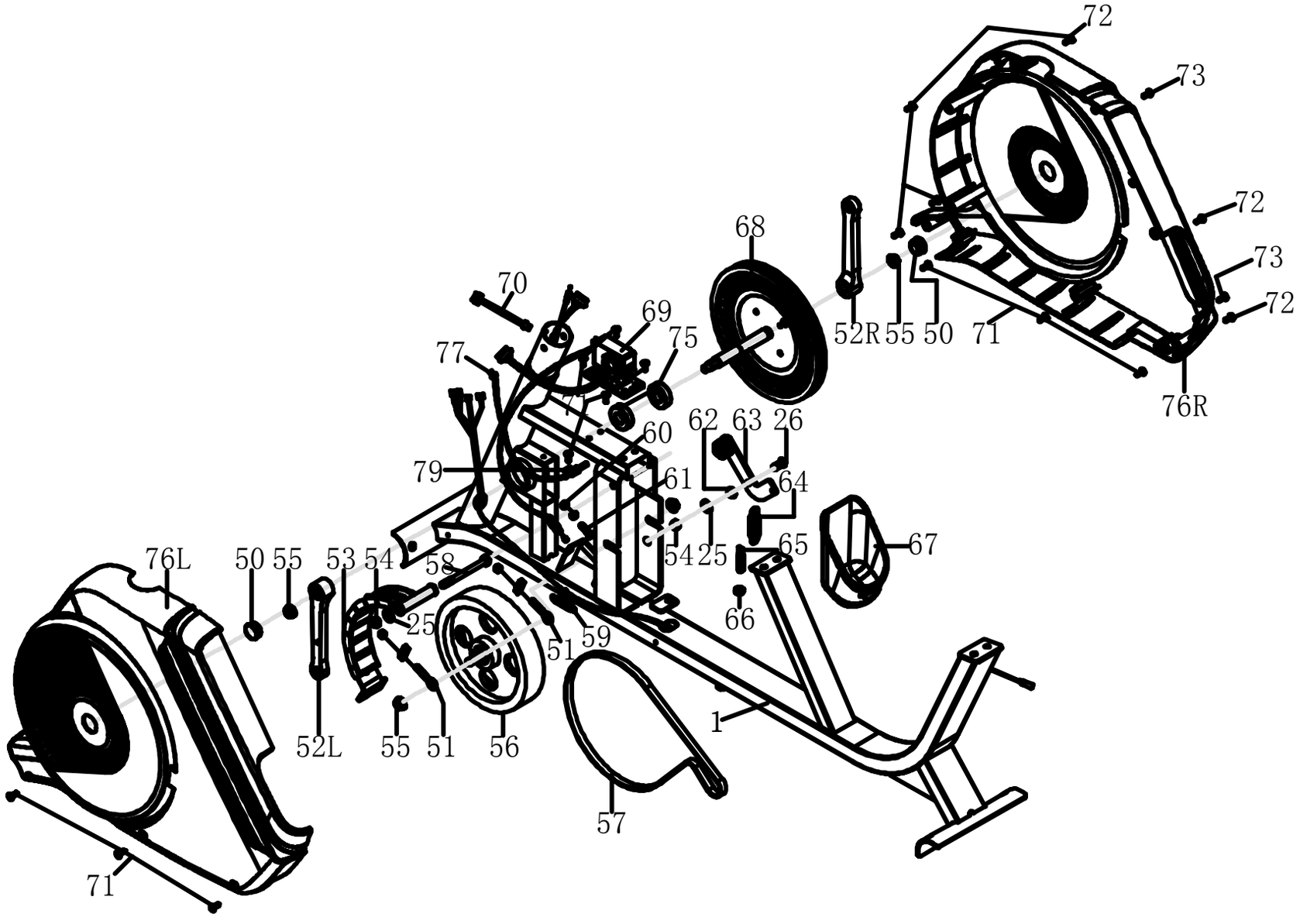

WARRANTY - RESIDENTIAL

Effective August 01, 2023- **SB240 Recumbent Bike LIMITED WARRANTY**

XTERRA Fitness Inc. warrants all its home use Recumbent Bike parts for a period of time listed below, from the date of retail sale, as determined by a sales receipt or in the absence of a sales receipt, eighteen (18) months from the original factory shipping date. XTERRA Fitness's responsibilities include providing new or remanufactured parts, at XTERRA Fitness's option, and technical support to our independent dealers and servicing organizations. In the absence of a dealer or service organization, these warranties will be administered by XTERRA Fitness directly to a consumer. The warranty period applies to the following components:

Home Use Limited Warranty

Warranty	Parts
Residential	1 Year

RESPONSIBILITIES OF THE CONSUMER

This warranty applies only to products in ordinary household use, and the consumer/facility is responsible for the items listed below:

1. Proper use of the Recumbent Bike in accordance with the instructions provided in this manual
2. Proper installation in accordance with instructions provided with the Recumbent Bike and with all local electric codes.
3. Expenses for making the Recumbent Bike accessible for servicing, including any item that was not part of the Recumbent Bike at the time it was shipped from the factory.
4. Damages to the Recumbent Bike finish during shipping, installation or following installation.
5. Routine maintenance of this unit as specified in this manual.

WARRANTY - CONTINUED

What is not covered?

EXCLUSIONS

This warranty does not cover the following:

1. CONSEQUENTIAL, COLLATERAL, OR INCIDENTAL DAMAGES SUCH AS PROPERTY DAMAGE AND INCIDENTAL EXPENSES RESULTING FROM ANY BREACH OF THIS WRITTEN OR ANY IMPLIED WARRANTY.
   Note: Some states do not allow the exclusion or limitation of incidental or consequential damages, so this limitation or exclusion may not apply to you.
2. Service call reimbursement to the consumer. Service call reimbursement to the dealer that does not involve malfunction or defects in workmanship or material, for units that are beyond the warranty period, for units that are beyond the service call reimbursement period, for Recumbent Bike not requiring component replacement, or Recumbent Bike not in ordinary household or light commercial use.
3. Damages caused by services performed by persons other than authorized XTERRA Fitness service companies; use of parts other than original XTERRA Fitness parts; or external causes such as corrosion, discoloration of paint or plastic, alterations, modifications, abuse, misuse, accident, improper maintenance, inadequate power supply, or acts of God.
4. Products with original serial numbers that have been removed or altered.
5. Products that have been: sold, transferred, bartered, or given to a third party.
6. XTERRA Fitness reserves the right to request proof of purchase if no warranty record exists for the product.
7. THIS WARRANTY IS EXPRESSLY IN LIEU OF ALL OTHER WARRANTIES EXPRESSED OR IMPLIED, INCLUDING THE WARRANTIES OF MERCHANTABILITY AND/OR FITNESS FOR A PARTICULAR PURPOSE.
8. Product use in any environment other than a residential setting or non-dues paying facility with 5 hours use or less per day.
9. Warranties outside of the United States may vary. Please contact your local dealer for details.

Product features or specifications as described or illustrated are subject to change without notice. All warranties are made by XTERRA Fitness, Inc. This warranty applies only in the 48 contiguous United States. NOTE: This does not include Alaska or Hawaii.

WARRANTY - CONTINUED

Responsibilities of the Owner

SERVICE

Keep your bill of sale. Twelve (12) months from the date on the bill of sale or eighteen (18) months from the date of factory shipping as determined by the serial number establishes the labor warranty period should service be required. If service is performed, it is in your best interest to obtain and keep all receipts. This written warranty gives you specific legal rights. You may also have other rights that vary from state to state. Service under this warranty must be obtained by following these steps, in order:

1. Contact your selling authorized XTERRA Fitness dealer. OR
2. Contact your local authorized XTERRA Fitness service organization.
3. If there is a question as to where to obtain service, contact our service department at (870) 935-1107.
4. XTERRA Fitness' obligation under this warranty is limited to repairing or replacing, at XTERRA Fitness' option, the product through one of our authorized service centers. All repairs must be preauthorized by XTERRA Fitness. If the product is shipped to a service center freight charges to and from the service center will be the customer's responsibility. For replacement parts shipped while the product is under warranty, the customer will be responsible for shipping and handling charges. For in-home service, the customer will be responsible for a trip charge. There will be an additional trip charge if the customer is located over 100 miles from the nearest service center.
5. The owner is responsible for adequate packaging upon return to XTERRA Fitness. XTERRA Fitness is not responsible for damages in shipping. Make all freight damage claims with the appropriate freight carrier. DO NOT SHIP ANY UNIT TO OUR FACTORY WITHOUT A RETURN AUTHORIZATION NUMBER. All units arriving without a return authorization number will be refused.

For any further information, or to contact our service department by mail, send your correspondence to:

XTERRA Fitness, Inc.

P.O. Box 2037

Jonesboro, AR 72402-2037

Product features or specifications as described or illustrated are subject to change without notice. All warranties are made by XTERRA Fitness, Inc. This warranty applies only in the 48 contiguous United States. NOTE: This does not apply to Alaska or Hawaii.

ERROR MESSAGES

E1 (ERROR 1):
Normal state:
During workout, when the monitor did not get the count signal from the gear motor more than 4 seconds and check under successive 3 times then the LCD will show E1.

Power on state:
The gear motor will return to zero automatically, when the signal of motor cannot be detected for more than 4 seconds then the gear motor's driver will be cut off immediately and show the E1 on the LCD display. All the other digital and function mark are blank, and the output signals are cut off also.

E2 (ERROR 2):
When the monitor read the memory data, if the I.D. code is not correct or the memory IC damages then the monitor will show E2 immediately at power on.

E3 (ERROR 3):
After 4 seconds by start mode, the computer detects the faulty motor did not leave the zero point then the LCD bar displays "E3".

3000 Nestle Road Jonesboro, AR 72401 | Phone: 800-258-8511 | Fax: 870-935-7611

©2023 All Rights Reserved. SB240 Owner's Manual