XTERRA FITNESS

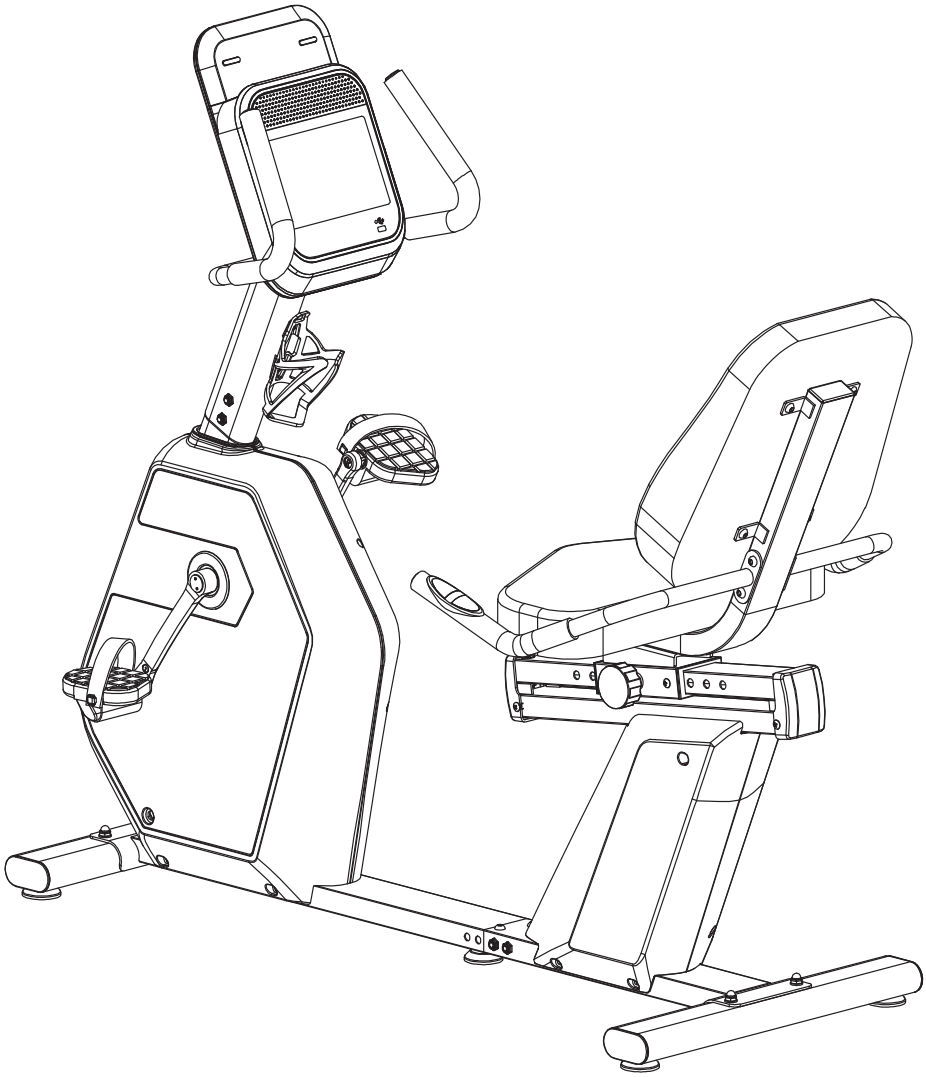

SB**4500** FITNESS BIKE
OWNER'S MANUAL

PLEASE CAREFULLY READ THIS ENTIRE MANUAL BEFORE OPERATING YOUR NEW FITNESS BIKE

Table Of Contents

Product Registration	**1**
Important Safety Instructions	**2**
Important Electrical Instructions	**3**
Important Operation Instructions	**3**
SB4500 Assembly Instructions	**4**
Operation of Your Console	**11**
Programs	**16**
Bluetooth Capabilities	**19**
Heart Rate Monitoring	**20**
General Maintenance	**23**
Manufacturer's Limited Warranty	**24**
Exploded View	**25**
Parts List	**26**

ATTENTION

THIS FITNESS BIKE IS INTENDED FOR **RESIDENTIAL USE ONLY** AND IS WARRANTED FOR THIS APPLICATION. ANY OTHER APPLICATION **VOIDS** THIS WARRANTY IN ITS ENTIRETY.

Congratulations On Your New Fitness Bike and Welcome to the XTERRA Fitness Family!

Thank you for your purchase of this quality fitness bike from **XTERRA Fitness**. Your new fitness bike has been manufactured by one of the leading fitness manufacturers in the world. **XTERRA Fitness** will do all we can to make your ownership experience as pleasant as possible for many years to come. If you have questions, or if parts are missing or damaged, or you require customer service, call (870)336-4286. Please have your model number and serial number handy when you call.

Please take a moment to record where you purchased your machine, as well as the date of purchase for future reference. We appreciate your confidence in **XTERRA Fitness** and we will always remember that you are the reason that we are in business. Please complete and mail your registration card today and enjoy your new fitness bike.

Yours in Health,
XTERRA Fitness

Purchase Location _____

Purchase Date _____

Product Registration

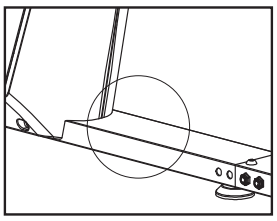

Record Your Serial Number
Please record the Serial Number of this fitness product in the space provided below.

Serial Number _____

Register Your Purchase
The self-addressed product registration card must be completed in full and returned to **XTERRA Fitness**. You can also go to ***www.xterrafitness.com/warranty*** to register online.

Important Safety Instructions

When using an electrical appliance, basic precautions should always be followed, including the following:

Read all instructions before using this appliance.

DANGER - To reduce the risk of electric shock:

1. Always unplug this appliance from the electrical outlet immediately after using and before cleaning.

WARNING - To reduce the risk of burns, fire electric shock, or injury to persons:

1. An appliance should never be left unattended when plugged in. Unplug from outlet when not in use, and before putting on or taking off parts.
2. Do not operate under blanket or pillow. Excessive heating can occur and cause fire, electric shock, or injury to persons.
3. This exercise equipment is not intended for use by persons with reduced physical, sensory or mental capabilities, or lack of experience and knowledge.
4. Use this appliance only for its intended use as described in this manual. Do not use attachments not recommended by the manufacturer.
5. Never operate this appliance if it has a damaged cord or plug, if it is not working properly, if it has been dropped or damaged, or dropped into water. Return the appliance to a service center for examination and repair.
6. Do not carry this appliance by supply cord or use cord as a handle.
7. Keep the cord away from heated surfaces.
8. Never operate the appliance with the air openings blocked. Keep the air openings free of lint, hair, and the like.
9. Never drop or insert any object into any opening.
10. Do not use outdoors.
11. Do not operate where aerosol (spray) products are being use or where oxygen is being administered.
12. Connect this appliance to a properly grounded outlet only.
13. The appliance is intended for household use.



WARNING: This product can expose you to chemicals including Toluene and Acrylamide which are known to the State of California to cause cancer and birth defects or other reproductive harm.
For more information go to www.P65Warnings.ca.gov

Fitness Equipment Safety Instructions

- To disconnect, turn all controls to the off position, then remove the plug from the outlet.
- Do not operate equipment on deeply padded, plush or shag carpet. Damage to both carpet and equipment may result.
- Before beginning this or any exercise program, consult a physician. This is especially important for persons over the age of 35 or persons with pre-existing health conditions.
- Keep hands away from all moving parts.
- The pulse sensors are not medical devices. Various factors, including the user's movement, may affect the accuracy of heart rate readings. The pulse sensors are intended only as exercise aids in determining heart rate trends in general.
- Do not attempt to use your equipment for any purpose other than for the purpose it is intended.
- Wear proper shoes. High heels, dress shoes, sandals or bare feet are not suitable for use on your equipment. Quality athletic shoes are recommended to avoid leg fatigue.

Failure to follow all guidelines may compromise the effectiveness of the exercise experience, expose yourself (and possibly others) to injury, and reduce the longevity of the equipment.

SAVE THESE INSTRUCTIONS - THINK SAFETY!

CAUTION!! Please be careful when unpacking the carton.

Important Electrical Instructions

WARNING!

- **NEVER** remove any cover without first disconnecting AC power supply.
- If A.C. voltage varies by ten percent (10%) or more, the performance of your fitness bike may be affected. Such conditions are not covered under your warranty. If you suspect the voltage is low, contact your local power company or a licensed electrician for proper testing.
- **NEVER** expose this fitness bike to rain or moisture. This product is NOT designed for use outdoors, near a pool or spa, or in any other high humidity environment. Maximum environmental ratings are 40-120 degrees Fahrenheit, 95% humidity non-condensing (no water droplets forming on surfaces).

Important Operation Instructions

- **NEVER** operate this fitness bike without reading and completely understanding the results of any operational change you request from the computer.
- Understand that changes in resistance do not occur immediately. Set your desired level on the computer console and release the adjustment key. The computer will obey the command gradually.
- **NEVER** use your fitness bike during an electrical storm. Surges may occur in your household power supply that could damage fitness bike components.
- Use caution while participating in other activities while using your fitness bike such as watching television, reading, etc. These distractions may cause you to lose balance, resulting in serious injury.

SB**4500** Assembly Pack Checklist

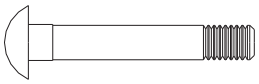

57# 、 Carriage Bolt：
M8*50MM(4pcs)



54#、Cup Washer M8 (1pcs)



39#、Phillips Head
Screw：M5*15MM(6pcs)



58#、Flat Washer：
Φ8*Φ16*1.5t(4pcs)

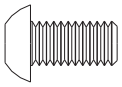

36#、Phillips Head
Screw：M8*15MM(18pcs)

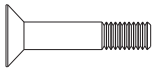

52#、Flat Head Socket
Screw M8*40MM(4pcs)



59#、Cap Nut：M8(4pcs)



55#、Flat Washer：
Φ8*Φ21*2.0t(4pcs)

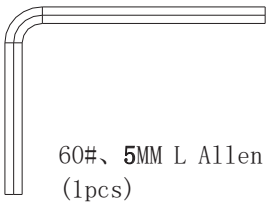

60#、5MM L Allen Wrench
(1pcs)

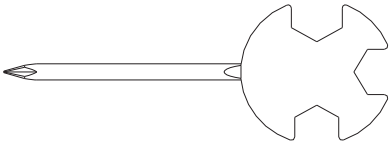

61# 、 Philips Head
Screwdriver +13、14、15
Wrench (1pcs)

SB**4500** Assembly Instructions

1 Front Stabilizer

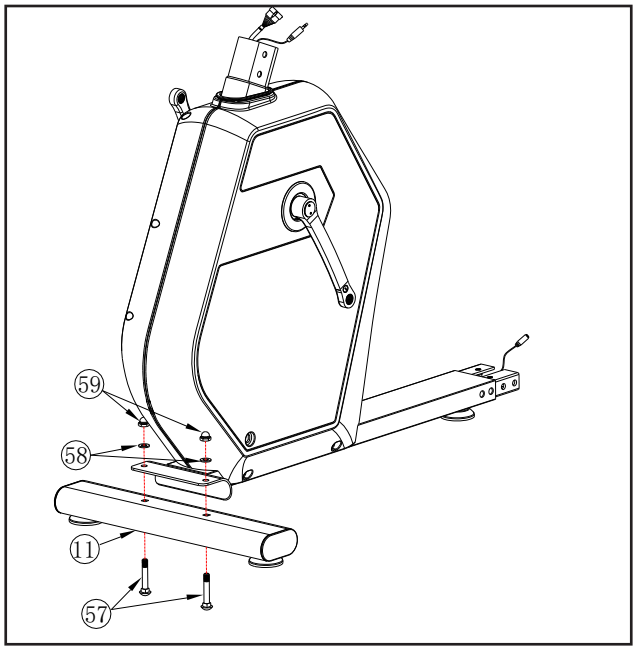

Hardware Step 1

#57 M8 x 50mml Carriage Bolt (2 pcs),
#58 φ8 x 16 x 1.5t Flat Washer (2 pcs),
#59 M8 Cap Nut (2 pcs)

1. Install the **Front Stabilizer Tube (No. 11)** onto the **Main Frame** and secure using 2 **Carriage Bolts (No. 57)**, 2 **Flat Washers (No. 58)**, and 2 **Cap Nuts (No. 59).**

2 Rear Stabilizer

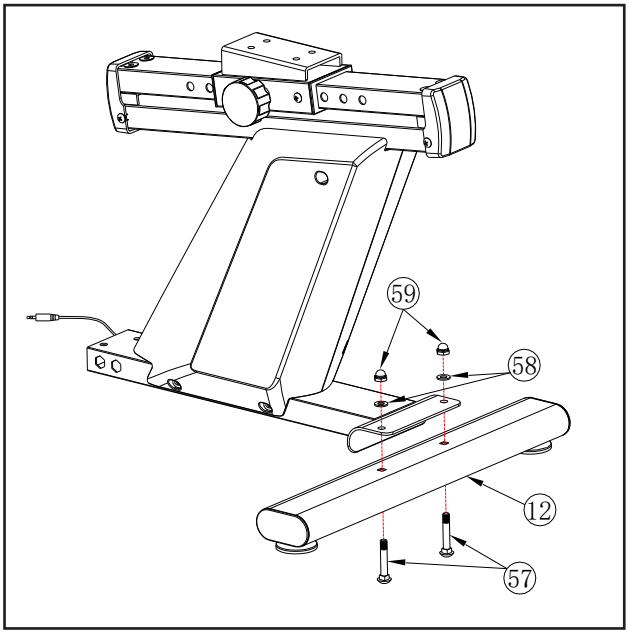

Hardware Step 2

#57 M8 x 50mml Carriage Bolt (2 pcs),
#58 φ8 x 16 x 1.5t Flat Washer (2 pcs),
#59 M8 Cap Nut (2 pcs)

1. Install the **Rear Stabilizer Tube (No. 12)** onto the **Main Frame** and secure using 2 **Carriage Bolts (No. 57)**, 2 **Flat Washers (No. 58)**, and 2 **Cap Nuts (No. 59).**

3 Connecting the Main Frame

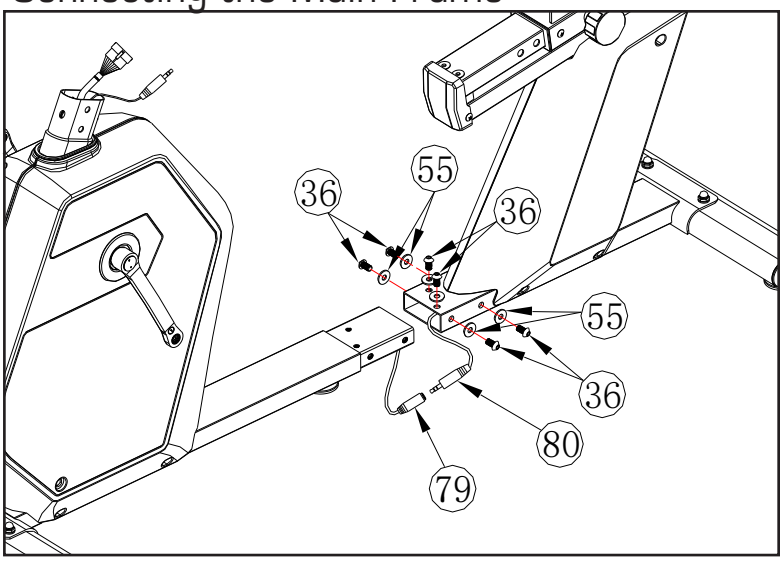

Hardware Step 3

#55. φ8 x 21 x 2t Flat Washer (2 pcs)

#36. M8 x 15mm Philips Head Screw (2 pcs)

1. Connect the two **Handpulse Wires (No. 79 & 80)** together. Be careful not to pinch the wires and feed them back into the connected frame.
2. Assemble the **Front Main Frame (No.1)** to the **Rear Main Frame (No.2)** using 2 **Flat Washers (No. 55)**.
3. Secure on top with 2 **Philips Head Screws (No.36)**.

4 Console Mast

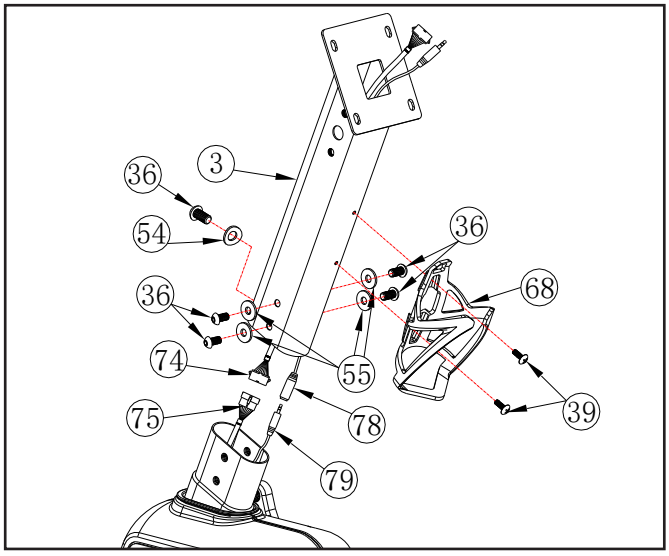

Hardware Step 4

#55. φ8 x 21 x 2t Flat Washer (2pcs)

#39. M5 x 15mm Phillips Head Screw (2 pcs)

#54. Cup Washer M8 (1 pc)

1. Run the two **Cables (No. 74 & 78)** through the **Console Mast (No. 3)**. Connect the two **Computer Cables (No. 74 & 75)** and two **Handpulse Wires (No. 78 & 79)** together.
2. Secure the **Console Mast (No. 3)** to the **Main Frame** using 2 **Phillips Head Screws (No.36)**, 2 **Flat Washers (No. 55)**, and 1 **Cup Washer (No. 54)**.
3. Secure the **Drink Bottle Holder (No. 68)** to the **Console Mast (No.3)** using 2 **Philips Head Screws (No. 39)**.

5 Console

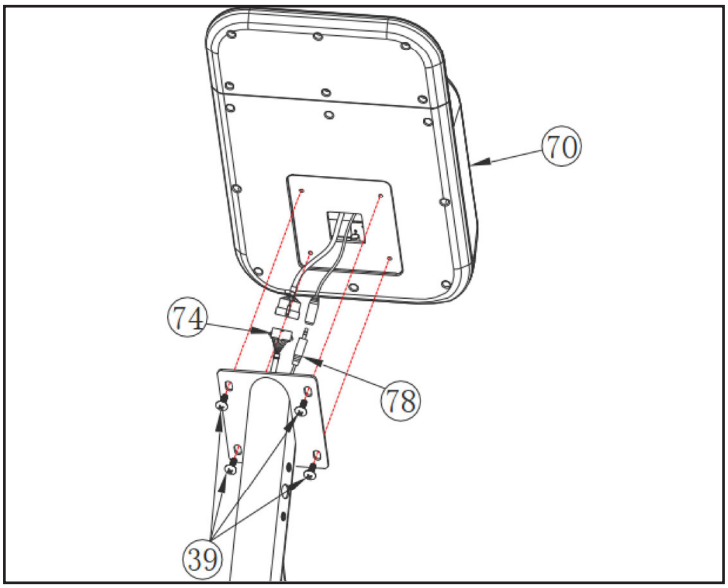

Hardware Step 5

#39. M5 x 15
Philips Head Screws (4 pcs)

1. Connect the **Computer Cable (No. 74)** with the **Handpulse Wire (No. 78).** Feed the excess wire into the tube. Be careful not to pinch the wires.
2. Secure the **Console (No. 70)** to the Mast using 4 **Philips Head Screws (No. 39).**

6 Front Handlebars

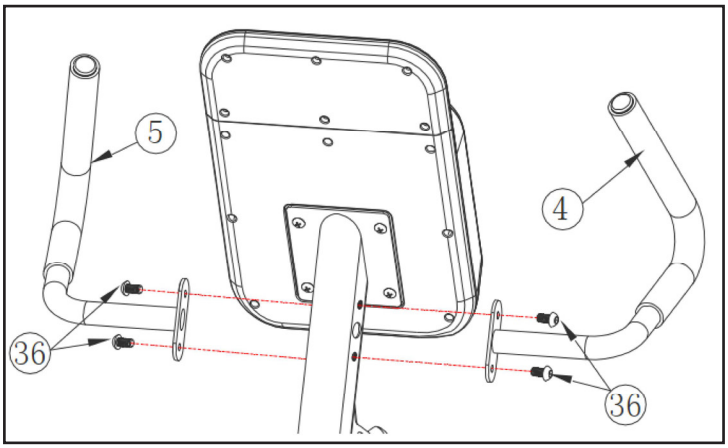

Hardware Step 6

#36. M8 x 15
Philips Head Screws (4 pcs)

1. Secure the **Mast Handle Bar – L (No.4)** and the **Mast Handle Bar – R (No.5)** using 4 **Phillips Head Screws (No.36)**.

7 Seat Back Bracket

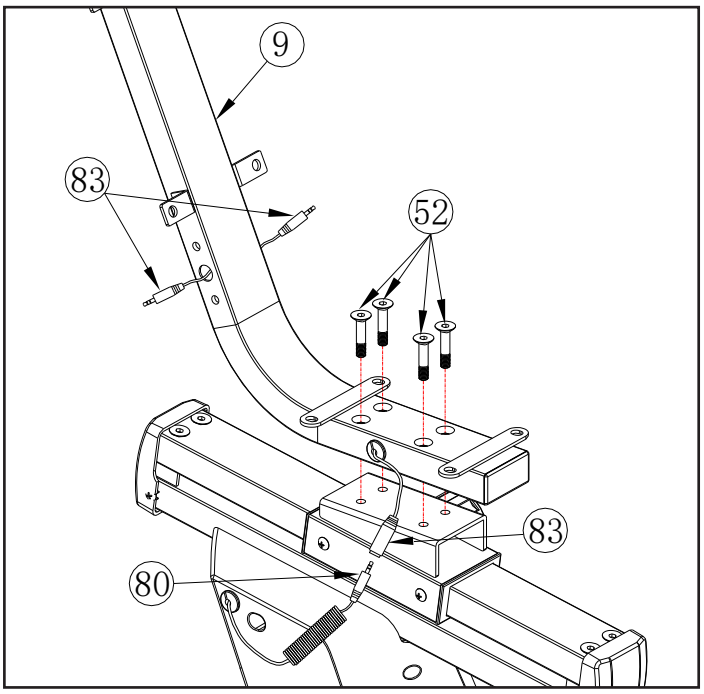

Hardware Step 7

#52. M8 x 40 Button Head Socket Screws (4 pcs)

1. Secure the **Seat Back Bracket (No. 9)** to the **Sliding Seat Plate** using 4 **Button Head Socket Screws (No. 52)**. Connect the two **Handpulse Wires (No. 83 & 80).**

8 Lower Seat Cushion

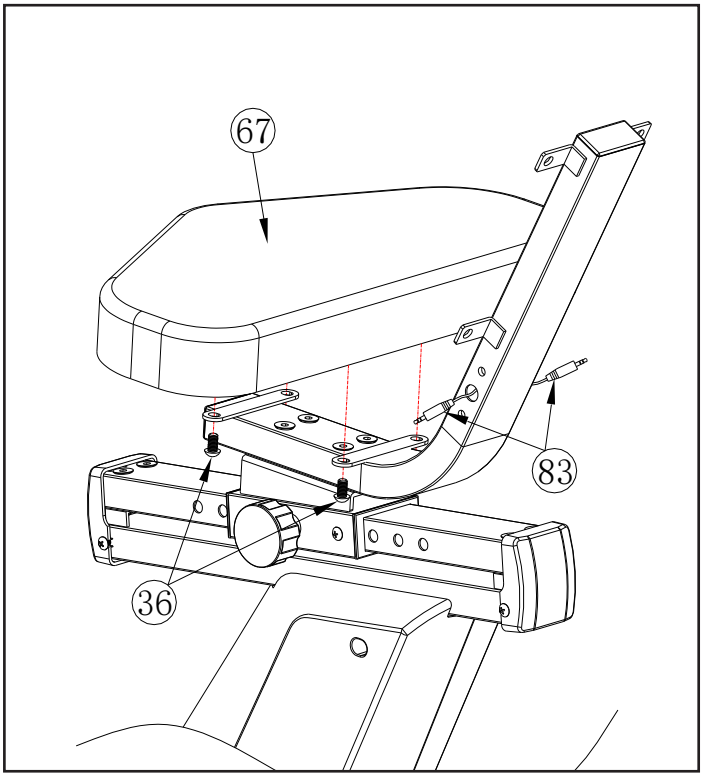

Hardware Step 8

#36. M8 x 15 Philips Head Screws (4 pcs)

1. Secure the **Seat Cushion (No. 67)** to the **Seat Back Bracket (No. 9)** using 4 **Philips Head Screws (No. 36).**

9 Seat Handlebars

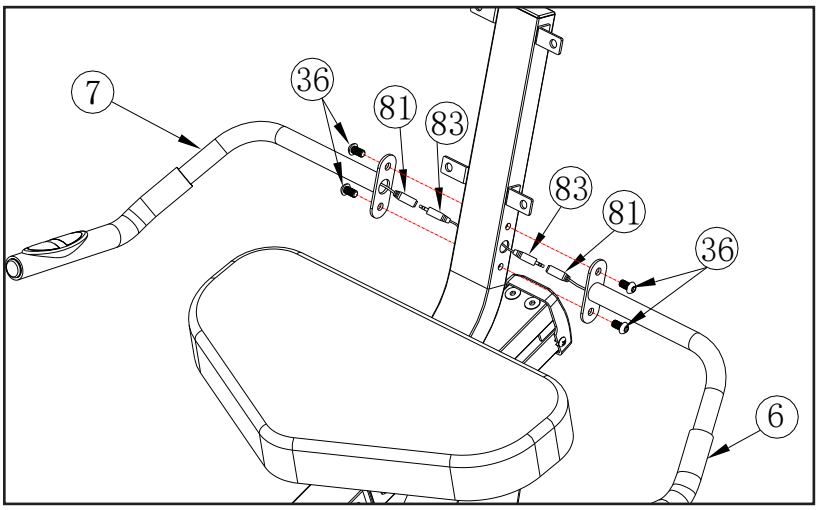

Hardware Step 9

#36. M8 x 15
Philips Head Screws (4 pcs)

1. Connect the **Handpulse Wires (No. 81 & 83)**
2. Secure the **Seat Handle Bar – L (No. 6)** and the **Seat Handle Bar – R (No. 7)** using 4 **Phillips Head Screws (No. 36)**.

10 Upper Seat Cushion

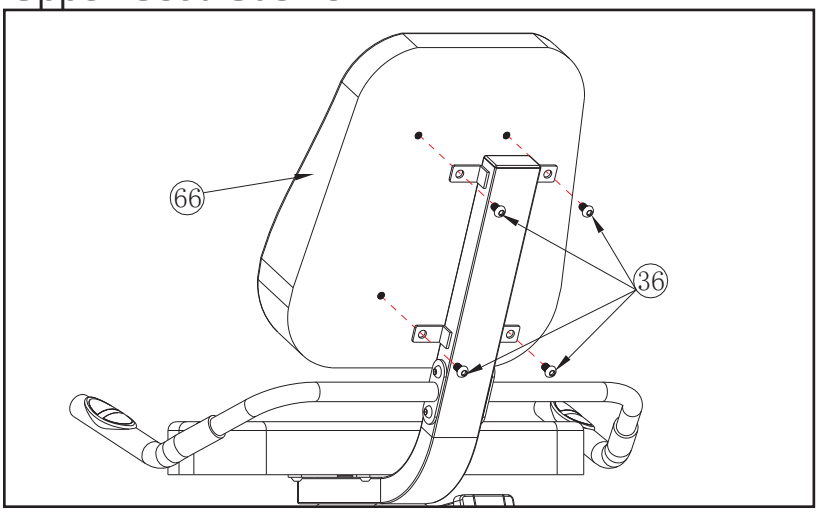

Hardware Step 10

#36. M8 x 15
Philips Head Screws (4 pcs)

1. Secure the **Seatback Cushion (No. 66)** to the **Seat Back Bracket (No. 9)** using 4 **Philips Head Screws (No. 36).**

11 Pedals

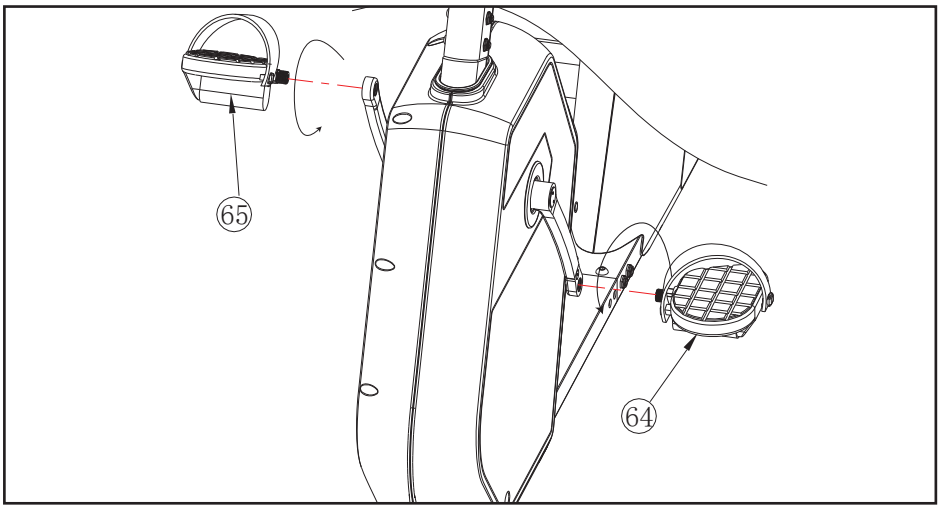

1. Secure the **Pedal - L (No. 64)** and **Pedal - R (No. 65)** using the **Philips Head Screwdriver & Wrench (No. 61).** The **Left Pedal (No. 64)** should be tightened counter-clockwise and the **Right Pedal (No. 65)** clockwise.
2. Secure all screws and adjust the 5 levelers to sit evenly on your floor.

Operation of Your Console



Function	Value	Default Value	Increase/ Decrease Step	Description
Time	0:00 ~ 99:00	00:00	± 1:00	1. When the window displays 0:00, the time will be accumulated upward. 2. When the window shows 5:00~99:00, the time will count down until 0 and the exercise will end.
Distance	0.00 ~ 99.99	0.00	± 0.50	1. When the window displays 0:00, the distance will be accumulated upward. 2. When the window shows 0.5~99.00, the distance will count down to 0 and then prompt, then count up.
Calories	0 ~ 9990	0.0	± 10	1. When the window shows 0, the calories will be added up. 2. When the window shows 10~9990, the calories will count down to 0 and then count up.
Watt	0 ~ 850	-	-	Measurement of power output related to current workout resistance and RPM.
Pulse	40 ~220	90	± 1	When using the hand pulse grips or a connected Bluetooth heart monitor, the pulse will show the current heart rate.

Console Interface

Standby Mode



Mode Selection

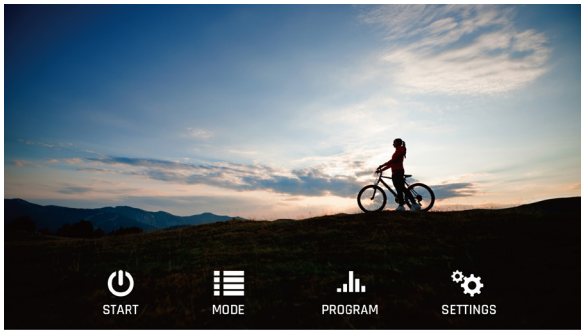

Target Mode Interface

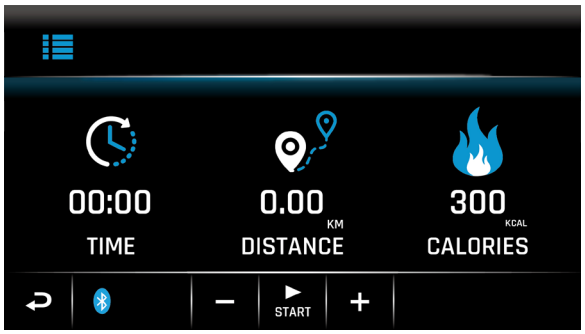

Program Mode Selection

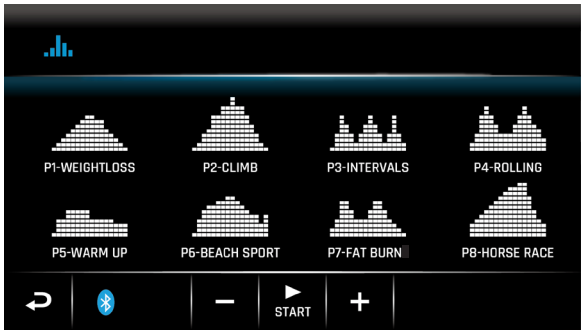

Exercise Interface



Console Interface

Setting Interface

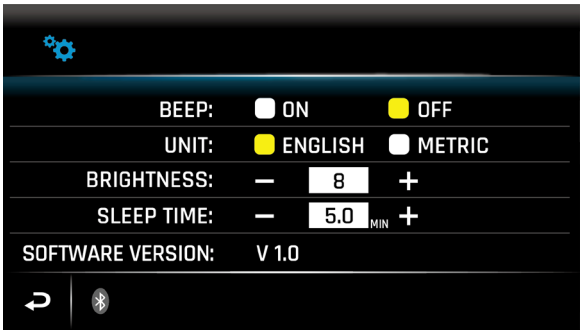

Motion Interface (Program Mode)

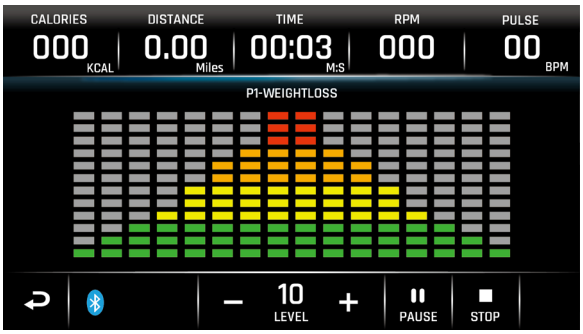

Data Review

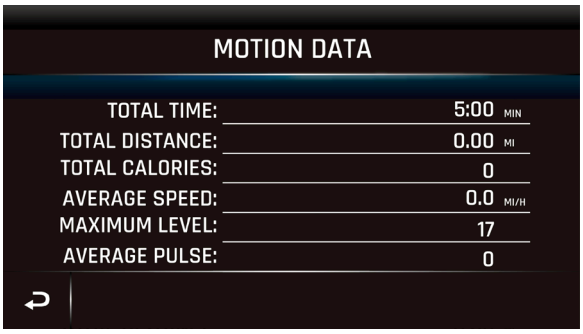

Console Buttons

MODE: Press this key to access the mode selection interface

PROGRAM: Press to access the program selection interface

START: Press to start workout

PAUSE: Press to pause workout

STOP: Press to end the workout and access the exercise data interface

SET: Press to set parameters

⮌: Return to the previous interface;

-: Decrease value; during exercise, press this key to reduce the resistance

+: Increase value; during exercise, press this key to increase the resistance

Basic Operation

1. After connecting to power, the console enters boot mode: the buzzer will beep once, and the boot screen will be displayed at the same time. The console will then enter the stand-by interface.
2. On the standby interface, tap the middle of the screen to access the start interface.
3. In the start interface, you may choose any of the following:
   - press “Start” to begin workout in Quick Start mode,
   - press “Mode” to access the mode selection interface (set target time distance calories),
   - press “Program” to access the “Program” interface, or
   - press “Set” to access the settings interface

In the settings interface, you can choose to turn the buzzer on/off (default is on), change the system to metric or imperial (default is imperial), adjust the screen brightness (default brightness is 8), and set the sleep time for the display (default 5 minutes).

After your workout begins, the value of each function starts to count (except for the heartbeat value, the meter will only display the value when it detects a heart-beat signal).

In the TARGET MODE interface, some function values need to be preset (the function values will vary depending on the selected sport mode). The preset function values are TIME (exercise time), DISTANCE (movement distance), and CALORIES (kcal).

Note: Some programs do not allow adjustment of preset function values.

To adjust speed/resistance, select the corresponding icon and set the target movement value by using the “+/--” keys. Press START to accept.

When the preset target value is reached, metrics for the completed workout (time, distance, calories burned, average speed, average resistance, average heart rate) are displayed.

Quick start mode

After powering on, the user can press START to begin working out in Quick Start mode. During exercise, you can press the +/- keys to adjust resistance (range 1 -24).

Program mode

From the home screen, press the PROGRAM key to view available programs. Touch the desired program to select. Once a program is selected, use the “+/-” keys to select the work-out time, and press the “Start” key to set. Press the “Start” button again to begin the workout program.

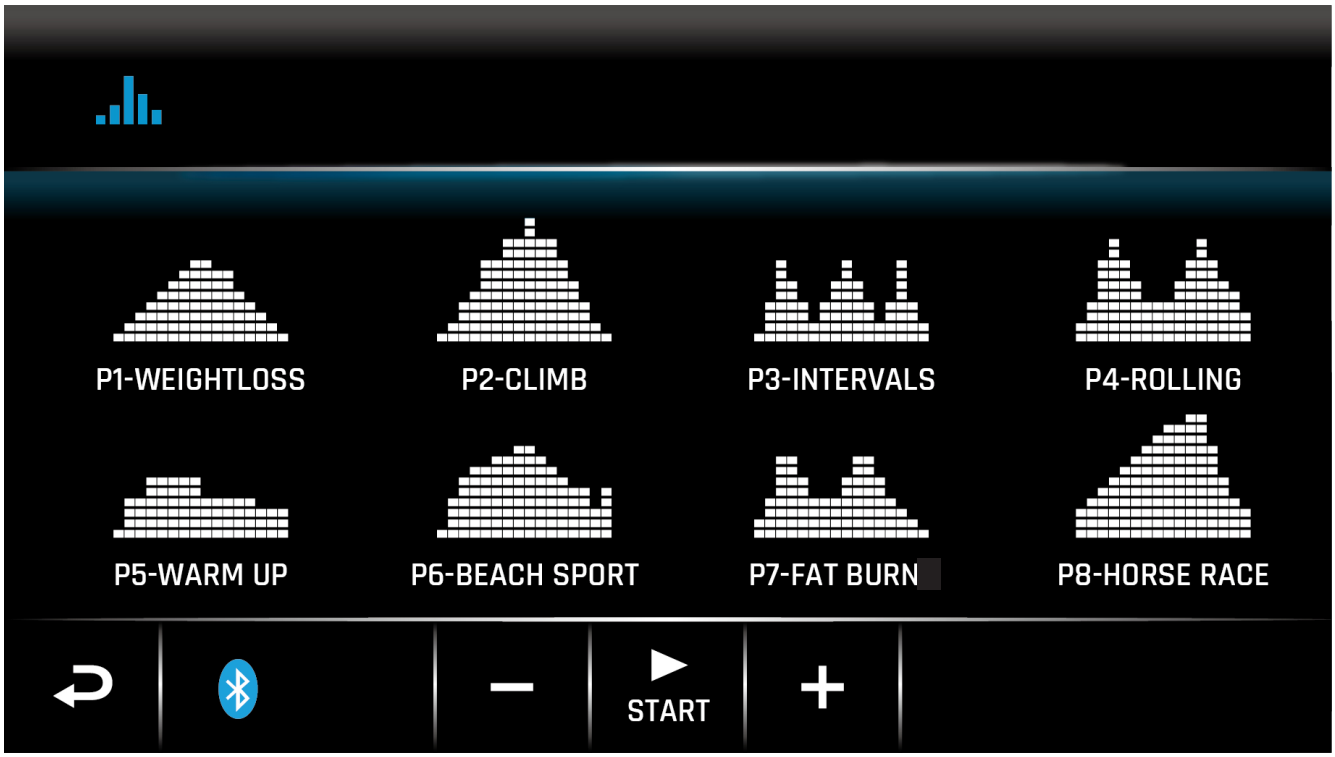

Programs

Weight Loss Program
Uses a gradual build from low to medium back to low resistance training, intended to burn calories for the purpose of weight loss.

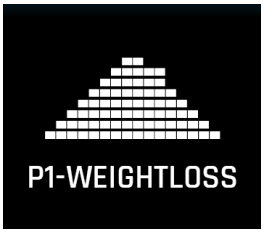

Climb
Simulates going up and down a hill. The workload will steadily increase and then decrease during the program.

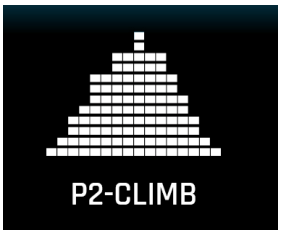

Interval
This program takes you through high levels of intensity followed by recovery periods of low intensity. This program utilizes and develops your fast twitch muscle fibers which are used when performing tasks that are intense and short in duration. These deplete your oxygen level and spike your heart rate, followed by periods of recovery and heart rate drop to replenish oxygen. Your cardiovascular system gets programmed to use oxygen more efficiently.

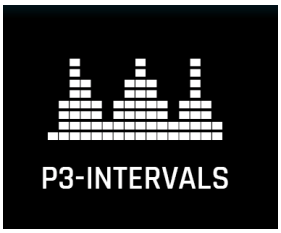

Rolling
Designed to increase your cardiovascular function and endurance that targets your heart and lungs. It will build up your heart muscle and increase blood flow and lung capacity. This is achieved by incorporating a higher level of exertion with slight fluctuations in work.



Warm Up
Intended to ready the body for a state of exercise so the body can achieve a higher level of work efficiency safely.

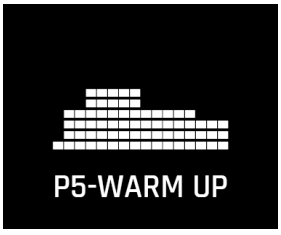

Beach Sport
Simulates beach exercises to improve joint flexibility and enhance cardiopulmonary activity.



Fat Burn
This program follows a quick progression up to the maximum resistance level (default or user input level) that is sustained for 2/3 of the workout. This program will challenge your ability to sustain your energy output for an extended period of time.



Horse Race
Designed to increase muscular strength in your lower body. This program will steadily increase in workload to a high level and forces you to sustain it. This is designed to strengthen and tone your legs and glutes (muscles of the butt).



Bluetooth Function

Your SB4500 Fitness Bike has BLUETOOTH 4.0 FTMS built-in and will work with any FTMS-enabled 3rd party applications. Bluetooth on your SB4500 is always on and ready to pair. Using your mobile device, simply open the 3rd party application of your choice and follow the instructions in the app on your phone to connect and begin use. Once a device is paired, the Bluetooth icon on the screen will light up in BLUE (as shown in the image below).



Bluetooth Heart Rate Monitor

Your SB4500 Fitness Bike has BLUETOOTH 4.0 FTMS built-in and will work with any Bluetooth-enabled heart rate monitors. Bluetooth on your SB4500 is always on and ready to pair. Pairing will differ based on the make and model of your specific heart rate monitor. Follow the instructions included with your Bluetooth heart rate monitor to ensure proper pairing and begin use. Once a heart rate monitor is paired, the SB4500 will display the data in the “Pulse” section of the screen.

Hand Pulse Grips

Your SB4500 Fitness Bike has built-in hand pulse grips located on the handles next to either side of the seat. To monitor your heart rate, simply grasp both hand pulse grips ensuring steady contact is made between your hands and the metal contact pads for at least 10 seconds. Once the machine has detected your pulse, the heart rate will be display in the "Pulse" section on your screen.

Note: There are significant individual differences in the heart rate of normal adults at rest, with an average of about 75 beats/min (between 60-100 beats/min). Factors like age, gender, and other physiological conditions will affect heart rate. The resting heart rate of newborn babies is fast, reaching more than 130 beats per minute. Among adults, the heart rate of women is generally slightly faster than that of men. Heart rate will slow down during quiet or sleep and speed up during exercise or emotional excitement. Under the influence of certain drugs or neurohumoral factors, the heart rate will increase or decrease. People who do physical labor or physical exercise daily often have a slower heart rate.

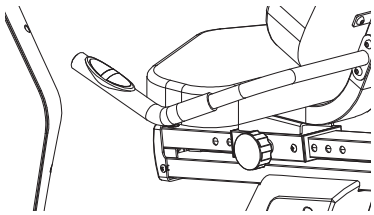

Wearing A Chest Strap

(Sold Separately)

1. Attach the transmitter to the elastic strap using the interlocking button.
2. Adjust the strap as tightly as possible as long as the strap is not too tight to remain comfortable.
3. Position the transmitter with the logo centered in the middle of your torso facing away from your chest (some people must position the transmitter slightly left of center). Attach the final end of the elastic strap by inserting the round end and, using the locking parts, secure the transmitter and strap around your chest.
4. Position the transmitter directly below the pectoral muscles.
5. Sweat is the best conductor to measure very minute heart beat electrical signals. However, plain water can also be used to pre-wet the electrodes (2 ribbed oval areas on the reverse side of the belt and both sides of the transmitter). It's also recommended that you wear the transmitter strap a few minutes before your work out. Some users, because of body chemistry, have a more difficult time in achieving a strong, steady signal at the beginning. After "warming up", this problem lessens.
6. Your workout must be within range - distance between transmitter/receiver – to achieve a strong steady signal. The length of range may vary somewhat but generally stay close enough to the console to maintain good, strong, reliable readings. Wearing the transmitter directly on bare skin assures you of proper operation. If you wish, you may wear the transmitter over a shirt. To do so, wet the areas of the shirt that the electrodes will rest upon.

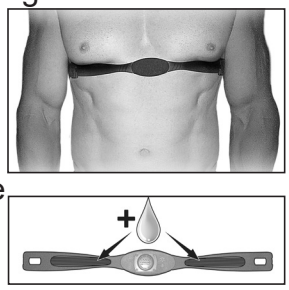

Note: The transmitter is automatically activated when it detects activity from the user's heart. Additionally, it automatically deactivates when it does not receive any activity. Although the transmitter is water resistant, moisture can have the effect of creating false signals, so you should take precautions to completely dry the transmitter.

Heart Rate

The old motto, “no pain, no gain”, is a myth that has been overpowered by the benefits of exercising comfortably. A great deal of this success has been promoted by the use of heart rate monitors. With the proper use of a heart rate monitor, many people find that their usual choice of exercise intensity was either too high or too low and exercise is much more enjoyable by maintaining their heart rate in the desired benefit range.

To determine the benefit range in which you wish to train, you must first determine your predicted Maximum Heart Rate. This can be accomplished by using the following formula: 220 minus your age. This will give you the predicted Maximum Heart Rate (MHR) for someone of your age. To determine the effective heart rate range for specific goals you simply calculate a percentage of your MHR. Your heart rate training zone is 50% to 90% of your maximum heart rate. 60% of your MHR is the zone that burns fat, while 80% is for strengthening the cardio vascular system. This 60% to 80% is the zone to stay in for maximum benefit.

For someone who is 40 years old their predicted target heart rate zone is calculated:

220 – 40 = 180 (maximum heart rate)
180 x .6 = 108 beats per minute
(60% of maximum)
180 X .8 = 144 beats per minute
(80% of maximum)

So for a 40 year old the training zone would be 108 to 144 beats per minute.

After calculating your MHR you can decide upon which goal you would like to pursue.

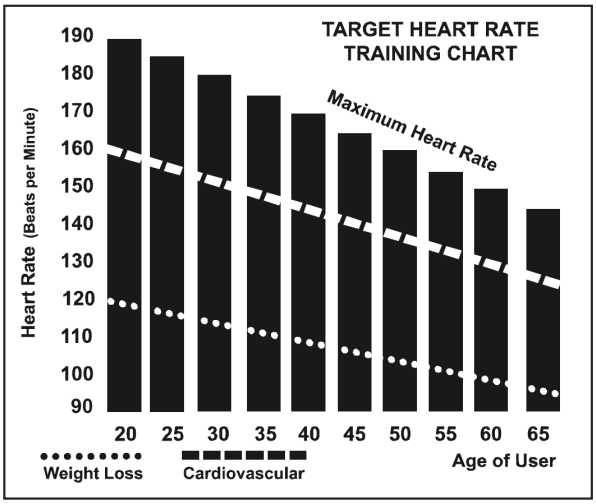

The two most popular reasons for, or goals, of exercise are cardiovascular fitness (training for the heart and lungs) and weight control. The black columns on the chart above represent the MHR for a person whose age is listed at the bottom of each column. The training heart rate, for either cardiovascular fitness or weight loss, is represented by two different lines that cut diagonally through the chart. A definition of the lines’ goal is in the bottom left-hand corner of the chart. If your goal is cardiovascular fitness or if it is weight loss, it can be achieved by training at 80% or 60%, respectively, of your MHR on a schedule approved by your physician. Consult your physician before participating in any exercise program.

Rate of Perceived Exertion

Heart rate is important but listening to your body also has a lot of advantages. There are more variables involved in how hard you should workout than just heart rate. Your stress level, physical health, emotional health, temperature, humidity, the time of day, the last time you ate and what you ate all contribute to the intensity at which you should workout. If you listen to your body it will tell you all of these things.

The rate of perceived exertion (RPE), also known as the Borg scale, was developed by Swedish physiologist G.A.V. Borg. This scale rates exercise intensity from 6 to 20 depending upon how you feel or the perception of your effort.

The scale is as follows:

Rating Perception of Effort

6 Minimal
7 Very,very light
8 Very,very light +
9 Very light
10 Very light +
11 Fairly light
12 Comfortable
13 Somewhat hard
14 Somewhat hard +
15 Hard
16 Hard +
17 Very hard
18 Very hard +
19 Very,very hard
20 Maximal

You can get an approximate heart rate level for each rating by simply adding a zero to each rating. For example a rating of 12 will result in an approximate heart rate of 120 beats per minute. Your RPE will vary depending on the factors discussed earlier. If your body is strong and rested, you will feel strong and your pace will feel comfortable. When your body is in this condition, you are able to train harder and the RPE will support this. If you are feeling tired and sluggish, it is because your body needs a break. In this condition, your pace will feel difficult. Again, this will show up in your RPE and you will train at the proper level for that day.

General Maintenance

1. Wipe down all areas in the sweat path with a damp cloth after each workout.
2. If a thump, clicking or wobbly feeling develops, the main cause is usually the pedals and/ or crank arms being loose.

Erratic Operation

Caution! Do not use this product for heart rate programs unless a steady, solid actual heart rate value is being displayed. High, wild, random numbers being displayed indicate a problem.

Areas to look for interference which may cause erratic heart rate:

1. Microwave ovens, TV's, small appliances, etc.
2. Fluorescent lights.
3. Some household security systems.
4. Perimeter fence for a pet.
5. Some people have problems with the transmitter picking up a signal from their skin. If you have problems try wearing the transmitter upside down. Normally the transmitter will be oriented so the XTERRA Fitness logo is right side up.
6. The receiver that picks up your heart rate is very sensitive. If there is an outside noise source, turning the whole machine 90 degrees may de-tune the interference.
7. Another Individual wearing a transmitter within 3' of your machine's console.

If you continue to experience problems contact our service department.

Manufacturer's Limited Warranty

Effective August 10, 2021 - FITNESS BIKE LIMITED WARRANTY

XTERRA Fitness Inc. warrants all its home use fitness bike parts for a period of time listed below, from the date of retail sale, as determined by a sales receipt or in the absence of a sales receipt, eighteen (18) months from the original factory shipping date. XTERRA Fitness' responsibilities include providing new or remanufactured parts, at XTERRA Fitness' option, and technical support to our independent dealers and servicing organizations. In the absence of a dealer or service organization, these warranties will be administered by XTERRA Fitness directly to a consumer. The warranty period applies to the following components:

Home Use Limited Warranty		
Frame & Brake	Parts	In-Home Labor
Lifetime	3 Years	1 Year

NORMAL RESPONSIBILITIES OF THE CONSUMER

This warranty applies only to products in ordinary household use. The consumer is responsible for the items listed below:

1. The warranty registration card must be completed and returned to the address listed on the card within 10 days of the original purchase to validate the manufacturer's limited warranty or register online at the XTERRA Fitness website.
2. Proper use of the fitness bike in accordance with the instructions provided in this manual, including maintenance.
3. Proper connection to a power supply of sufficient voltage, replacement of blown fuses, repair of loose connections or defects in house/facility wiring.
4. Expenses for making the fitness bike accessible for servicing, including any item that was not part of the fitness bike at the time it was shipped from the factory.
5. Damages to the fitness bike finish during shipping, installation or following installation.

EXCLUSIONS

This warranty does not cover the following:

1. CONSEQUENTIAL, COLLATERAL, OR INCIDENTAL DAMAGES SUCH AS PROPERTY DAMAGE AND INCIDENTAL EXPENSES RESULTING FROM ANY BREACH OF THIS WRITTEN OR ANY IMPLIED WARRANTY. Note: Some states do not allow the exclusion or limitation of incidental or consequential damages, so this limitation or exclusion may not apply to you.
2. Service call reimbursement to the consumer. Service call reimbursement to the dealer that does not involve malfunction or defects in workmanship or material, for units that are beyond the warranty period, for units that are beyond the service call reimbursement period, for fitness bikes not requiring component replacement, or fitness bikes not in ordinary household use.
3. Damages caused by services performed by persons other than authorized XTERRA Fitness service companies, use of parts other than original XTERRA Fitness parts, or external causes such as alterations, modifications, abuse, misuse, accident, improper maintenance, inadequate power supply, or acts of God.
4. Products with original serial numbers that have been removed or altered.
5. Products that have been; sold, transferred, bartered, or given to a third party.
6. Products that are used as store display models.
7. Products that do not have a warranty registration on file at XTERRA Fitness Inc. XTERRA Fitness reserves the right to request proof of purchase if no warranty record exists for the product.
8. Product use in any environment other than a residential setting.
9. THIS WARRANTY IS EXPRESSLY IN LIEU OF ALL OTHER WARRANTIES EXPRESSED OR IMPLIED, INCLUDING THE WARRANTIES OF MERCHANTABILITY AND/OR FITNESS FOR A PARTICULAR PURPOSE.

SERVICE

Keep your bill of sale. Twelve (12) months from the date on the bill of sale or eighteen (18) months from the date of factory shipping as determined by the serial number establishes the warranty period should service be required. If service is performed, it is in your best interest to obtain and keep all receipts. This written warranty gives you specific legal rights. You may also have other rights that vary from state to state. Service under this warranty must be obtained by following these steps, in order:

1. Contact your selling authorized XTERRA Fitness dealer. OR
2. Contact your local authorized XTERRA Fitness service organization.
3. If there is a question as to where to obtain service, contact our service department at (870)336-4286.
4. XTERRA Fitness' obligation under this warranty is limited to repairing or replacing, at XTERRA Fitness' option, the product through one of our authorized service centers. All repairs must be preauthorized by XTERRA Fitness. If the product is shipped to a service center freight charges to and from the service center will be the customer's responsibility. For replacement parts shipped while the product is under warranty, the customer will be responsible for shipping and handling charges. For in-home service, the customer will be responsible for a trip charge. There will be an additional trip charge if the customer is located over 100 miles from the nearest service center.
5. The owner is responsible for adequate packaging upon return to XTERRA Fitness. XTERRA Fitness is not responsible for damages in shipping. Make all freight damage claims with the appropriate freight carrier. DO NOT SHIP ANY UNIT TO OUR FACTORY WITHOUT A RETURN AUTHORIZATION NUMBER. All units arriving without a return authorization number will be refused.
6. For any further information, or to contact our service department by mail, send your correspondence to:

   XTERRA Fitness, Inc.
   P.O. Box 2037
   Jonesboro, AR 72402-2037

Product features or specifications as described or illustrated are subject to change without notice. All warranties are made by XTERRA Fitness, Inc. This warranty applies only in the 48 contiguous United States. NOTE: This does not apply to Alaska or Hawaii.

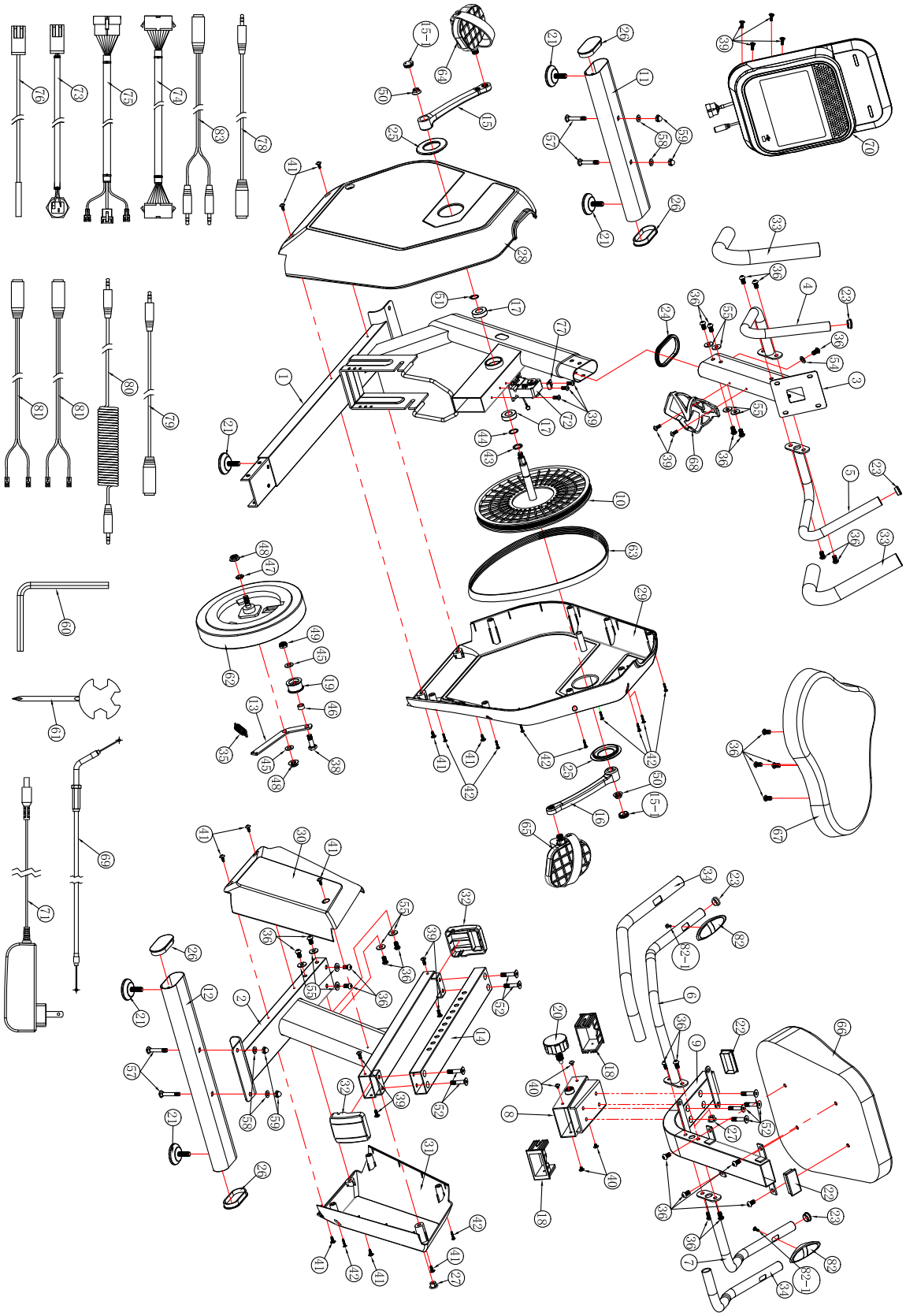

SB4500 Parts List		
Item	Description	Usage
1	Front Main Frame	1
2	Rear Main Frame	1
3	Console Mast	1
4	Mast Handle Bar - L	1
5	Mast Handle Bar - R	1
6	Seat Handle Bar - L	1
7	Seat Handle Bar - R	1
8	Aluminum Track	1
9	Seat Back Bracket	1
10	Drive Pully	1
11	Front Stabilizer	1
12	Rear Stabilizer	1
13	Idler Wheel Assembly	1
14	Seat Carriage Assembly	1
15	Crank Arm - L	1
15-1	Crank Arm End Cap	2
16	Crank Arm - R	1
17	Bearing Ø35*17*10mml	2
18	Aluminum Track End Cap	2
19	Bearing	1
20	Pull Pin	1
21	Rubber Stop	5
22	Seat Back Bracket End Cap	2
23	Button Head Plug	4
24	O-ring 40*80mm	1
25	Round Disk Cover, Crank	2
26	Stabilizer End Cap	4
27	Block	2
28	Front Shroud - L	1
29	Front Shroud - R	1
30	Rear Shroud - L	1
31	Rear Shroud - R	1
32	Aluminum Axle End Cap	2
33	Handgrip Foam	2
34	Seat Handle Bar Foam	2
35	Spring	1
36	Phillips Head Screw M6 x 15mm	27
38	Hexagonal Screw M10*30mml	1
39	Phillips Head Screw M5*15mm	13
40	Bolt 5*8mm	4
41	Bolt 5*15mm	10
42	Bolt 3.5*20mm	11
43	Washer Ø17.2*22*2t	1
44	Washer Ø17.2*22*1t	2
45	Washer Ø10*20*1.5t	2
46	Block Ø10*15*8t	1
47	Nut 3/8"*3t	1
48	Nut 3/8"*7t	2
49	Nut M10*9mm	1

50	Nut M10*1.25	2
51	Circlip Ø15.4*1t	1
52	Button Head Socket Screw M8*40mml	8
54	Cup Washer M8	1
55	Flat Washer Ø8*21*2t	10
57	Carriage Bolt M8*50mml	4
58	Flat Washer Ø8*16*1.5t	4
59	Cap Nut M8	4
60	L Allen Wrench 6mm	1
61	Philips Head Screwdriver & Wrench 13 14 15	1
62	Flywheel	1
63	Drive Belt	1
64	Pedal - L	1
65	Pedal - R	1
66	Seatback Cushion	1
67	Seat Cushion	1
68	Drink Bottle Holder	1
69	Motor Cable 400mml	1
70	Console 7" TFT	1
71	Power Cord	1
72	Motor	1
73	DC Power Cord 500mml	1
74	Computer Cable 450mml	1
75	Computer Cable 650mml	1
76	Sensor with Cable 300mml	1
77	Sensor Housing 22*15*9.58mm	1
78	Handpulse Wire 450mm	2
79	Handpulse Wire 1500mm	1
80	Handpulse Wire 1000mm	1
81	Handpulse Wire 600mm	2
82	Handle Bar Sensor	2
82-1	Philips Head Screw ST4*15mml	2
83	Handpulse Wire-double Head	1

3000 Nestle Road Jonesboro, AR 72401 - Phone:870-336-4286 - Fax:870-935-7611

©2021 All RIghts Reserved.