XTERRA FITNESS

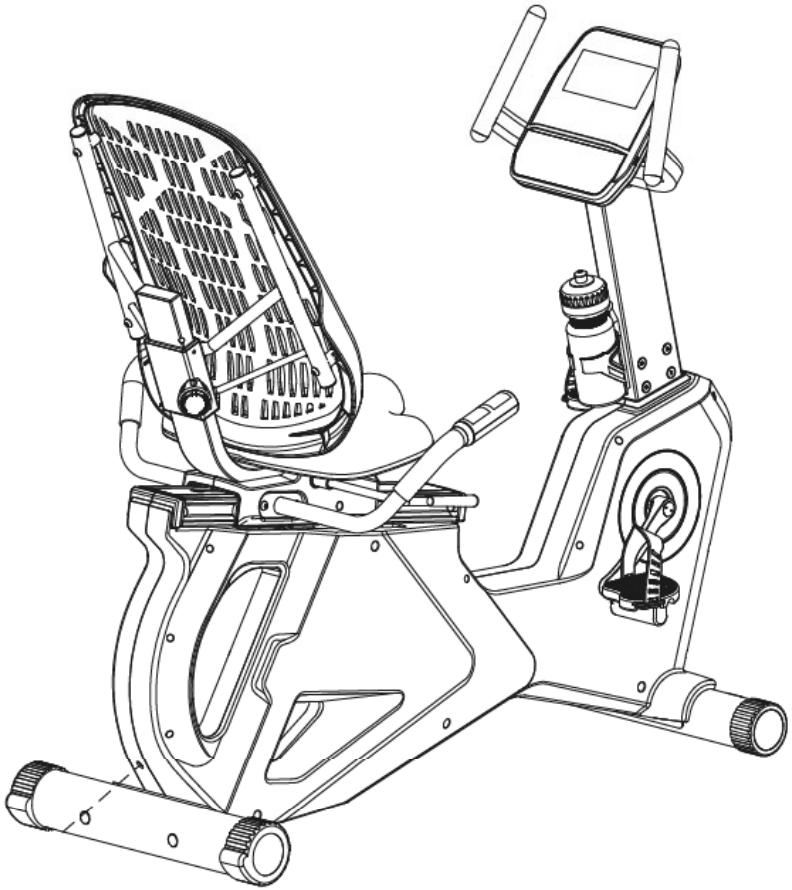

SB600 RECUMBENT BIKE

SB600_160113_OM_20261111

Online Support

If you require assistance or are experiencing issues with your XTERRA Machine, please contact customer care for additional help.

1-800-258-8511

questions@xterrafitness.com

Warranty Registration

Scan to quickly and easily register your new XTERRA Fitness machine.

Table of Contents

Product Registration 3
Warning / Safety Instructions
Product Label 4
Warning, Compliances, and Notices 5
Safety Instructions 6
Electrical Safety 7
Parts and Assembly
Parts Included 8
Assembly 10
Adjusting Your Machine 16
Technology and Features
About Your Machine 19
Using the XF Connect App 20
Console Screen - Overview 22
Function Buttons 23
Programs
Powering On 24
Programs 26
Heart Rate Chest Strap 33
Heart Rate Chest Strap Warnings 34
Heart Rate Exertion 35
Recovery 37
Maintenance & Care 38
Exploded View Diagram 39
Warranty 40

PRODUCT REGISTRATION

Congratulations on your new Recumbent Bike, and welcome to the XTERRA Fitness family!

Thank you for your purchase of this quality unit from XTERRA Fitness. Your new unit was manufactured by one of the leading fitness manufacturers in the world and is backed by one of the most comprehensive warranties available. XTERRA Fitness will do all we can to make your ownership experience as pleasant as possible for many years to come.

If you have questions, or if parts are missing or damaged, or you require customer service, call (870) 336-4286. Please have your model number and serial number handy when you call.

Please take a moment at this time to record the name of the dealer, their telephone number, and the date of purchase below to make any future, needed contact easy. We appreciate your support and we will always remember that you are the reason that we are in business.

Serial Number	
Date of Purchase	
Dealer / Place of Purchase	

WARRANTY REGISTRATION

Use your smartphone to scan the QR code above to quickly and easily register your new XTERRA Fitness machine.

You can also go to **xterrafitness.com/warranty** under the Support tab to register online.

Version: 6.0
Revision: 11/11/2026

PRODUCT LABELS

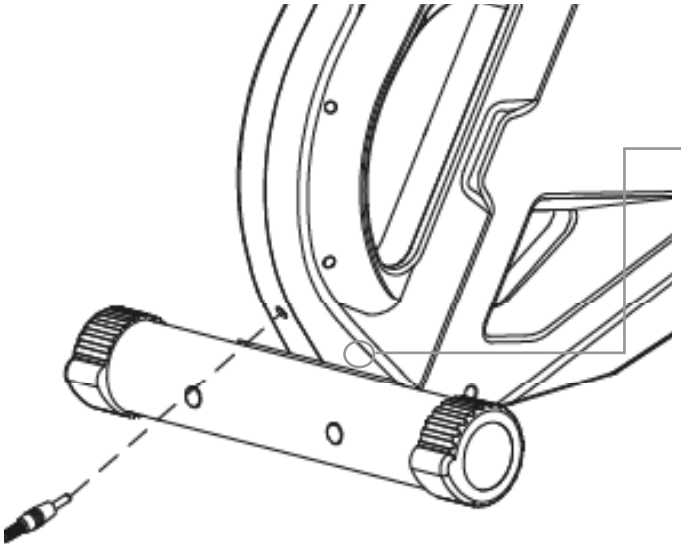



SERIAL NUMBER STICKER

This sticker will be found on the rear of the stabilizer, near the adaptor port. Please record the number below the barcode for the purpose of registering your treadmill's warranty.



PROPOSITION 65 WARNING

This sticker will be found on the rear of the motor cover. The State of California requires us to inform you that this unit was manufactured using chemicals that could cause harm with improper use.

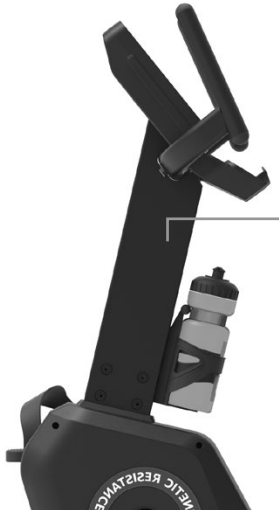

SAFETY WARNING STICKER

This sticker will be found on the left side of the unit's upright. The same warning can be found in this manual. Please read and be aware of the precautions before operating your unit.

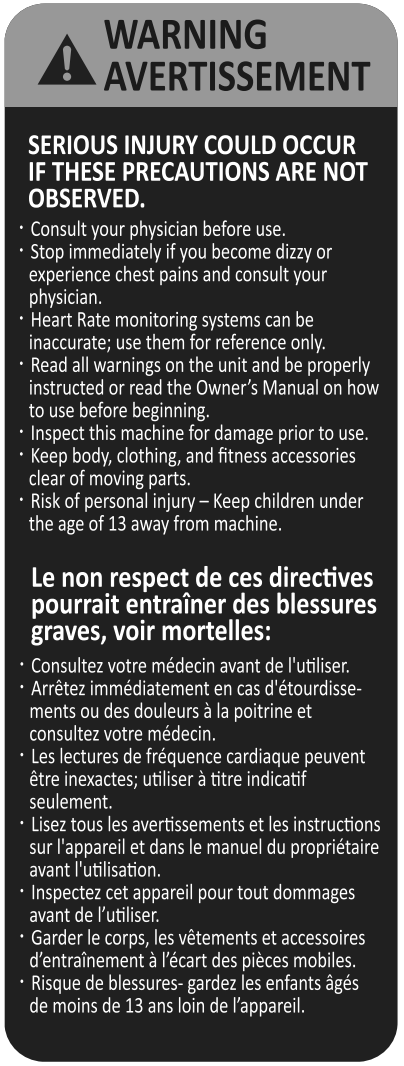

WARNINGS, COMPLIANCE AND NOTICES

This product has been certified to meet the following standards:

- FCC part 15
- UL
- Bluetooth (with FTMS)

This device complies with part 15 of the FCC Rules. Operation is subject to the following two conditions: (1) this device must not cause harmful interference, and (2) this device must not accept any interference received, including interference that may cause undesired operation.

NOTE: This equipment has been tested and found to comply with the limits for a Class B digital device, pursuant to Part 15 of the FCC Rules. These limits are designed to provide reasonable protection against harmful interference in a residential installation. This equipment generates, uses and can radiate radio frequency energy and, if not installed and used in accordance with the instructions, may cause harmful interference to radio communications. However, there is no guarantee that interference will not occur in a particular installation. If this equipment does cause harmful interference to radio or television reception, which can be determined by turning the equipment off and on, the user is encouraged to try to correct the interference by one or more of the following measures:

1. Reorient or relocate the receiving antenna.
2. Increase the separation between the equipment and receiver.
3. Connect the equipment to an outlet on a circuit different from that to which the receiver is connected.
4. Consult the dealer or an experienced radio/TV technician for help.

CAUTION:

- To comply with FCC RF exposure compliance requirements, a separation distance of at least 20 cm must be maintained between the antenna of this device and all persons.
- This transmitter must not be co-located or operating in conjunction with any other antenna or transmitter

SAFETY INSTRUCTIONS

When using an electrical appliance, basic precautions should always be followed, including the following:
Read all instructions before using this appliance.

DANGER - To reduce the risk of electric shock:
Always unplug this appliance from the electrical outlet immediately after using and before cleaning.

WARNING - To reduce the risk of burns, fire electric shock, or injury to persons:

1. An appliance should never be left unattended when plugged in. Unplug from outlet when not in use, and before putting on or taking off parts.
2. Do not operate under blanket or pillow. Excessive heating can occur and cause fire, electric shock, or injury to persons.
3. This exercise equipment is not intended for use by persons with reduced physical, sensory or mental capabilities, or lack of experience and knowledge.
4. Use this appliance only for its intended use as described in this manual. Do not use attachments not recommended by the manufacturer.
5. Never operate this appliance if it has a damaged cord or plug, if it is not working properly, if it has been dropped or damaged, or dropped into water. Return the appliance to a service center for examination and repair.
6. Do not carry this appliance by supply cord or use cord as a handle.
7. Keep the cord away from heated surfaces.
8. Never operate the appliance with the air openings blocked. Keep the air openings free of lint, hair, and the like.
9. Never drop or insert any object into any opening.
10. Do not use outdoors.
11. Do not operate where aerosol (spray) products are being use or where oxygen is being administered.
12. Connect this appliance to a properly grounded outlet only. See Grounding Instructions.
13. The appliance is intended for household use.
14. To disconnect, turn all controls to the off position, then remove the plug from the outlet.
15. Do not operate equipment on deeply padded, plush or shag carpet. Damage to both carpet and equipment may result.
16. Before beginning this or any exercise program, consult a physician. This is especially important for persons over the age of 35 or persons with pre-existing health conditions.
17. Keep hands away from all moving parts.
18. The pulse sensors are not medical devices. Various factors, including the user's movement, may affect the accuracy of heart rate readings. The pulse sensors are intended only as exercise aids in determining heart rate trends in general.
19. Do not attempt to use your equipment for any purpose other than for the purpose it is intended.
20. Wear proper shoes. High heels, dress shoes, sandals or bare feet are not suitable for use on your equipment. Quality athletic shoes are recommended to avoid leg fatigue.
21. **User Weight Limit: 300 lbs.**

Please ensure that you review and adhere to the user weight restrictions and power requirements of your new machine. Failure to do so may result in serious injury or damage to your machine.

ELECTRICAL SAFETY

WARNING!

Route the power cord away from any moving part of the unit including the elevation mechanism and transport wheels.

NEVER remove any cover without first disconnecting AC power. If voltage varies by ten percent (10%) or more, the performance of your unit may be affected. **Such conditions are not covered under your warranty.** If you suspect the voltage is low, contact your local power company or a licensed electrician for proper testing.

NEVER expose this unit to rain or moisture. This product is **NOT** designed for use outdoors, near a pool or spa, or in any other high humidity environment. The temperature specification is 40 degrees C, and humidity is 95%, non-condensing (no water drops forming on surfaces).

Circuit breakers: Avoid AFCI/GFCI circuit breakers if possible. These breakers may trip occasionally during exercise because of the high inrush currents of the unit drive electronics and motor. This is an issue that affects all unit brands. New laws in your area may require these breakers. If you do have these breakers and outlets in your home, and are experiencing nuisance tripping, you should check if there are any other devices plugged into the same circuit. Some examples of devices that may also cause tripping are fluorescent lights with electronic ballasts, coffee maker, space heater, hair drier.

Optimally the unit should be the only device plugged into the circuit. Our units have surge suppressors built in to help avoid nuisance tripping. We have tested several AFCI/GFCI breakers and outlets with our products. Brands we have tested are: Eaton (Cutler Hammer Series), Leviton (Smart lock pro) and Schneider Electric (Canadian home series). These breakers do not trip in our testing, when connected to our units, as long as no other devices are plugged into the same circuit.

- **NEVER** operate this unit without reading and completely understanding the results of any operational change you request from the computer.
- Understand that changes in resistance do not occur immediately. Set your desired work level on the computer console and release the adjustment key. The computer will obey the command gradually.
- **NEVER** use your unit during an electrical storm. Surges may occur in your household power supply that could damage unit components. Unplug the unit during an electrical storm as a precaution.
- Use caution while participating in other activities while walking on your unit; such as watching television, reading, etc. These distractions may cause you to lose balance which may result in serious injury.
- Do not use excessive pressure on console control keys. They are precision set to function properly with little finger pressure.

PARTS INCLUDED

TOOLS INCLUDED:

- ❑ 6mm Allen Wrench
- ❑ 5mm Allen Wrench
- ❑ 13/15mm Wrench

PARTS INCLUDED:

- ❑ 1 Main Frame
- ❑ Front Stabilizer
- ❑ Rear Stabilizer
- ❑ Central Support Tube
- ❑ Stop Bar
- ❑ Console
- ❑ Saddle
- ❑ Back Rest
- ❑ Front Handlebars
- ❑ 2 Side Handlebars
- ❑ 2 Pedals
- ❑ Bottle Holder
- ❑ Water Bottle
- ❑ Back Pad
- ❑ Back Pad Support Tube
- ❑ Hardware Bag
- ❑ Adapter

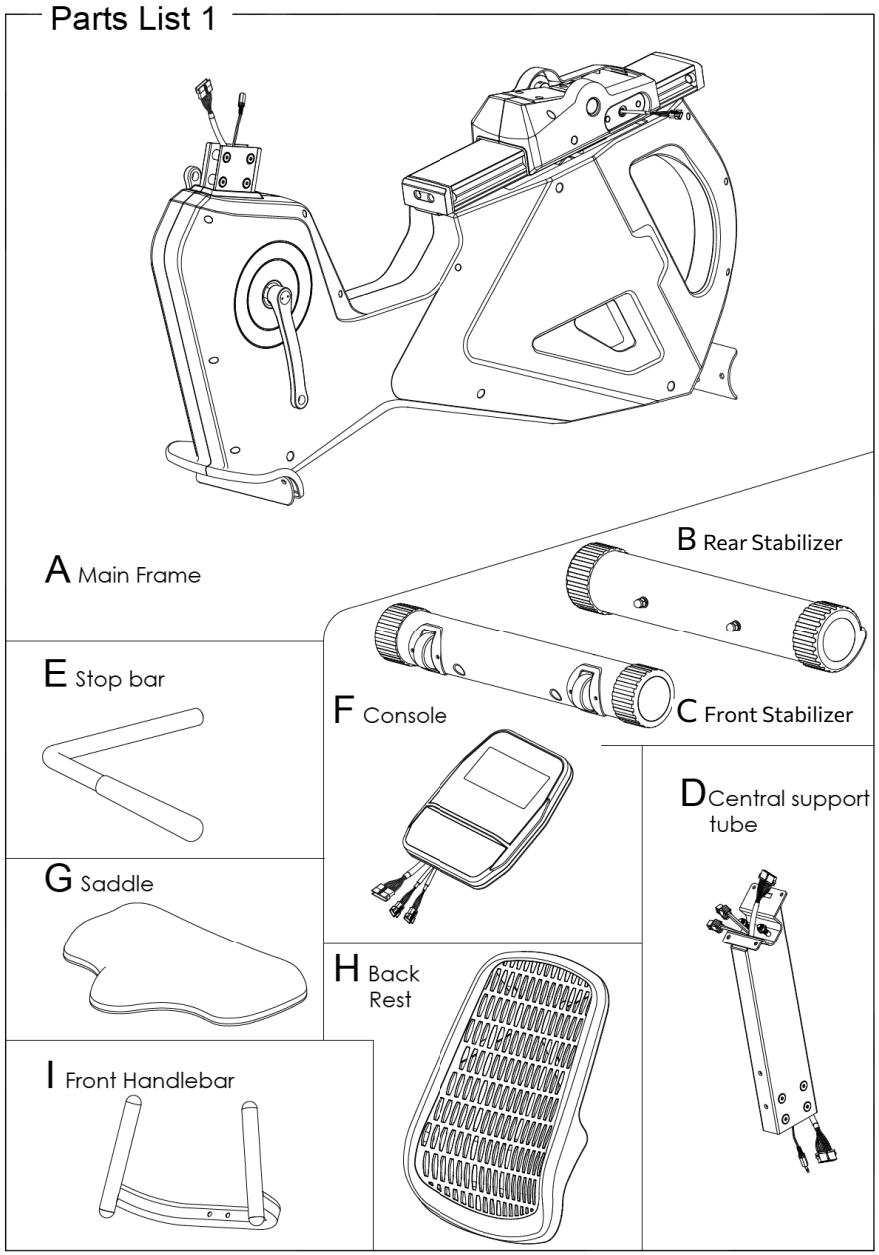

PARTS INCLUDED

Parts List 2

P
Back Pad
Suppoet Tube

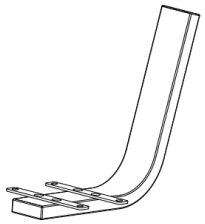

J
Side Handle bar

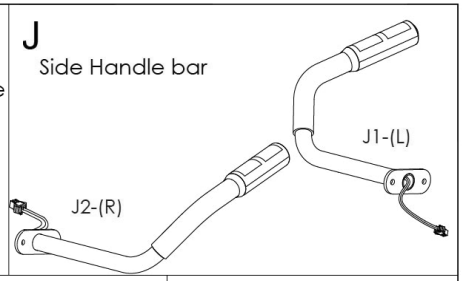

M Bottle holder



(M2)
Wather Bottle



(M1)
Bottle holder

O Back pad

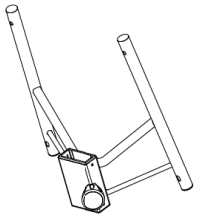

L Pedal

(L1)Strap(R)



(L2)Strap(L)



N Screw Bag

(N2) SPRING WASHER M8



(N3) WASHER M8



(N5) SCREW M8X90



(N7) SCREW M8X35



(N8) SCREW M8X20

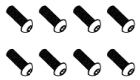

(N10) SCREW M6X16



(N13) SCREW M8X40



(N14) WASHER M8



S Adaptor

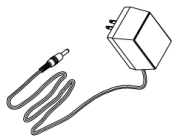

Tools

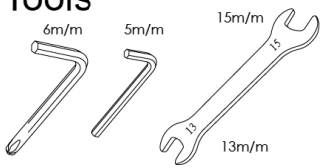

ASSEMBLY

1. Secure the **Rear Stabilizer (B)** to the **Main Frame (A)** using two **Screws (N1), 2 Spring Washers (N2), and 2 Washers (N3), Nut (N4)** using the **Wrench**. Note: If the machine is not sitting evenly, turn the adjustable end-cap to the desired level in order to balance the frame.



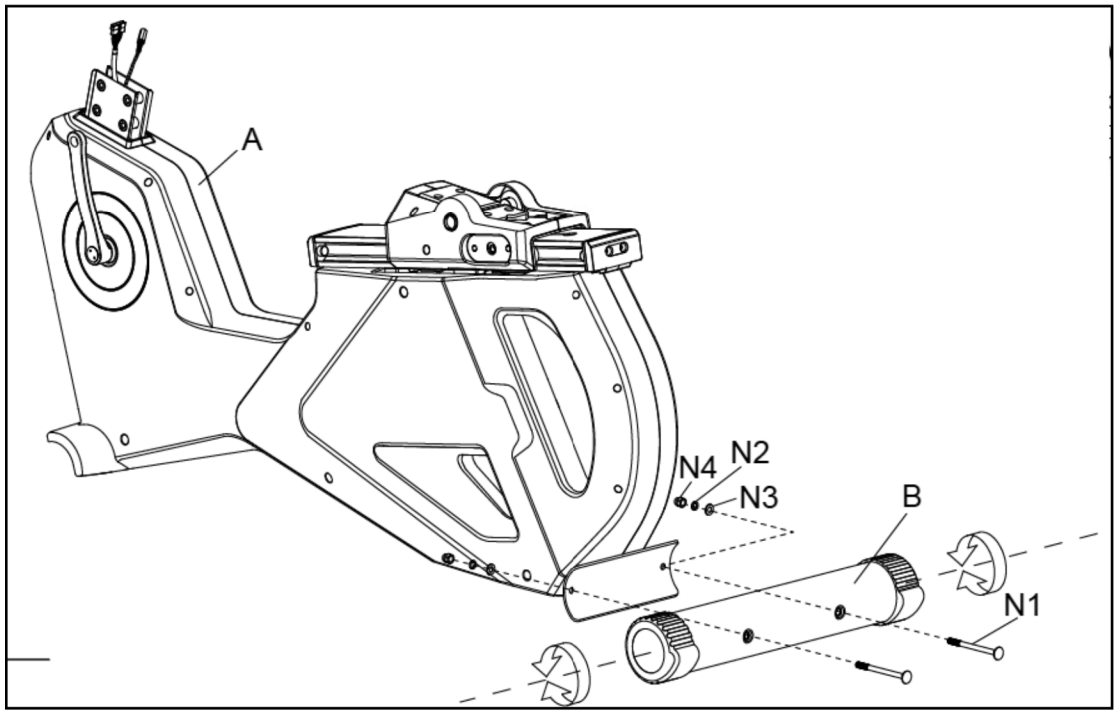

2. Secure the **Front Stabilizer (C)** to the **Main Frame (A)** using 2 **Screws (N5), 2 Spring Washers (N2), and 2 Washers (N3)** using the **6mm Wrench**.



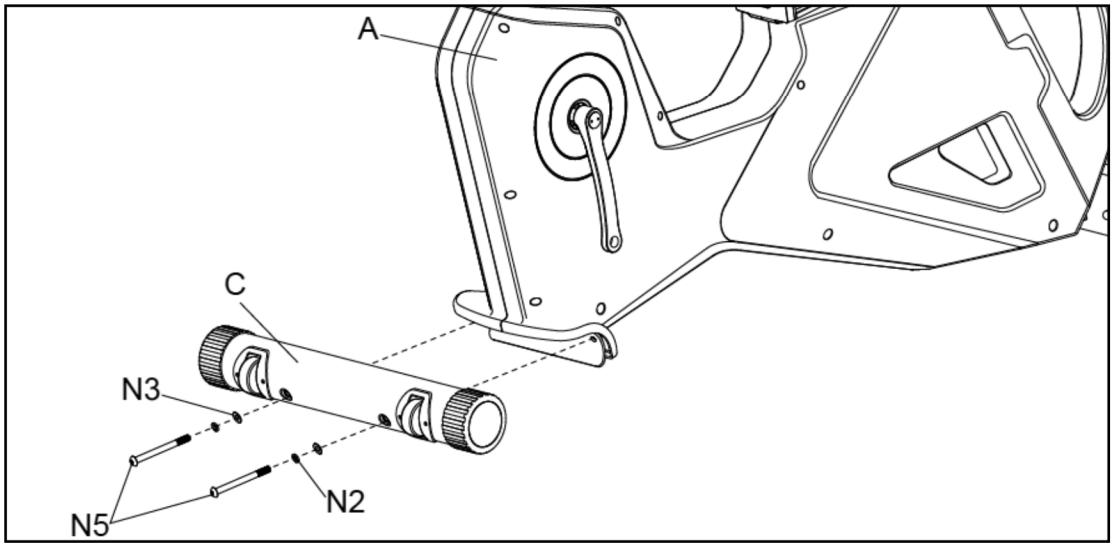

ASSEMBLY - CONTINUED

3. Connect the **Sensor Wires (A33) and (A34)** to the **Wires (A4) and (A36).**

Secure the **Central Support Tube (D)** to the **Main Frame (A)** using 8 **Screws (N6)** using the **6mm Wrench**.

Release the **Preset Screw (N11)** from the **Support Tube (D)** first, then secure the **Water Bottle Holder (M1)** to the **Support Tube (D)** using the same screw and the **6mm Wrench**.

Loosen the **Preset Nuts (D2)** and **Washers (D1)** found on the **Front Handlebar (I)**.

Equip the **Front Handlebar (I)** to the **Support Tube (D)** using the **6mm Allen Wrench** to fasten the previously preset **Washers (D1) and Nuts (D2**).

Note: Make sure that the wires are connected securely. Be careful not to pinch the wire while assembling.

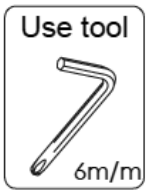

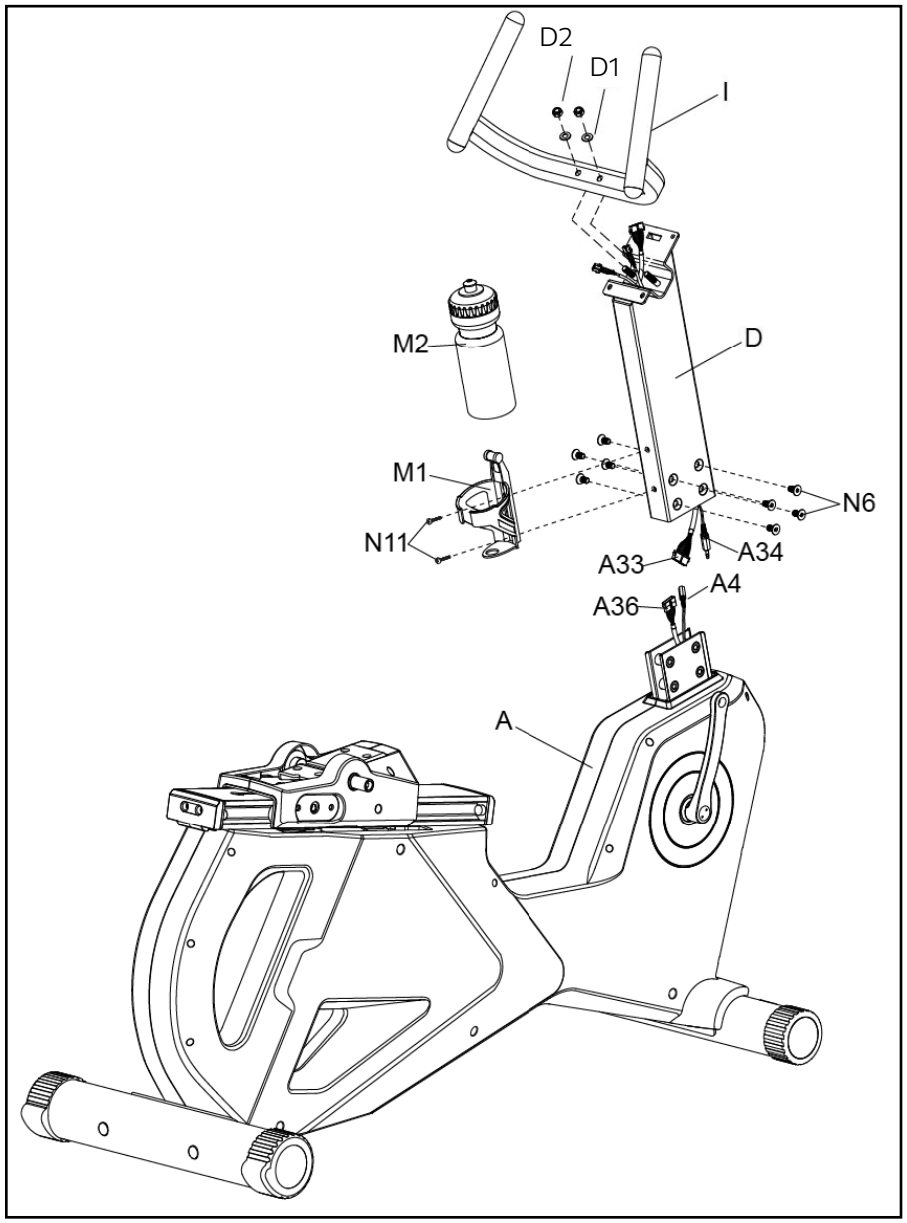

ASSEMBLY - CONTINUED

4. Secure the **Saddle Tube (P)** with the **Sliding Tracking (A10)** using 4 **Screws (N13)** and the **6mm Wrench**.

Connect the **Sensor Wire (J1-1)** with the **Wire (A3)**.

Secure the **Left Side Handlebar (J1)** with the **Saddle Tube (P)** using 2 **Screws (N8)**, 2 **Spring Washers (N2)**, and 2 **Washers (N3)** and the **6mm Wrench**.

Note: Push and store excess wire into the **Side Handlebar (J)** by using the end cap under the handlebar.

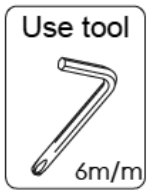

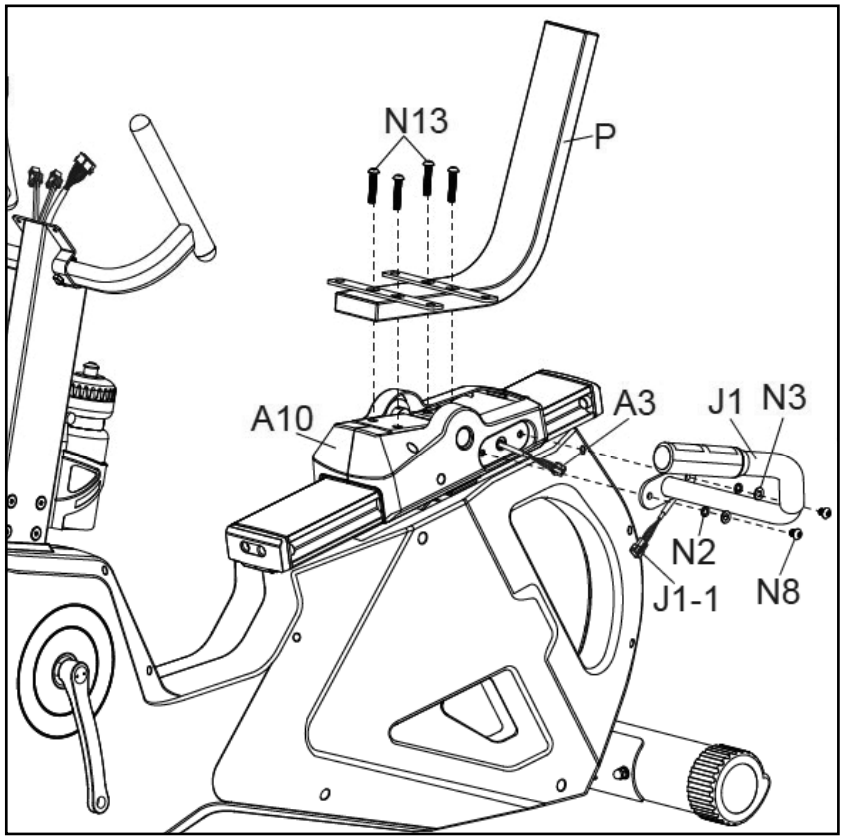

ASSEMBLY - CONTINUED

5. Repeat the steps above to secure the **Right Side Handlebar (J2)**.

Slide the **Braking Handlebar (E)** under the **Saddle Tube (P)** and secure with 1 **Stopping Screw (N10)**.

Secure the **Seat Pad (G)** onto the **Sliding Track (P)** using 4 **Screws (N8)**, installing from underneath the **Saddle Tube**.



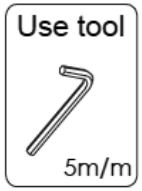

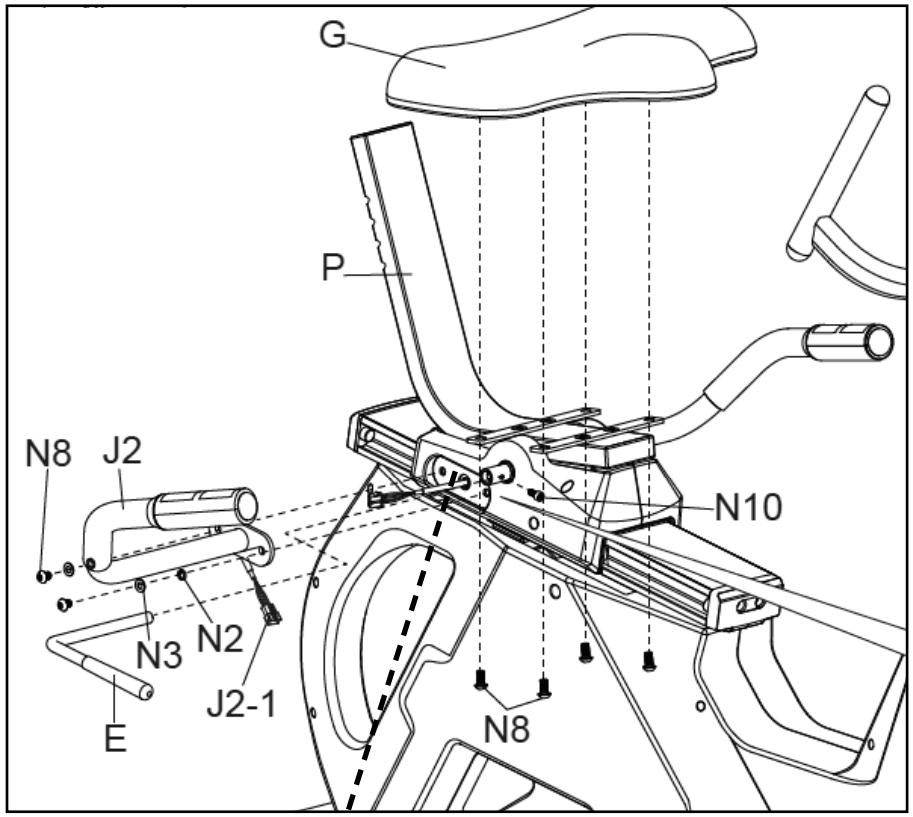

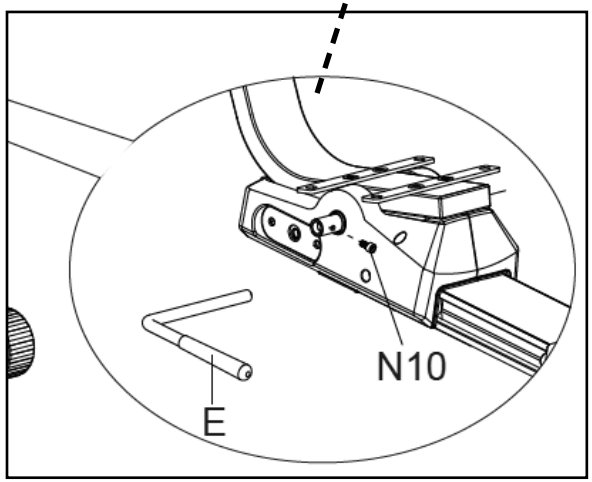

ASSEMBLY - CONTINUED

6. Assemble the **Backrest (H)** onto the **Back Pad Support Tube (P)** and secure it tightly using 1 **Screw (N7)** and 1 **Washer (N14)** using the **6mm Wrench**.

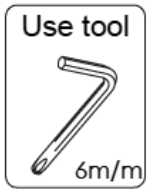

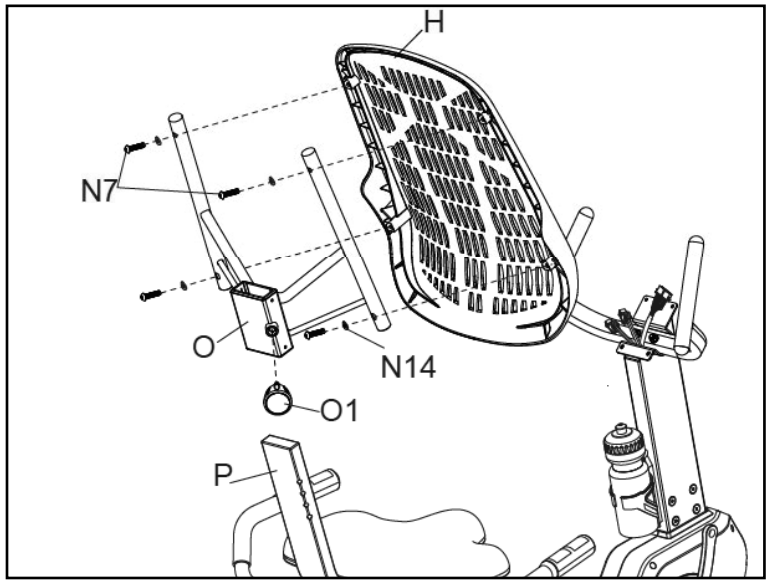

7. Locate the **Console (F)** and connect the **Sensor Wires (A33, A34)** to the wires from the console.

Gently push all of the wires into the console tube.
Slide the Console onto the console tube.

Use the 2 **Pre-installed Screws (N12)** to secure the console.

Note: **Screws (N12)** are preinstalled on the back side of the console. Remove before sliding onto the console tube.

Note: The console angle can be adjusted according to the user's needs. Adjust for your preferred angle.

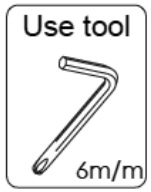

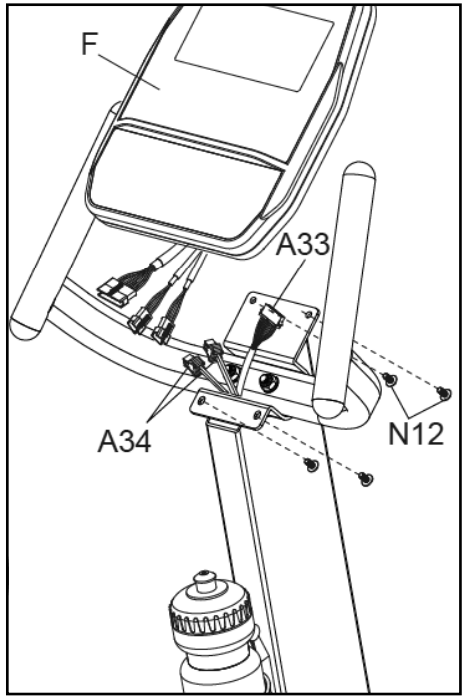

ASSEMBLY - CONTINUED

8. Thread the **Right Pedal (L-R)** into the Right Crank of the **Main Frame (A)**.

Secure it by turning it clockwise to tighten.

Note: **Right Pedal (L-R)** is marked with an “R”.

Repeat for the **Left Pedal (L-L)**, securing it by turning it counter-clockwise to tighten.

Note: **Left Pedal (L-L)** is marked with an “L”.

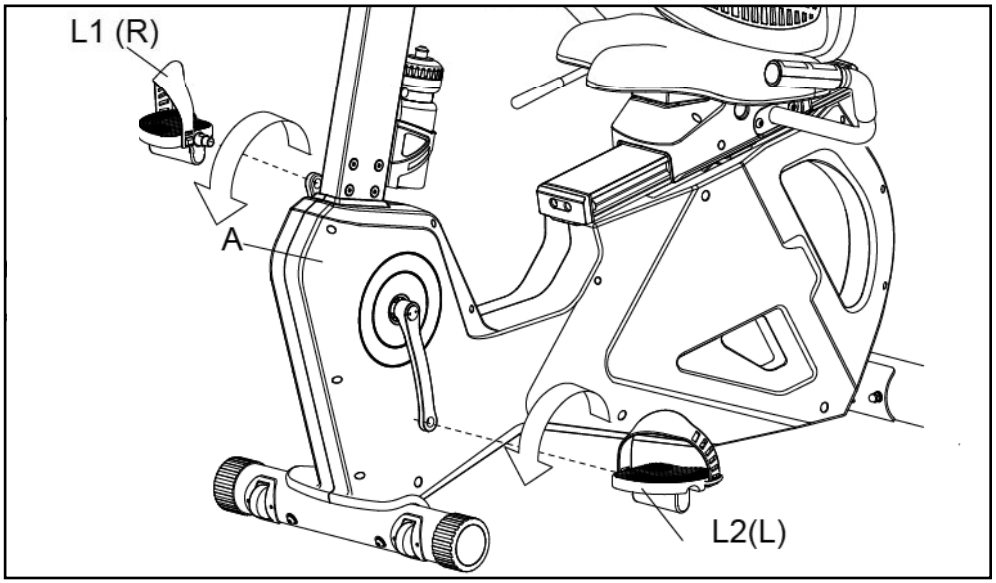

ADJUSTING YOUR MACHINE

Adjusting the Seat

Push the seat slide adjustment handle forward, then slide the seat up and down until desired position is found. When desired position is found, pull the adjustment handle back into the upward position.

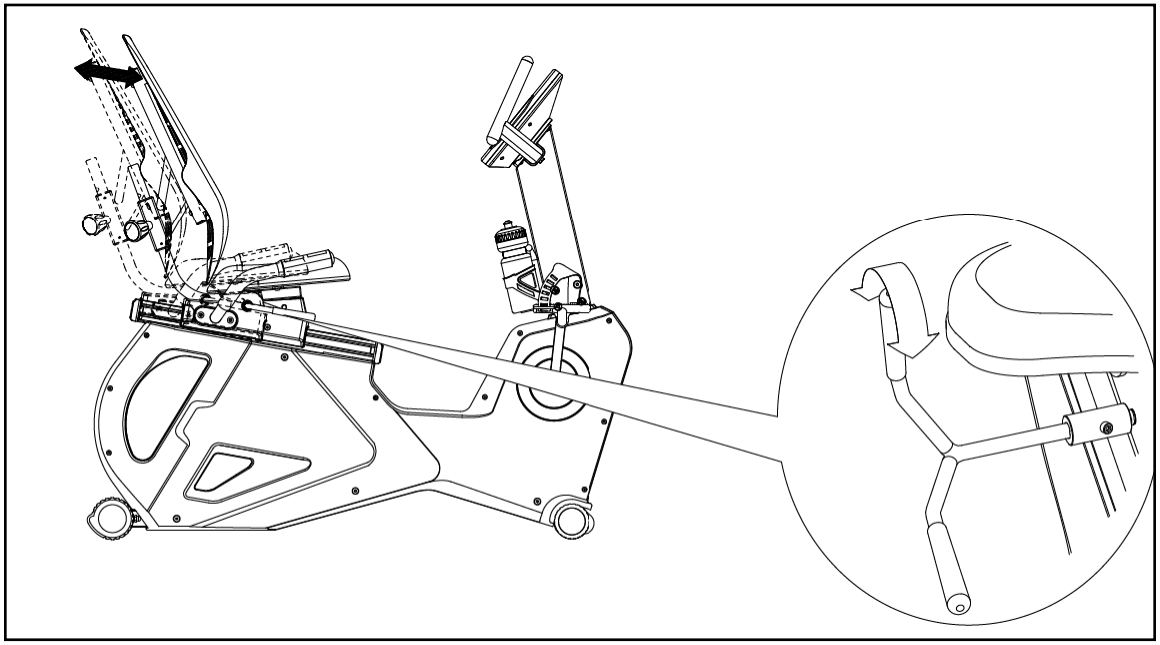

ADJUSTING YOUR MACHINE - CONTINUED

Adjusting the Backrest

The height of the mesh backrest can be adjusted up and down. To find the proper height, loosen and tighten the knob.

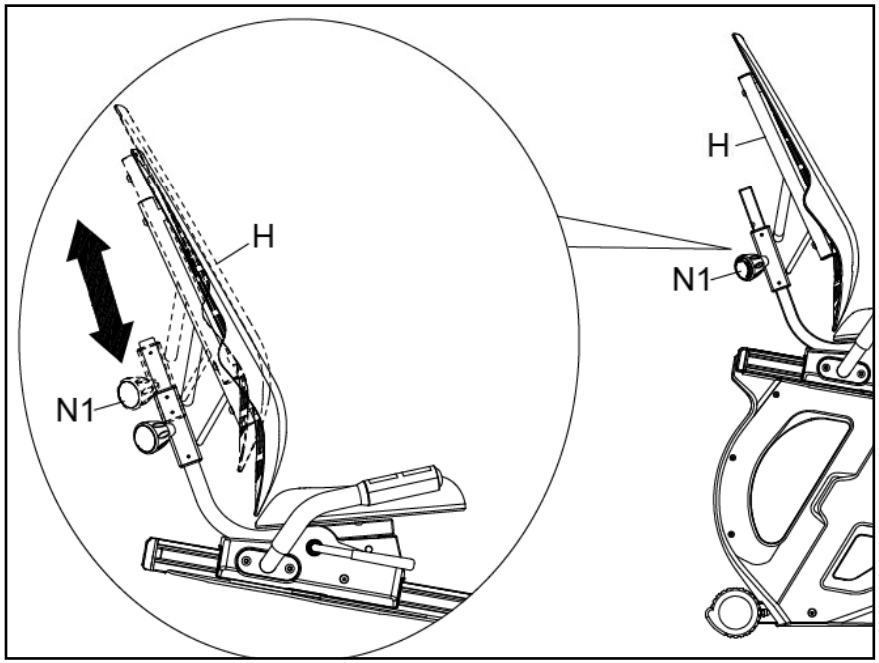

Moving the Machine

The front stabilizer has built-in transport wheels. Stand at the rear of the machine and lift it up until the weight of the machine is transferred to the transport wheels. You can now easily move the machine to a new location.

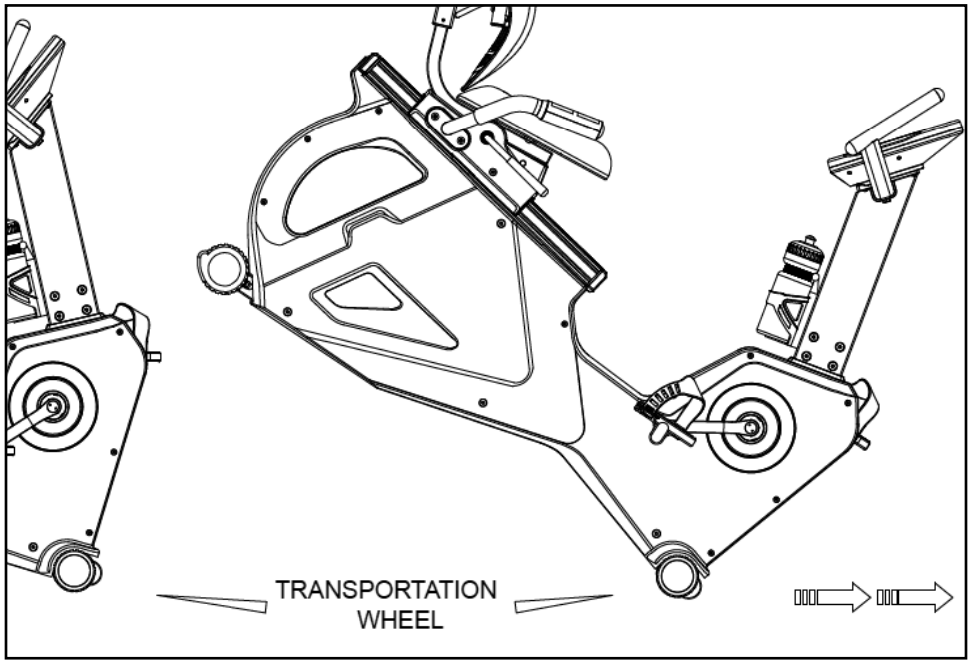

PLUGGING IN

Position the Machine with the consideration of convenience and access.

The adaptor port is located at the rear of the Main Frame of the machine.

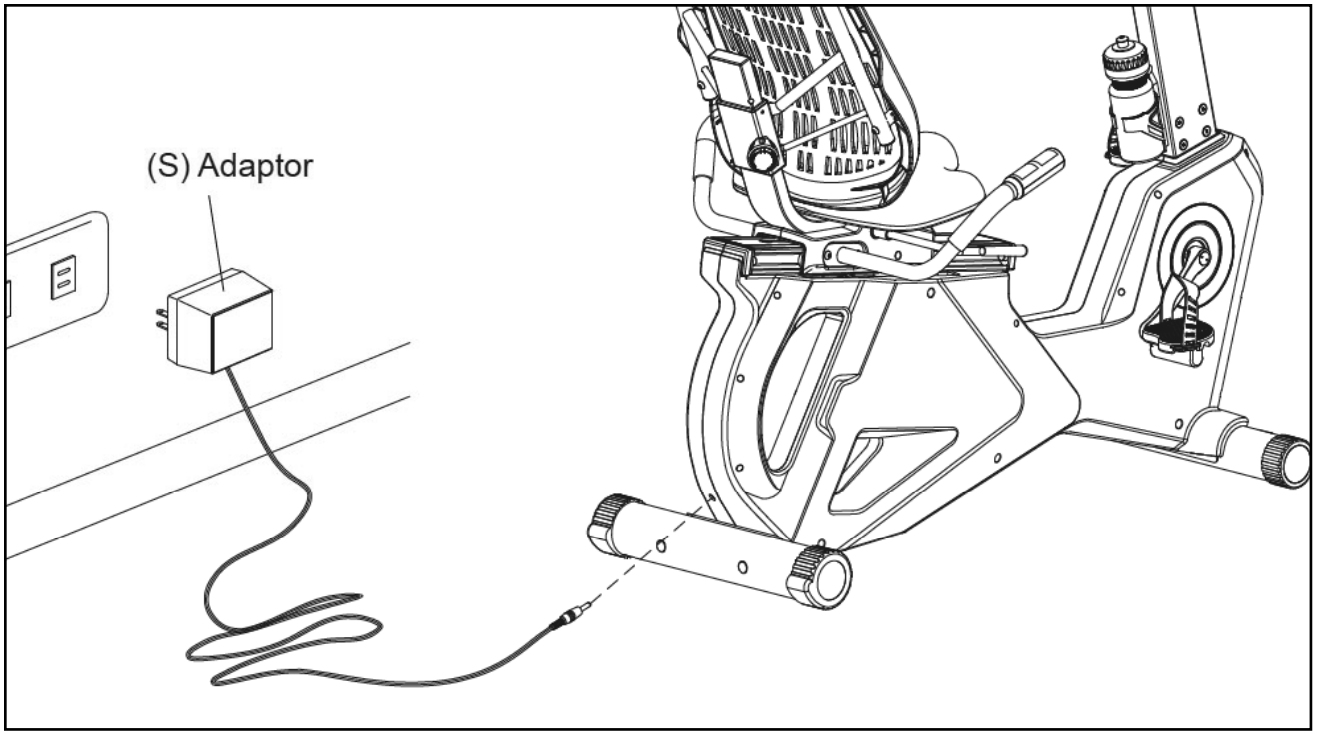

ABOUT YOUR MACHINE

Always use care and caution when operating your machine. Follow instruction in this manual to ensure safe operation and maintenance of your treadmill

Your new XTERRA Fitness treadmill has Bluetooth connectivity to give you access to the most advanced workout experiences available. Follow the instructions on page 20 to learn more about using the Bluetooth capabilities to their fullest potential.

Downloading the XF Connect app will help unlock more features - such as tracking workouts and sharing data via Google Fit and Apple Fitness. Simply search for "XF Connect" in the app store on your smartphone or tablet, or scan the QR code on the right



The XF Connect app is available on Google Play and the Apple App Store. Scan the QR Code below, and quickly and easily sign up to start taking your workout experience to a whole new level.

Available on the App Store

GET IT ON Google play

Be sure to follow XTERRA Fitness on your favorite social media platforms to view and share the latest fitness videos, images, and news.

facebook.com/XterraFitness

www.instagram.com/XterraFitness

youtube.com/user/XterraFitnessOnline

USING THE XF CONNECT APP

In order to help you achieve your exercise goals, your new exercise machine comes equipped with a Bluetooth® transceiver that will allow it to interact with selected phones or tablet computers via the XF Connect App. Just download the free XF Connect App from the Apple Store or Google Play, and then follow the instructions in the App to sync with your exercise machine.

Press the "DISPLAY" button from the APP to view the display of the current workout data. When your exercise is complete, choose "END & SAVE WORKOUT" to store the workout data.

1. Download the App by scanning the QR code on the right.
2. Open the App on your device (phone or tablet) and make sure Bluetooth® is enabled on your device (phone or tablet).
3. In the App click the Bluetooth® icon to search for your XF Connect equipment.
4. Under the Bluetooth® scan result list, select the machine for connect. When the App and equipment are synced, the Bluetooth® icon on the equipment's console display will light up. Click "DISPLAY", you may now start using your XF Connect App.
5. When your exercise is complete, choose "END & SAVE WORKOUT" to store the workout data. You will be prompted to sync your data with each available fitness cloud site. Please note, you will have to download the applicable compatible fitness App, such as Strava, MapMyFitness, Fitbit, etc., in order for the icon to be active and available.

Note: Your device will need to be running on a minimum operating system of IOS 13.1 or Android 8.0 for the XF Connect App to operate properly.



APP CONNECTION

This console connects to 3rd party fitness apps on your phone or tablet via Bluetooth. Once console is connected to your phone or tablet via Bluetooth, the console will not display. Your workout feedback will be displayed on your device.

KINOMAP

1. Open the Kinomap App and click in the lower right corner to add devices.
2. Click equipment management, then click the “+” to start adding equipment.
3. Click the “Treadmill” graphic, then scroll through brand connection screen to find and select FTMS or iConsole.
4. Select Treadmill Machine, then Bluetooth device.
5. Press the Home Button to return to the Home screen after adding the device.
6. To select a training video, you must select the type of walk and press the button to enter the training screen.
7. Start training, pressing the pause button at the top of the screen to stop.
8. From the pause screen you can continue the workout or exit to end the workout.

Note: This machine is compatible with other 3rd party fitness apps using FTMS protocol.

CONSOLE SCREEN - OVERVIEW



FUNCTION BUTTONS

Start / Stop:	To start or stop training
Recovery:	To test the heart rate recovery status
Up Arrow:	To select the training mode or adjust function value up
Down Arrow:	To select the training mode or adjust function value down
Reset:	In Stop Mode, press the button back to return to the main menu
Program:	To quickly select preferred pre-set programs (12 programs)
Mode:	To start workout

POWERING ON

1. Connect the power supply to the monitor or press the RESET button or 3 seconds, the LCD will display all segment with a long-beep sound for 1 seconds and display 78.0 as seen in Figure 1 &2.

2. User may press the Up/Down arrows to select User 0 - 4 and press MODE to confirm selection. (Figure 3 & 4).

3. Preset the user information for Sex, Age, Height, Weight using the Up/Down arrows to adjust the values. (Figure 5-8).

Value Range of User Data

Item	Range
Sex	Male / Female
Age	10 - 99
Height (cm)	100 - 200
Weight (kg)	20 - 150

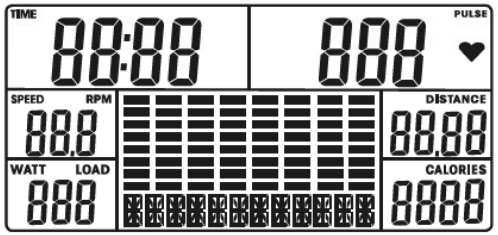

(FIGURE 1)

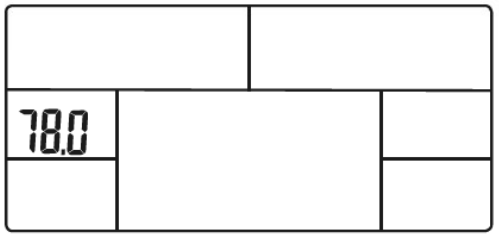

(FIGURE 2)

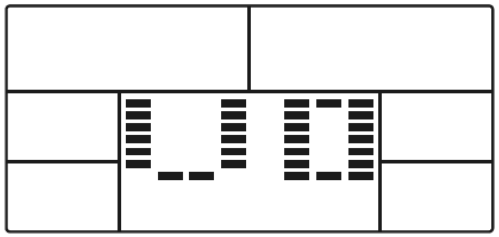
(FIGURE 3)

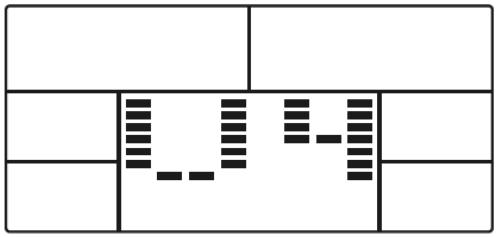
(FIGURE 4)

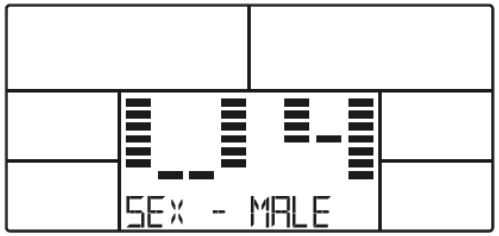

(FIGURE 5)

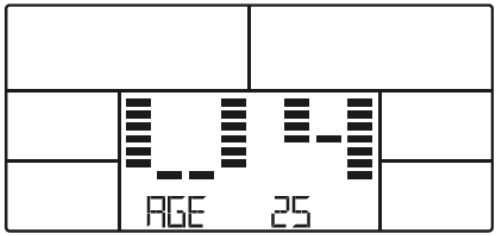

(FIGURE 6)

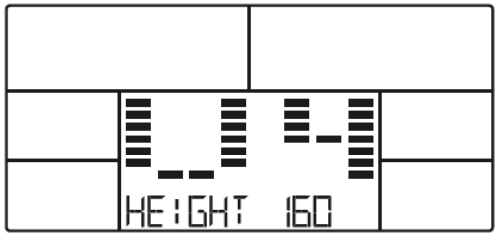

(FIGURE 7)

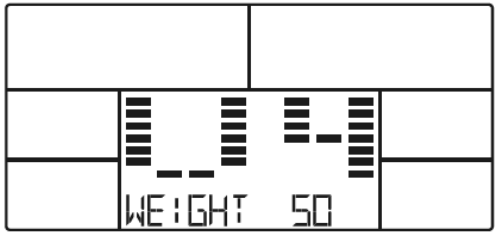

(FIGURE 8)

USER DEFINED MODE OPERATION

1. After confirming the user's data, press the MODE button to begin operation, using the Up/ Down Arrows to choose the operation mode.
   - Manual
   - Program
   - Fitness
   - Watt
   - User Program
   - HRC

Item	Range
Time	0:00 - 99:00
Speed	0.0 - 99.9
Distance	0.00 - 99.95
Calories	0 - 990
Pulse	60 - 220
RPM	15 - 999
Watt	10 - 350
Load	1 -16

MANUAL

Manual Mode

1. Press and hold the **Reset** button for 3 seconds, choosing User and confirming the user data. Alternatively, press **Reset** only.
2. Select **MANUAL** mode by using the **Up/Down Arrows** and press **MODE** to confirm. (Figure 8)
3. Select the Load level and press **MODE** for confirmation. (Figure 9)
4. Pre-set the values of Time, Distance, Calories, and Target Pulse (Figures 10 - 13)
5. Press **Start** to begin your workout. You can adjust the load level by using the **Up/Down Arrows.** (Figure 14)
6. Press **Stop** to pause your workout. Press the **Reset** button to go back to the chosen mode; or press and hold **Reset** for 3 seconds to go back to the main menu. (Figure 15)



(FIGURE 8)



(FIGURE 9)

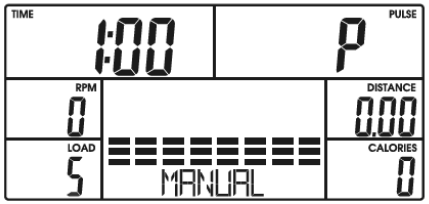

(FIGURE 10)

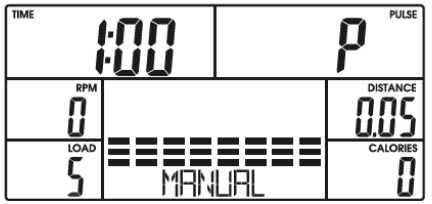

(FIGURE 11)

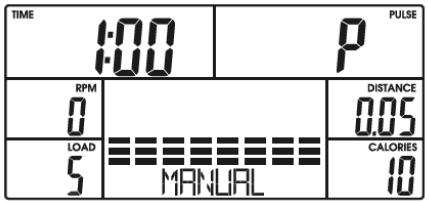

(FIGURE 12)

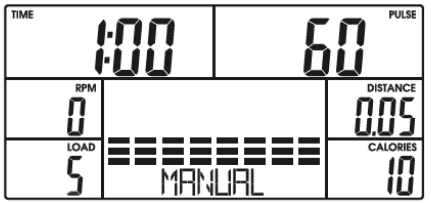

(FIGURE 13)



(FIGURE 14)



(FIGURE 15)

PROGRAMS

Program Mode

1. Press and hold the **Reset** button for 3 seconds, choosing User and confirming the user data. Alternatively, press **Reset** only.
2. Select **PROGRAM** mode by using the **Up/Down Arrows** and press **MODE** to confirm. (Figure 16) Press the **Up/ Down Arrows** to select the desired program 1 - 12 (Figure 17); or press one of the program keys P1 - P12 for quick selection. (Figure 18)
3. Adjust the Load level as desired and press **MODE** for confirmation. (Figure 19)
4. Set the values of Time, Distance, Calories, and Target Pulse (Figures 20 - 23)
5. Press **Start** to begin your workout. You can adjust the load level by using the **Up/Down Arrows.** (Figure 14)
6. Press **Stop** to pause your workout. Press the **Reset** button to go back to the main menu; or press and hold **Reset** for 3 seconds to enter standby mode.



(FIGURE 16)

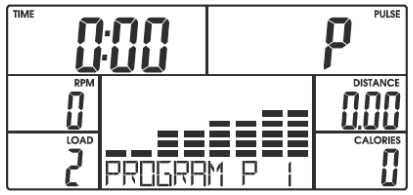

(FIGURE 17)



(FIGURE 18)



(FIGURE 19)

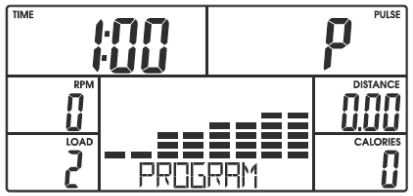

(FIGURE 20)



(FIGURE 21)

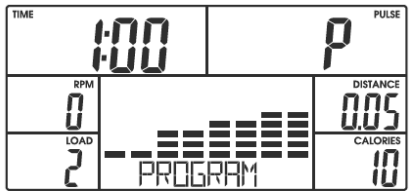

(FIGURE 23)



(FIGURE 23)

PROGRAMS - PRESET PROFILES

P1

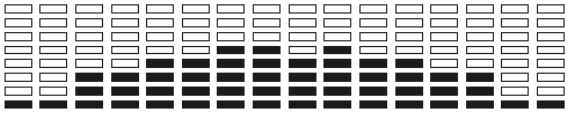

P2

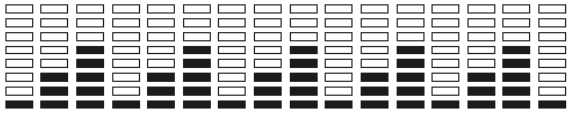

P3

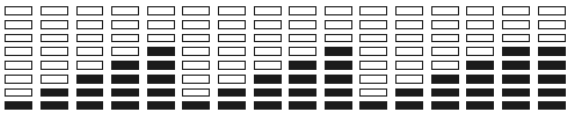

P4

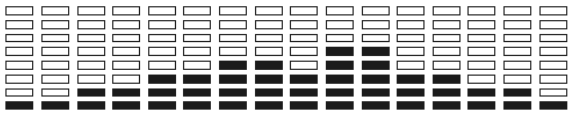

P5

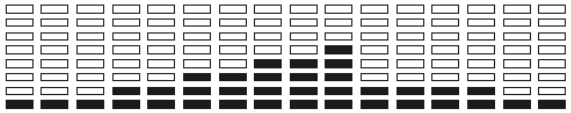

P6

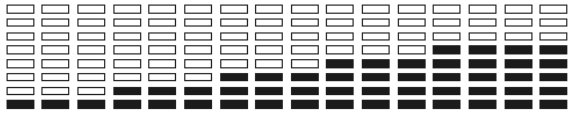

P7

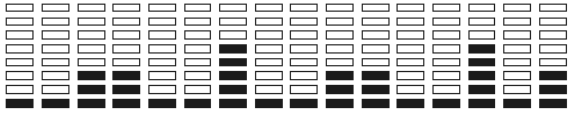

P8

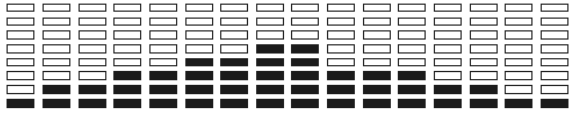

P9

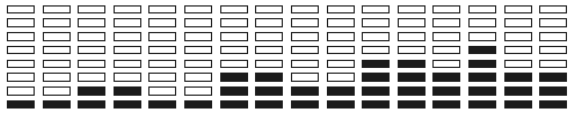

P10

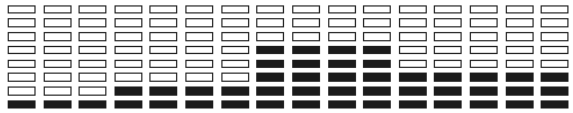

P11

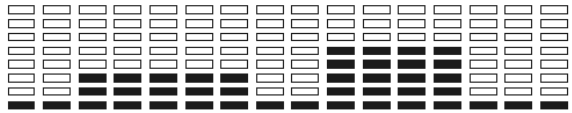

P12

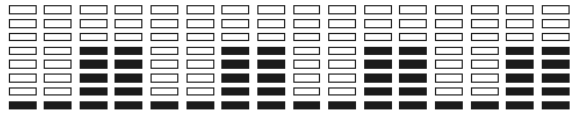

FITNESS PROGRAM

1. Press and hold the **Reset** button for 3 seconds, choosing User and confirming the user data. Alternatively, press **Reset** only.
2. Select **FITNESS** mode by using the **Up/Down Arrows** and press **MODE** to confirm. (Figure 24-25)
3. Press **Start** to begin your workout. You can adjust the load level by using the **Up/Down Arrows.**
4. After 12 minutes the display will automatically show the results of your workout.
5. Press **Stop** to pause your workout. Press the **Reset** button to go back to the main menu; or press and hold **Reset** for 3 seconds to enter standby mode.



(FIGURE 24)



(FIGURE 25)

WATT MODE

1. Press and hold the **Reset** button for 3 seconds, choosing User and confirming the user data. Alternatively, press **Reset** only.
2. Select **WATT** mode by using the **Up/Down Arrows** and press **MODE** to confirm. (Figure 26)
3. Select the Watt level and press **MODE** for confirmation. (Figure 27)
4. Set the values of Time, Distance, Calories, and Target Pulse (Figures 28-31)
5. Press **Start** to begin your workout. You can adjust the watt level by using the **Up/Down Arrows.**
6. Press **Stop** to pause your workout. Press the **Reset** button to go back to the main menu; or press and hold **Reset** for 3 seconds to enter standby mode.

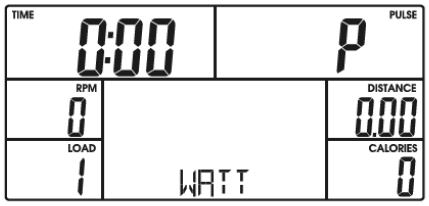

(FIGURE 26)

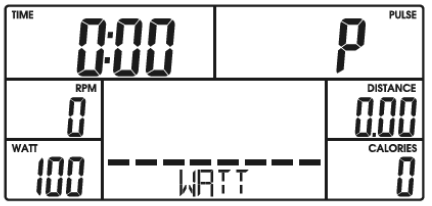

(FIGURE 27)

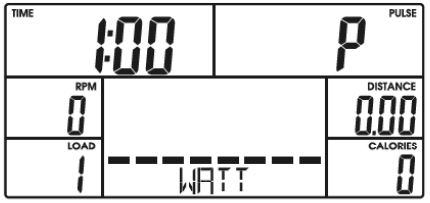

(FIGURE 28)



(FIGURE 29)



(FIGURE 30)



(FIGURE 31)

USER MODE

1. Press and hold the **Reset** button for 3 seconds, choosing User and confirming the user data. Alternatively, press **Reset** only.
2. Select **USER** mode by using the **Up/Down Arrows** and press **MODE** to confirm. (Figure 32)
3. Select the column of load level and press **MODE** for confirmation. Press the MODE button to switch to the next column. (Figure 33) When done, press and hold MODE for 3 seconds to confirm.
4. Set the values of Time, Distance, Calories, and Target Pulse (Figures 34-37)
5. Press **Start** to begin your workout. You can adjust the load level by using the **Up/Down Arrows.** (Figure 14)
6. Press **Stop** to pause your workout. Press the **Reset** button to go back to the main menu; or press and hold **Reset** for 3 seconds to enter standby mode.



(FIGURE 32)



(FIGURE 33)



(FIGURE 34)



(FIGURE 35)



(FIGURE 36)



(FIGURE 37)

HEART RATE CONTROL PROGRAM

1. Press and hold the **Reset** button for 3 seconds, choosing User and confirming the user data. Alternatively, press **Reset** only.
2. Select **HRC** mode by using the **Up/Down Arrows** and press **MODE** to confirm. (Figure 38)
3. Select the from the different heart rates 55%, 75%, 90% or Target by using the Up/Down Arrows. (Figure 39-42) The heart rate value will be different based on the selected age value.
4. To select a Target HR use the Up/Down Arrows to adjust to the desired value.
5. Set the values of Time, Distance, Calories, and Target Pulse (Figures 43-45)
6. Press **Start** to begin your workout. The load level will adjust according to your current heart rate.
7. Press **Stop** to pause your workout. Press the **Reset** button to go back to the main menu; or press and hold **Reset** for 3 seconds to enter standby mode.



(FIGURE 38)

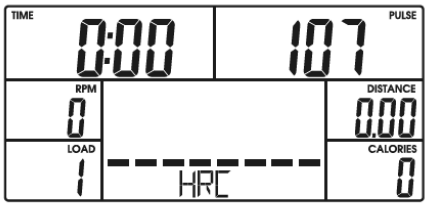

(FIGURE 39)

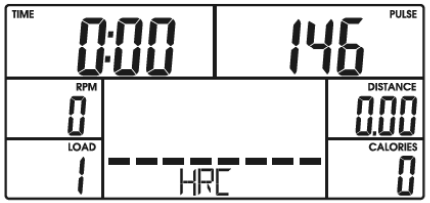

(FIGURE 40)

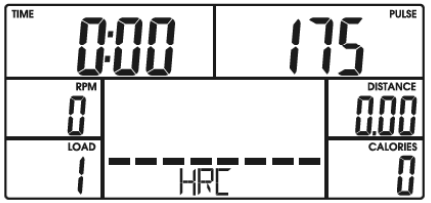

(FIGURE 41)

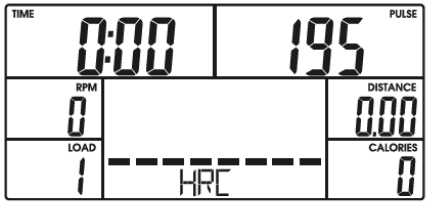

(FIGURE 42)



(FIGURE 43)



(FIGURE 44)



(FIGURE 45)

HEART RATE CHEST STRAP* (NOT INCLUDED)

1. Attach the transmitter to the elastic strap using the interlocking key.
2. Adjust the strap as tightly as possible as long as the strap is not too tight to remain comfortable.
3. Position the transmitter with the logo centered in the middle of your torso facing away from your chest (some people must position the transmitter slightly left of center). Attach the final end of the elastic strap by inserting the round end and, using the locking parts, secure the transmitter and strap around your chest.
4. Position the transmitter directly below the pectoral muscles.
5. Sweat is the best conductor to measure very minute heart beat electrical signals. However, plain water can also be used to pre-wet the electrodes (2 ribbed oval areas on the reverse side of the belt and both sides of the transmitter). It's also recommended that you wear the transmitter strap a few minutes before your work out. Some users, because of body chemistry, have a more difficult time in achieving a strong, steady signal at the beginning. After "warming up", this problem lessens.
6. Your workout must be within range - distance between transmitter/receiver – to achieve a strong steady signal. The length of range may vary somewhat but generally stay close enough to the console to maintain good, strong, reliable readings. Wearing the transmitter directly on bare skin assures you of proper operation. If you wish, you may wear the transmitter over a shirt. To do so, wet the areas of the shirt that the electrodes will rest upon.

Note: The transmitter is automatically activated when it detects activity from the user's heart. Additionally, it automatically deactivates when it does not receive any activity. Although the transmitter is water resistant, moisture can have the effect of creating false signals, so you should take precautions to completely dry the transmitter after use to prolong battery life (estimated transmitter battery life is 2500 hours). The replacement battery is Panasonic CR2032.

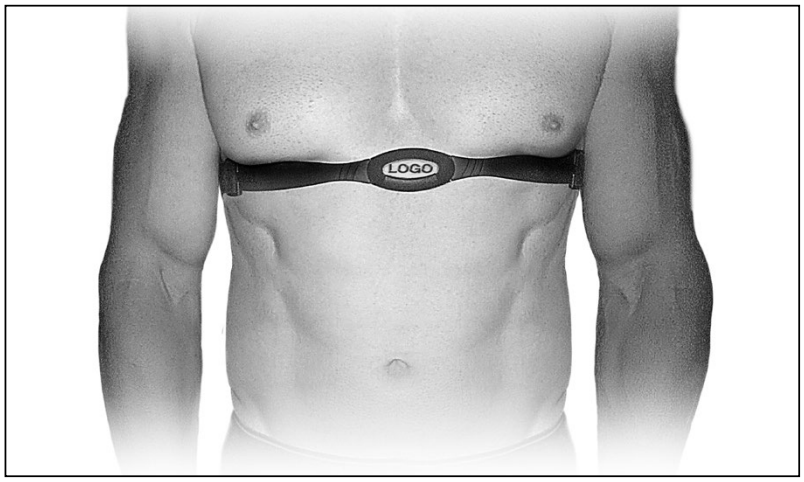

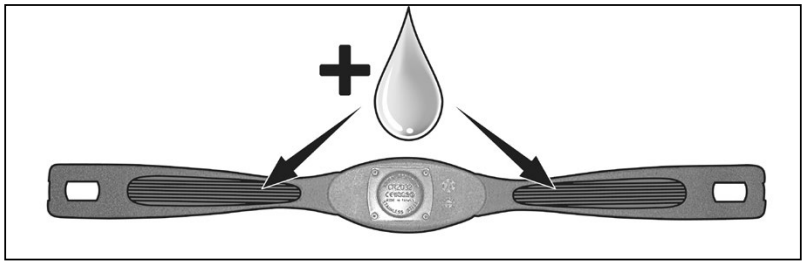

CHEST STRAP WARNING* (NOT INCLUDED)

Erratic Operation

Caution! Do not use this treadmill for Heart Rate programs unless a steady, solid Actual Heart Rate value is being displayed. High, wild, random numbers being displayed indicate a problem.

Areas to look for interference which may cause erratic heart rate:

1. Microwave ovens, TV's, small appliances, etc.
2. Fluorescent lights.
3. Some household security systems.
4. Perimeter fence for a pet.
5. Some people have problems with the transmitter picking up a signal from their skin. If you have problems try wearing the transmitter upside down. Normally the transmitter will be oriented so the XTERRA Fitness logo is right side up.
6. The antenna that picks up your heart rate is very sensitive. If there is an outside noise source, turning the whole machine 90 degrees may de-tune the interference.
7. Another Individual wearing a transmitter within 3' of your machine's console.

If you continue to experience problems contact XTERRA Fitness.

HEART RATE EXERTION

The old motto, “no pain, no gain”, is a myth that has been overpowered by the benefits of exercising comfortably. A great deal of this success has been promoted by the use of heart rate monitors. With the proper use of a heart rate monitor, many people find that their usual choice of exercise intensity was either too high or too low and exercise is much more enjoyable by maintaining their heart rate in the desired benefit range.

To determine the benefit range in which you wish to train, you must first determine your Maximum Heart Rate. This can be accomplished by using the following formula: 220 minus your age. This will give you the Maximum Heart Rate (MHR)for someone of your age. To determine the effective heart rate range for specific goals you simply calculate a percentage of your MHR. Your Heart rate training zone is 50% to 90% of your maximum heart rate. 60% of your MHR is the recommended for burning fat while 80% is recommended for strengthening the cardio vascular system. This 60% to 80% is the zone to stay in for maximum benefit.

For someone who is 40 years old their
target heart rate zone is calculated:
220 – 40 = 180 (maximum heart rate)
180 x .6 = 108 beats per minute (60% of maximum)
180 X .8 = 144 beats per minute (80% of maximum)
So for a 40 year old the training zone would
be 108 to 144 beats per minute.

If you enter your age during programming the console will perform this calculation automatically. Entering your age is used for the Heart Rate programs. After calculating your MHR you can decide upon which goal you would like to pursue.

The two most popular reasons for, or goals, of exercise are cardiovascular fitness (training for the heart and lungs) and weight control. If your goal is cardiovascular fitness or if it is weight loss, it can be achieved by training at 80% or 60%, respectively, of your MHR on a schedule approved by your physician. Consult your physician before participating in any exercise program.

With this XTERRA Fitness unit you may use the heart rate monitor feature without using the Heart Rate program.

HEART RATE - PERCEIVED EXERTION

Heart rate is important but listening to your body also has a lot of advantages. There are more variables involved in how hard you should workout than just heart rate. Your stress level, physical health, emotional health, temperature, humidity, the time of day, the last time you ate and what you ate all contribute to the intensity at which you should workout. If you listen to your body it will tell you all of these things.

The rate of perceived exertion (RPE), also known as the Borg scale, was developed by Swedish physiologist G.A.V. Borg.
This scale rates exercise intensity from 6 to 20 depending upon how you feel or the perception of your effort.
The scale is found to the side of the page:

You can get an approximate heart rate level for each rating by simply adding a zero to each rating. For example a rating of 12 will result in an approximate heart rate of 120 beats per minute. Your RPE will vary depending on the factors discussed earlier. If your body is strong and rested, you will feel strong and your pace will feel comfortable. When your body is in this condition, you are able to train harder and the RPE will support this. If you are feeling tired and sluggish, it is because your body needs a break. In this condition, your pace will feel difficult. Again, this will show up in your RPE and you will train at the proper level for that day.

Rating Perception of Effort

6	Minimal
7	Very, Very Light
8	Very, Very Light +
9	Very Light
10	Very Light +
11	Fairly Light
12	Comfortable
13	Somewhat Hard
14	Somewhat Hard +
15	Hard
16	Hard +
17	Very Hard
18	Very Hard +
19	Very, Very Hard
20	Maximal

RECOVERY POST WORKOUT

After exercising for a period of time, keep holding the handgrips and press the RECOVERY button. All functions will stop except Time which will begin counting down from 00:60 to 00:00. The screen will then display your heart rate recovery status with a value of F1 to F6.

F1 denotes the quickest “best” recovery value; F6 denotes the slowest value. Users may keep exercising to improve the heart rate recovery status. (Press the RECOVERY button again to return to the main menu.)

Note:
If the heart rate is undetected or connected only intermittently, then the display will show “ER” (Error). (Figure 48)



(FIGURE 46)

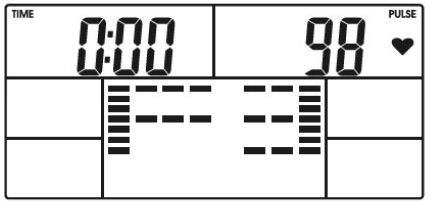

(FIGURE 47)

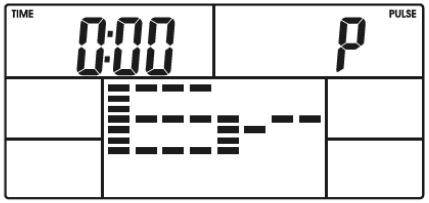

(FIGURE 48)

MAINTENANCE & CARE

Post-Workout Machine Care

1. Store your machine in a dry and clean area when not in use.
2. Use a slightly damp cloth to clean areas where sweat or oil made contact with the machine.
3. Use a microfiber cloth to clean the display and remove unwanted oils and other things that may damage the screen.
4. Avoid leaving paper or other small debris in the cupholders.

Sanitizing Your XTERRA Fitness Equipment

- Unupholstered high-contact surfaces (hard plastics) can be sanitized using a 75% isopropyl alcohol solution and a clean, dry cloth. Spray surfaces to be sanitized, and use the dry cloth to wipe clean. Allow surfaces to dry before using.
- For upholstered or soft-plastic surfaces, use a conditioner after sanitizing. Be sure to follow the instructions provided by the conditioner manufacturer to ensure proper use of the conditioner.
- Alternatively, you can make your own spray by mixing the proper ratio of isopropyl alcohol and distilled water to reach a 75% solution.

EXPLODED VIEW DIAGRAM

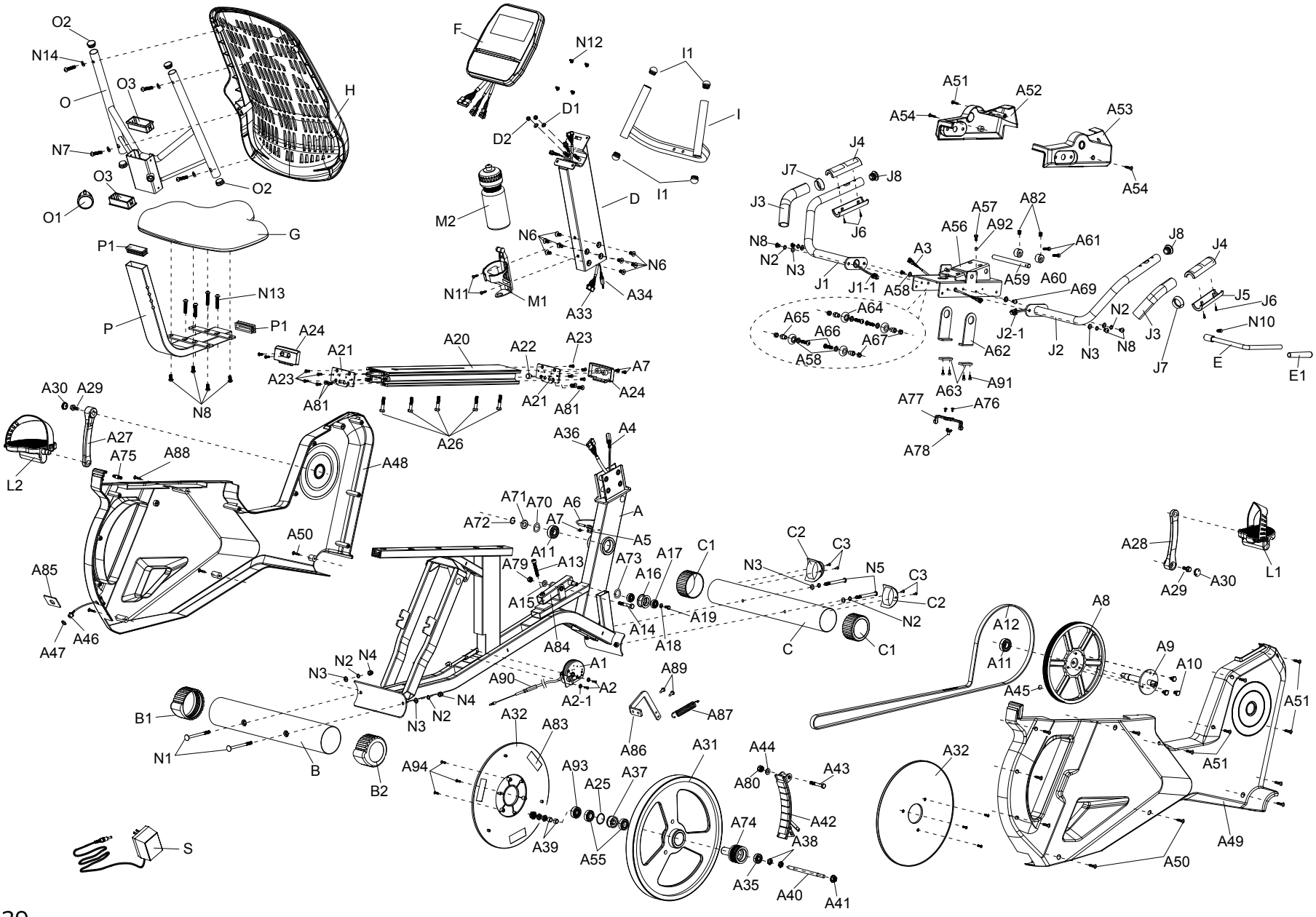

WARRANTY - RESIDENTIAL

Effective August 01, 2023- **SB600 Recumbent Bike LIMITED WARRANTY**

XTERRA Fitness Inc. warrants all its home use Recumbent Bike parts for a period of time listed below, from the date of retail sale, as determined by a sales receipt or in the absence of a sales receipt, eighteen (18) months from the original factory shipping date. XTERRA Fitness's responsibilities include providing new or remanufactured parts, at XTERRA Fitness's option, and technical support to our independent dealers and servicing organizations. In the absence of a dealer or service organization, these warranties will be administered by XTERRA Fitness directly to a consumer. The warranty period applies to the following components:

Home Use Limited Warranty

Warranty	Frame	Parts	Labor
Residential	Lifetime	2 Years	1 Year

RESPONSIBILITIES OF THE CONSUMER

This warranty applies only to products in ordinary household use, and the consumer/facility is responsible for the items listed below:

1. Proper use of the Recumbent Bike in accordance with the instructions provided in this manual
2. Proper installation in accordance with instructions provided with the Recumbent Bike and with all local electric codes.
3. Expenses for making the Recumbent Bike accessible for servicing, including any item that was not part of the Recumbent Bike at the time it was shipped from the factory.
4. Damages to the Recumbent Bike finish during shipping, installation or following installation.
5. Routine maintenance of this unit as specified in this manual.

WARRANTY - CONTINUED

What is not covered?

EXCLUSIONS

This warranty does not cover the following:

1. CONSEQUENTIAL, COLLATERAL, OR INCIDENTAL DAMAGES SUCH AS PROPERTY DAMAGE AND INCIDENTAL EXPENSES RESULTING FROM ANY BREACH OF THIS WRITTEN OR ANY IMPLIED WARRANTY.
   Note: Some states do not allow the exclusion or limitation of incidental or consequential damages, so this limitation or exclusion may not apply to you.
2. Service call reimbursement to the consumer. Service call reimbursement to the dealer that does not involve malfunction or defects in workmanship or material, for units that are beyond the warranty period, for units that are beyond the service call reimbursement period, for Recumbent Bike not requiring component replacement, or Recumbent Bike not in ordinary household or light commercial use.
3. Damages caused by services performed by persons other than authorized XTERRA Fitness service companies; use of parts other than original XTERRA Fitness parts; or external causes such as corrosion, discoloration of paint or plastic, alterations, modifications, abuse, misuse, accident, improper maintenance, inadequate power supply, or acts of God.
4. Products with original serial numbers that have been removed or altered.
5. Products that have been: sold, transferred, bartered, or given to a third party.
6. XTERRA Fitness reserves the right to request proof of purchase if no warranty record exists for the product.
7. THIS WARRANTY IS EXPRESSLY IN LIEU OF ALL OTHER WARRANTIES EXPRESSED OR IMPLIED, INCLUDING THE WARRANTIES OF MERCHANTABILITY AND/OR FITNESS FOR A PARTICULAR PURPOSE.
8. Product use in any environment other than a residential setting or non-dues paying facility with 5 hours use or less per day.
9. Warranties outside of the United States may vary. Please contact your local dealer for details.

Product features or specifications as described or illustrated are subject to change without notice. All warranties are made by XTERRA Fitness, Inc. This warranty applies only in the 48 contiguous United States. NOTE: This does not include Alaska or Hawaii.

WARRANTY - CONTINUED

Responsibilities of the Owner

SERVICE

Keep your bill of sale. Twelve (12) months from the date on the bill of sale or eighteen (18) months from the date of factory shipping as determined by the serial number establishes the labor warranty period should service be required. If service is performed, it is in your best interest to obtain and keep all receipts. This written warranty gives you specific legal rights. You may also have other rights that vary from state to state. Service under this warranty must be obtained by following these steps, in order:

1. Contact your selling authorized XTERRA Fitness dealer. OR
2. Contact your local authorized XTERRA Fitness service organization.
3. If there is a question as to where to obtain service, contact our service department at (870) 935-1107.
4. XTERRA Fitness' obligation under this warranty is limited to repairing or replacing, at XTERRA Fitness' option, the product through one of our authorized service centers. All repairs must be preauthorized by XTERRA Fitness. If the product is shipped to a service center freight charges to and from the service center will be the customer's responsibility. For replacement parts shipped while the product is under warranty, the customer will be responsible for shipping and handling charges. For in-home service, the customer will be responsible for a trip charge. There will be an additional trip charge if the customer is located over 100 miles from the nearest service center.
5. The owner is responsible for adequate packaging upon return to XTERRA Fitness. XTERRA Fitness is not responsible for damages in shipping. Make all freight damage claims with the appropriate freight carrier. DO NOT SHIP ANY UNIT TO OUR FACTORY WITHOUT A RETURN AUTHORIZATION NUMBER. All units arriving without a return authorization number will be refused.

For any further information, or to contact our service department by mail, send your correspondence to:

XTERRA Fitness, Inc.

P.O. Box 2037

Jonesboro, AR 72402-2037

Product features or specifications as described or illustrated are subject to change without notice. All warranties are made by XTERRA Fitness, Inc. This warranty applies only in the 48 contiguous United States. NOTE: This does not apply to Alaska or Hawaii.

3000 Nestle Road Jonesboro, AR 72401 | Phone: 800-258-8511 | Fax: 870-935-7611

©2026 All Rights Reserved. SB600 Owner's Manual