XTERRA FITNESS

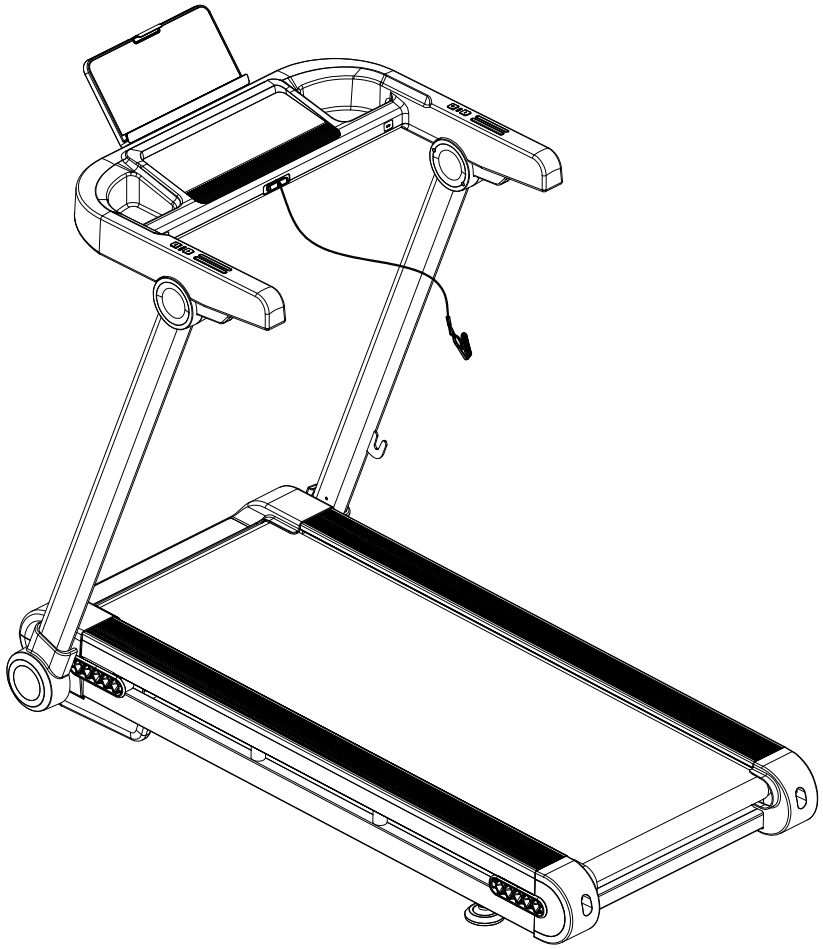

TF100 TREADMILL

TF100_OwnersManual_110816_20260901

Online Support

If you require assistance or are experiencing issues with your XTERRA Machine, please contact customer care for additional help.

1-(870) 336-4286

questions@xterrafitness.com

Warranty Registration

Scan to quickly and easily register your new XTERRA Fitness machine.

Table of Contents

Product Registration 3

Warning / Safety Instructions

Product Labels 4

Safety Instructions 5

Electrical Safety 6

Grounding & Location Requirements 7

Parts & Assembly

Parts of your treadmill 9

Pack List 10

Assembly 11

Moving your treadmill 17

Storing your treadmill 18

Technology and Features

Safety stop key 20

About Your Machine 21

Console Screen - Overview 22

Operation Guide 23

Program Settings 24

Functions 26

Using the XF Connect App 27

Heart Rate Exertion 28

Maintenance

Maintenance & Care 30

Deck Lubrication 32

Exploded View Diagram 34

Warranty 36

Troubleshooting 39

PRODUCT REGISTRATION

Congratulations on your new treadmill, and welcome to the XTERRA Fitness family!

Thank you for your purchase of this quality unit from XTERRA Fitness. Your new unit was manufactured by one of the leading fitness manufacturers in the world and is backed by one of the most comprehensive warranties available. XTERRA Fitness will do all we can to make your ownership experience as pleasant as possible for many years to come.

If you have questions, or if parts are missing or damaged, or you require customer service, call (870) 336-4286. Please have your model number and serial number handy when you call.

Please take a moment at this time to record the name of the dealer, their telephone number, and the date of purchase below to make any future, needed contact easy. We appreciate your support and we will always remember that you are the reason that we are in business.

Serial Number	
Date of Purchase	
Dealer / Place of Purchase	

WARRANTY REGISTRATION

Use your smartphone to scan the QR code above to quickly and easily register your new XTERRA Fitness machine.

You can also go to **xterrafitness.com/warranty** under the Support tab to register online.

Version: 1.0
Revision: 09/01/26

PRODUCT LABELS

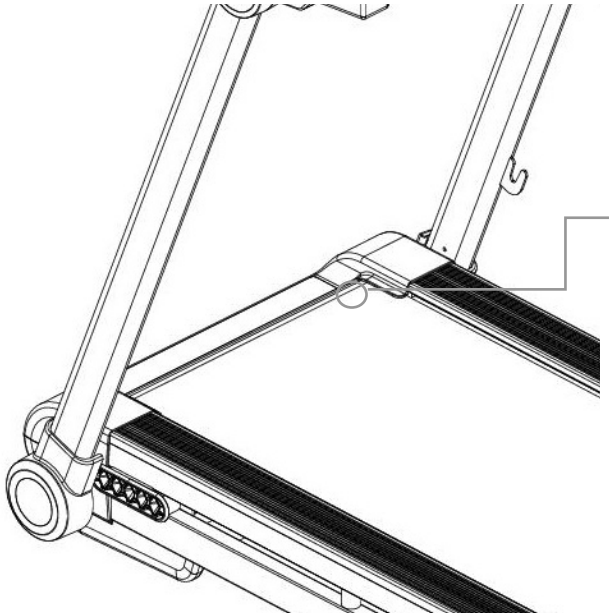

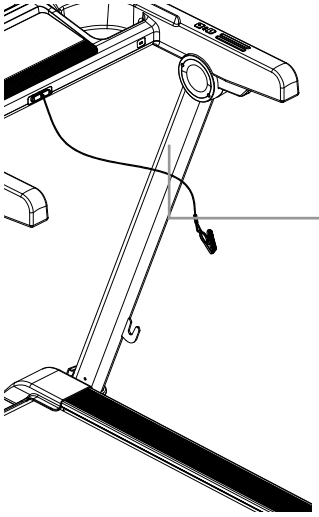



SERIAL NUMBER STICKER

This sticker will be found on the rear of the motor cover. Please record the number below the barcode for the purpose of registering your treadmill's warranty.



PROPOSITION 65 WARNING

This sticker will be found on the rear of the motor cover. The State of California requires us to inform you that this unit was manufactured using chemicals that could cause harm with improper use.

SAFETY WARNING STICKER

This sticker will be found on the interior side of your treadmill's upright. The same warning can be found in this manual. Please read and be aware of the precautions before operating your unit.

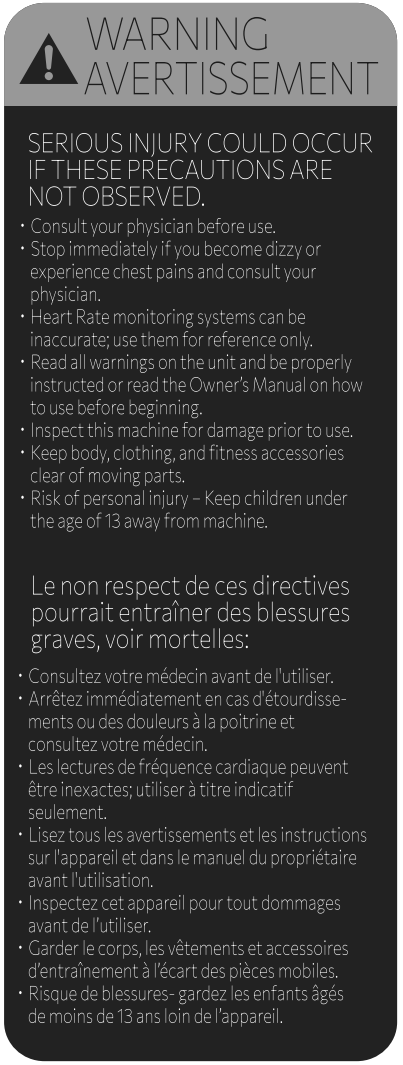

SAFETY INSTRUCTIONS

When using an electrical appliance, basic precautions should always be followed, including the following. Read all instructions before using this appliance.

DANGER - To reduce the risk of electric shock:
Always unplug this appliance from the electrical outlet immediately after using and before cleaning.

WARNING - To reduce the risk of burns, fire electric shock, or injury to persons:

DO NOT USE AN EXTENSION CORD: DO NOT ATTEMPT TO DISABLE THE GROUNDED PLUG BY USING IMPROPER ADAPTERS OR IN ANY WAY MODIFY THE CORD SET.

1. Install the treadmill on a flat level surface with access to correct voltage and frequency, grounded outlet.
2. Do not operate treadmill on deeply padded, plush or shag carpet. Damage to both carpet and treadmill may result.
3. Do not block the rear of the treadmill. Provide a minimum of 3ft clearance between the rear of the treadmill and any fixed object.
4. Place your unit on a solid, level surface when in use.
5. Never allow children on or near the treadmill.
6. When running, make sure the plastic clip is fastened on your clothing. It is for your safety, should you fall or move too far back on the treadmill.
7. Keep hands away from all moving parts.
8. Never operate the treadmill if it has a damaged cord or plug.
9. Keep the cord away from heated surfaces.
10. Do not operate where aerosol spray products are being used or where oxygen is being administered. Sparks from the motor may ignite a highly flammable environment.
11. Never drop or insert any object into any openings.
12. The treadmill is intended for in-home use only and not suitable for long time running.
13. To disconnect, turn all controls to the off position, remove the safety key, and then remove the plug from the outlet.
14. The pulse sensors are not medical devices. Various factors, including the user's movement, may affect the accuracy of heart rate readings. The pulse sensors are intended only as exercise aids in determining heart rate trends in general.
15. Use handrails provided; they are for your safety.
16. Wear proper shoes. High heels, dress shoes, sandals or bare feet are not suitable for use on your treadmill. Quality athletic shoes are recommended to avoid leg fatigue.
17. Allowed temperature: 40F to 104F degrees.
18. **User Weight Limit: 265 lbs.**

Please ensure that you review and adhere to the user weight restrictions and power requirements of your new machine. Failure to do so may result in serious injury or damage to your machine.

IMPORTANT OPERATION INSTRUCTIONS

1. An appliance should never be left unattended when plugged in. Unplug from outlet when not in use, and before putting on or taking off parts.
2. Do not operate under blanket or pillow. Excessive heating can occur and cause fire, electric shock, or injury to persons.
3. This exercise equipment is not intended for use by persons with reduced physical, sensory or mental capabilities, or lack of experience and knowledge.
4. Use this appliance only for its intended use as described in this manual. Do not use attachments not recommended by the manufacturer.
5. Never operate this appliance if it has a damaged cord or plug, if it is not working properly, if it has been dropped or damaged, or dropped into water. Return the appliance to a service center for examination and repair.
6. Do not carry this appliance by supply cord or use cord as a handle.
7. Keep the cord away from heated surfaces.
8. Never operate the appliance with the air openings blocked. Keep the air openings free of lint, hair, and the like.
9. Never drop or insert any object into any opening.
10. Do not use outdoors.
11. Do not operate where aerosol (spray) products are being use or where oxygen is being administered.
12. Connect this appliance to a properly grounded outlet only. See Grounding Instructions.
13. The appliance is intended for household use.
14. To disconnect, turn all controls to the off position, then remove the plug from the outlet.
15. Do not operate equipment on deeply padded, plush or shag carpet. Damage to both carpet and equipment may result.
16. Before beginning this or any exercise program, consult a physician. This is especially important for persons over the age of 35 or persons with pre-existing health conditions.
17. Keep hands away from all moving parts.
18. The pulse sensors are not medical devices. Various factors, including the user's movement, may affect the accuracy of heart rate readings. The pulse sensors are intended only as exercise aids in determining heart rate trends in general.
19. Do not attempt to use your equipment for any purpose other than for the purpose it is intended.
20. Do not operate tablet or laptop when you are running, walking or climbing at high speed.
21. Wear proper shoes. High heels, dress shoes, sandals or bare feet are not suitable for use on your equipment. Quality athletic shoes are recommended to avoid leg fatigue.

ELECTRICAL SAFETY

WARNING!

Route the power cord away from any moving part of the unit including the elevation mechanism and transport wheels.

NEVER remove any cover without first disconnecting AC power. If voltage varies by ten percent (10%) or more, the performance of your unit may be affected. **Such conditions are not covered under your warranty.** If you suspect the voltage is low, contact your local power company or a licensed electrician for proper testing.

NEVER expose this unit to rain or moisture. This product is **NOT** designed for use outdoors, near a pool or spa, or in any other high humidity environment. The temperature specification is 40 degrees C, and humidity is 95%, non-condensing (no water drops forming on surfaces).

Circuit breakers: Avoid AFCI/GFCI circuit breakers if possible. These breakers may trip occasionally during exercise because of the high inrush currents of the unit drive electronics and motor. This is an issue that affects all unit brands. New laws in your area may require these breakers. If you do have these breakers and outlets in your home, and are experiencing nuisance tripping, you should check if there are any other devices plugged into the same circuit. Some examples of devices that may also cause tripping are fluorescent lights with electronic ballasts, coffee maker, space heater, hair drier.

Optimally the unit should be the only device plugged into the circuit. Our units have surge suppressors built in to help avoid nuisance tripping. We have tested several AFCI/GFCI breakers and outlets with our products. Brands we have tested are: Eaton (Cutler Hammer Series), Leviton (Smart lock pro) and Schneider Electric (Canadian home series). These breakers do not trip in our testing, when connected to our units, as long as no other devices are plugged into the same circuit.

- **NEVER** operate this unit without reading and completely understanding the results of any operational change you request from the computer.
- **NEVER** use a ground fault circuit interrupt (GFCI) wall outlet with this treadmill. Route the power cord away from any moving part of the treadmill including the elevation mechanism and transport wheels.
- **NEVER** operate treadmill on Generator or UPS power supply.
- **NEVER** remove any cover without first disconnecting AC power.
- **NEVER** expose this treadmill to rain or moisture. This treadmill is not designed for use outdoors, near a pool, or in any other high humidity environment.
- Understand that changes in speed and incline do not occur immediately. Set your desired work level on the computer console and release the adjustment key. The computer will obey the command gradually.
- **NEVER** use your unit during an electrical storm. Surges may occur in your household power supply that could damage unit components. Unplug the unit during an electrical storm as a precaution.
- Use caution while participating in other activities while walking on your unit; such as watching television, reading, etc. These distractions may cause you to lose balance which may result in serious injury.
- Do not use excessive pressure on console control keys. They are precision set to function properly with little finger pressure.

GROUNDING & LOCATION REQUIREMENTS

This product must be grounded. If the unit should malfunction or breakdown, grounding provides a path of least resistance for electric current, reducing the risk of electric shock. This product is equipped with a cord having an equipment-grounding plug. The plug must be plugged into an appropriate outlet that is properly installed and grounded in accordance with all local codes and ordinances.

DANGER - Improper connection of the equipment-grounding conductor can result in a risk of electric shock. Check with a qualified electrician or serviceman if you are in doubt as to whether the product is properly grounded. Do not modify the plug provided with the product if it will not fit the outlet; have a proper outlet installed by a qualified electrician.

This product is for use on a nominal 120-volt circuit, and has a grounding plug that looks like the plug illustrated below. A temporary adapter that looks like the adapter illustrated below may be used to connect this plug to a 2-pole receptacle as shown below if a properly grounded outlet is not available. The temporary adapter should be used only until a properly grounded outlet, (shown below) can be installed by a qualified electrician. The green colored rigid ear-lug, or the like, extending from the adapter, must be connected to a permanent ground such as a properly grounded outlet box cover. Whenever the adapter is used, it must be held in place by a metal screw.

Location Requirements

After assembling your treadmill, you'll need to make sure you've installed it in a safe area.

- We recommend that you leave an area of at least 20in on the front, and sides of your machine. The front of the unit is where the motor is located.
- We recommend that you leave an area of at least 6ft behind the treadmill.
- Install your treadmill in an area where children and pets cannot access it.
- Always keep the area around your treadmill clear of furniture, exercise equipment and other debris.
- Do not install your treadmill on deeply padded, plush, or shag carpet.

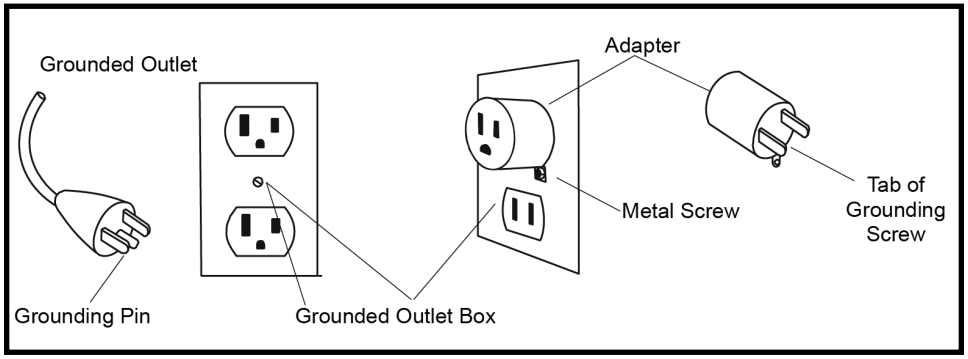

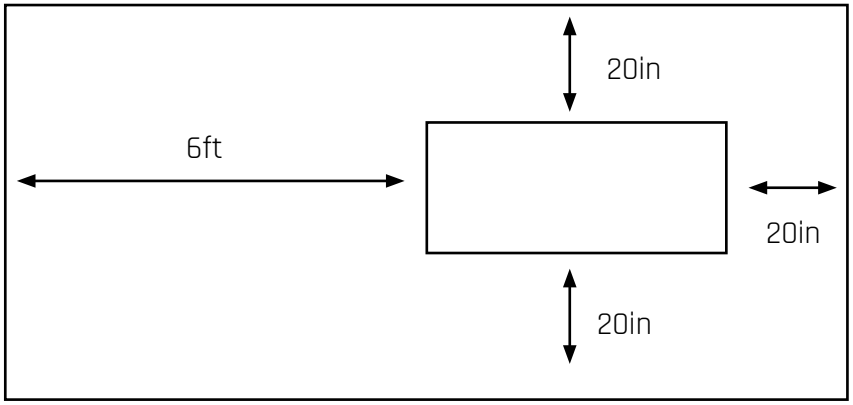

PARTS OF YOUR TREADILL

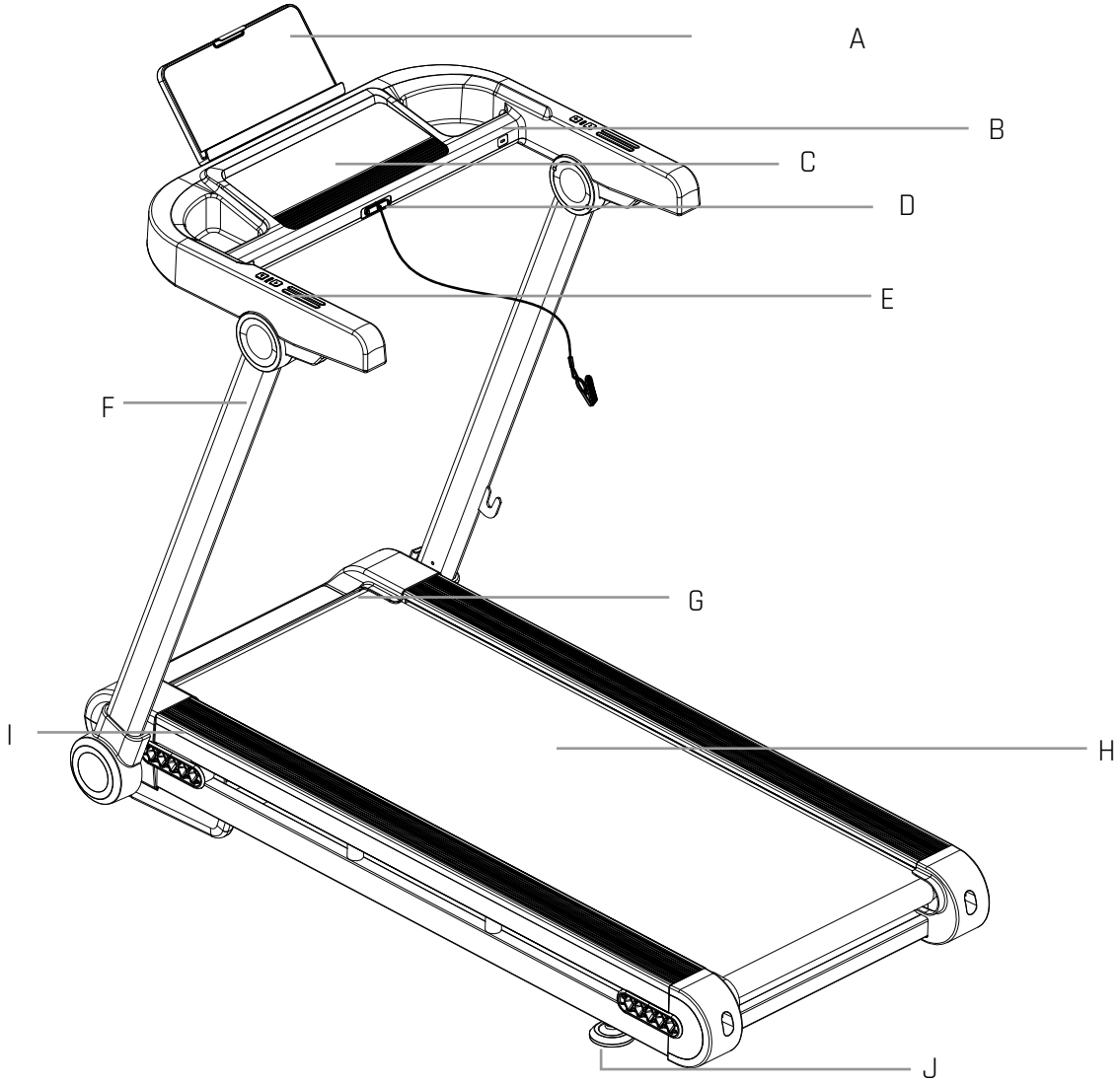

A. Tablet Holder
B. USB Type A & C Charger Port*
C. LED Screen
D. Safety stop key
E. Hand pulse sensors
F. Uprights
G. Motor cover
H. Belt
I. Side rails
J. Levelers

* USB A and C ports are for charging purposes only; USB is 5V / 1A.

PACK LIST

No	Description	Quantity
A	Main frame	1
B	Ipad Holder	1
C	Lubrication oil	1
C19	Upright tube cover	2
C32	Safety key	1
E01	Power cord	1
B15	Allen Wrench	1

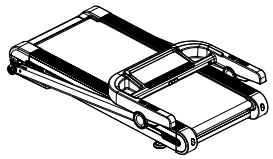

A



B



C

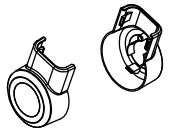

C19



C32



E01

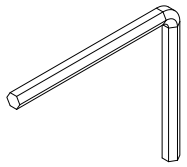

B15

ASSEMBLY

1. Take out the treadmill from the carton and lay it aside on the smooth ground.

B–1

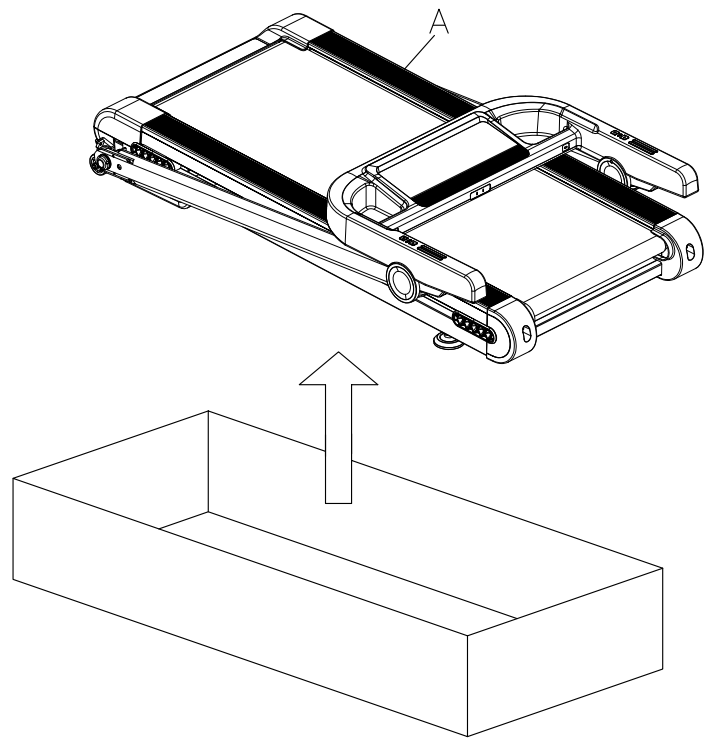

ASSEMBLY - 2 - CONTINUED

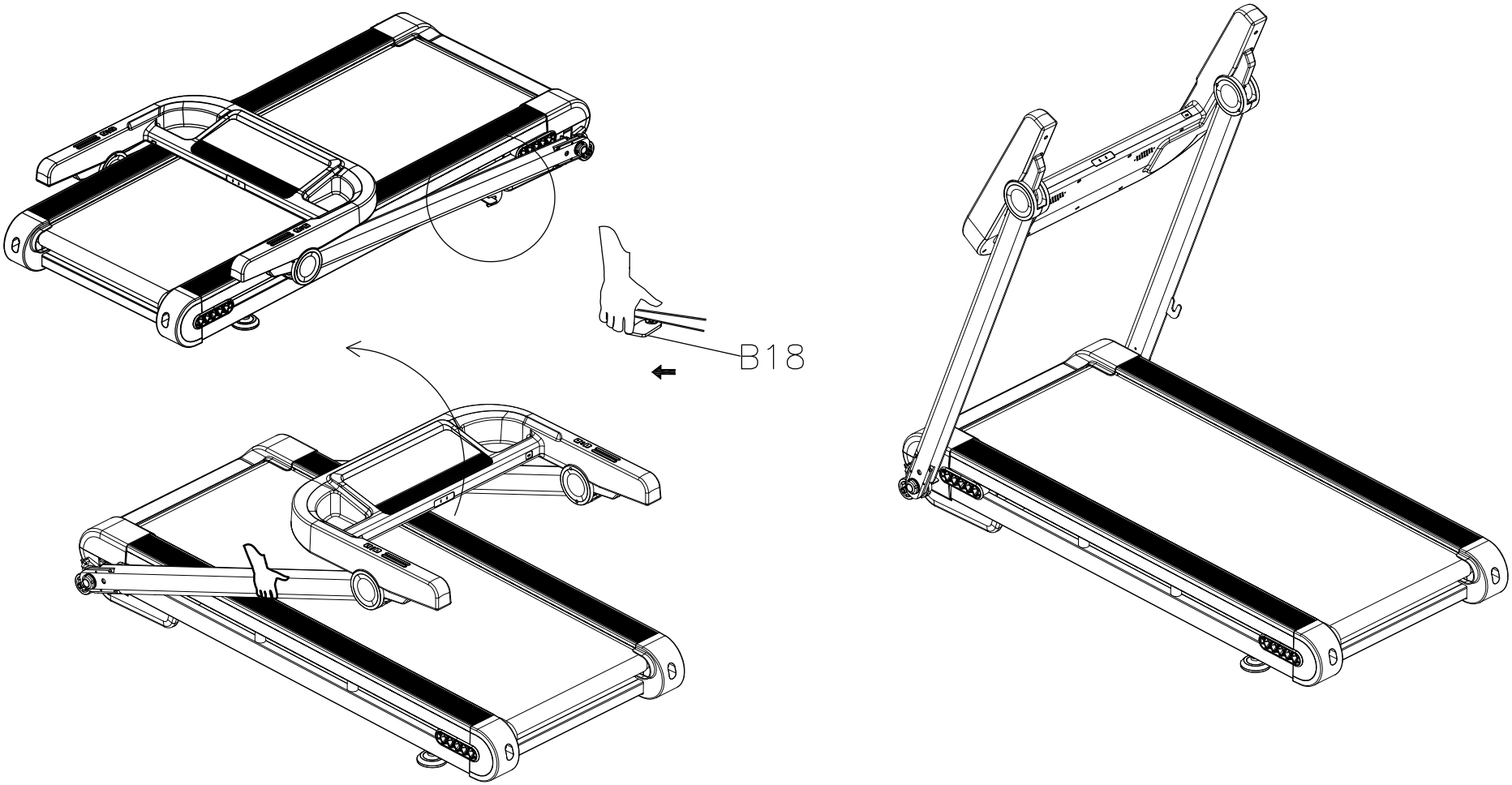

ASSEMBLY - 3 - CONTINUED

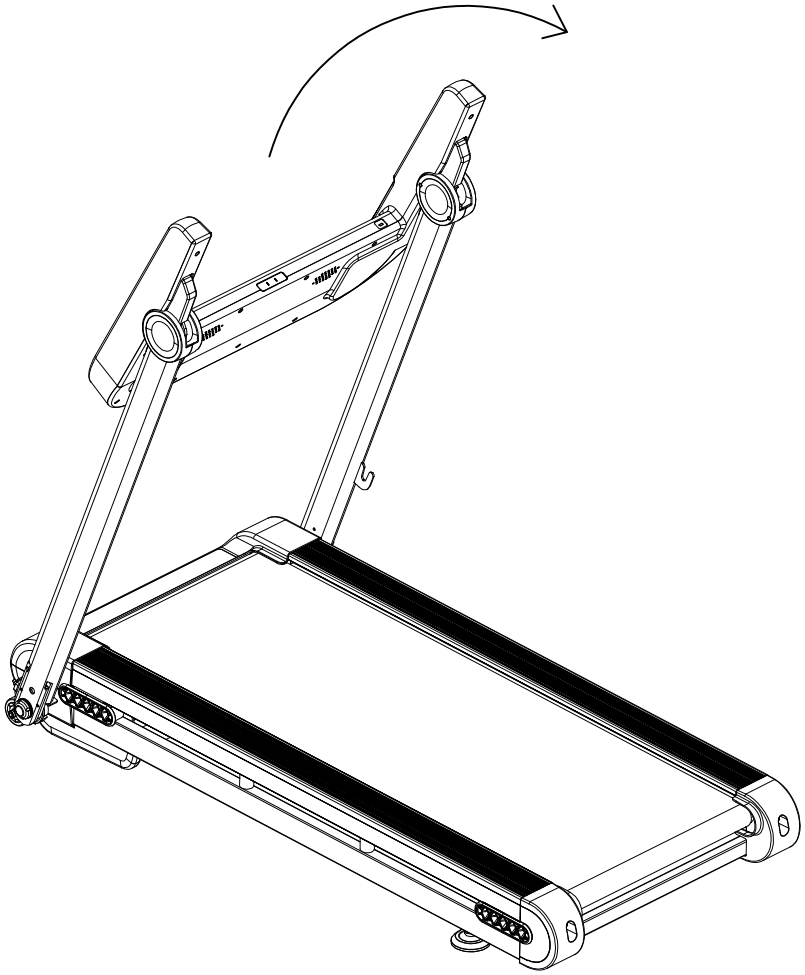



ASSEMBLY - 4 - CONTINUED

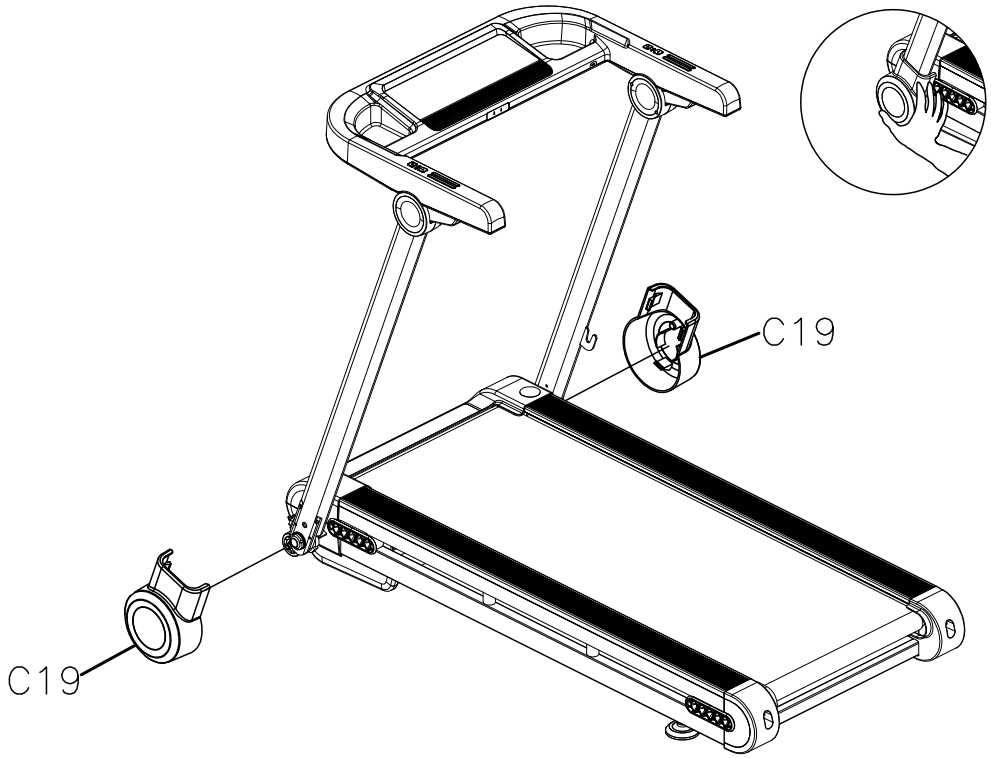

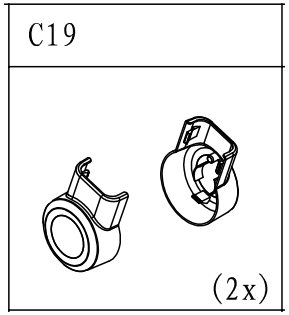

ASSEMBLY - 5 - CONTINUED

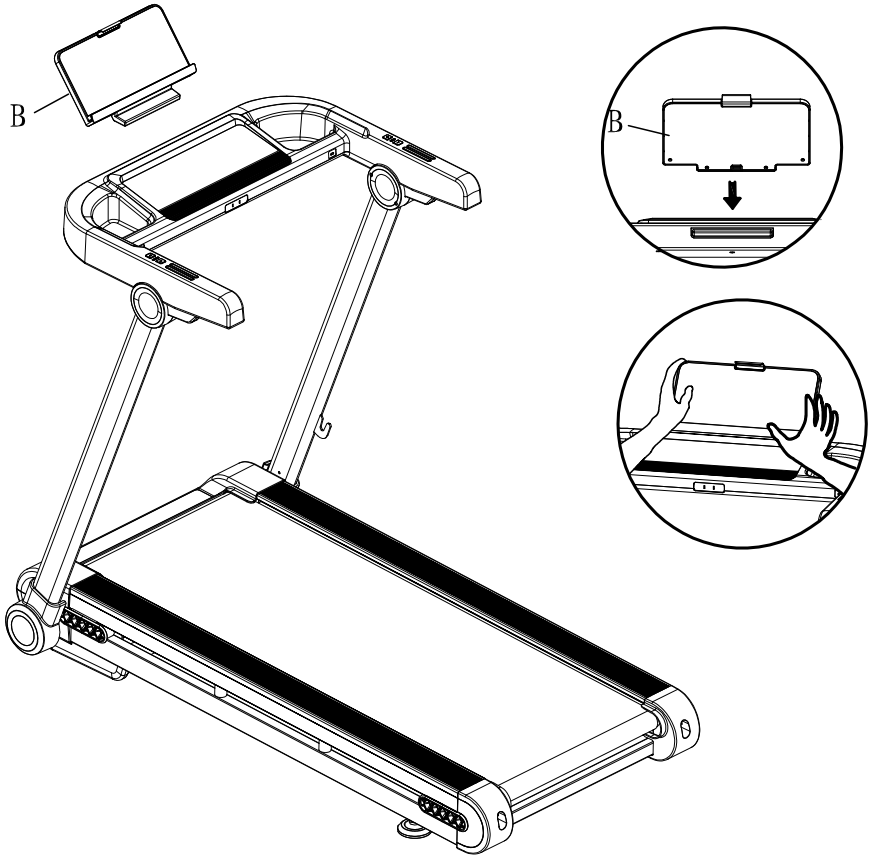

B
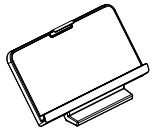 (1x)

ASSEMBLY - 6 - CONTINUED

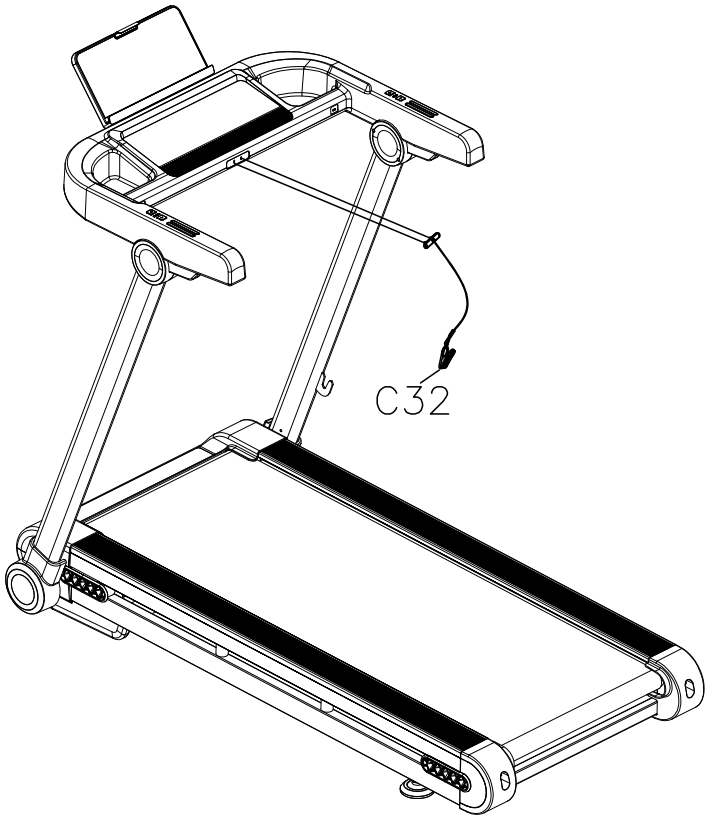

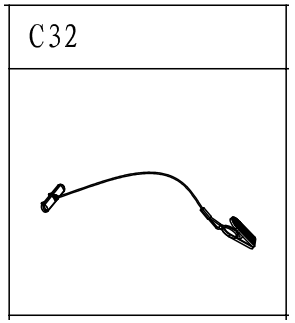

IMPORTANT: You will need to lubricate your treadmill before the first use. Please see pages 32-33 for lubrication instructions.

MOVING YOUR TREADMILL

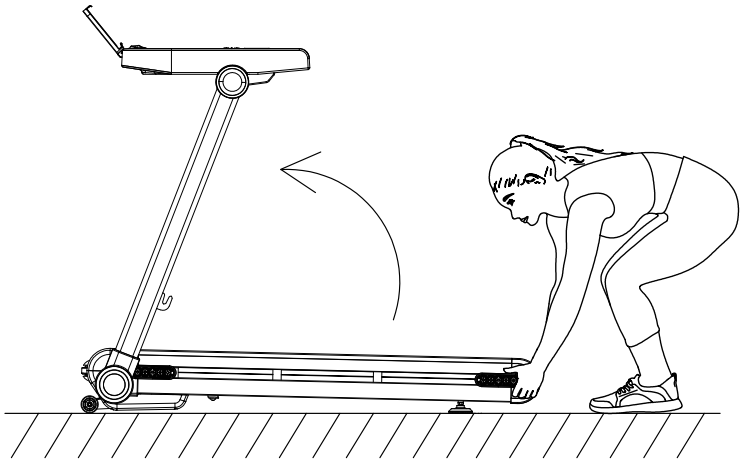

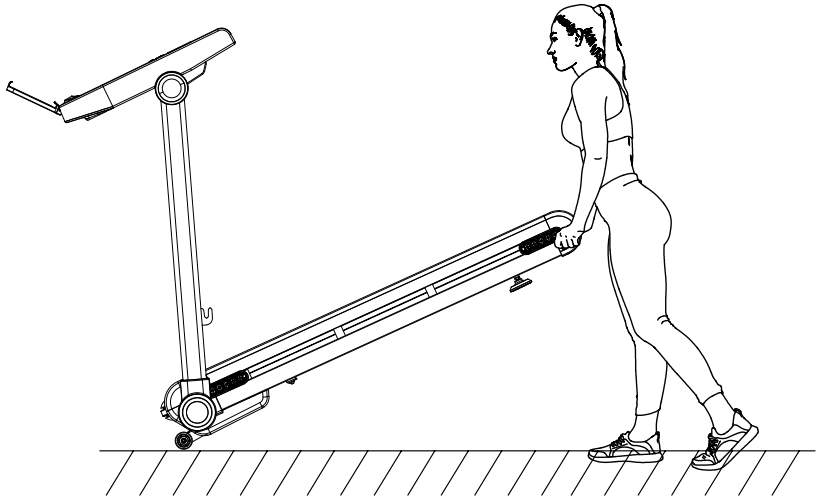

STORING YOUR TREADMILL

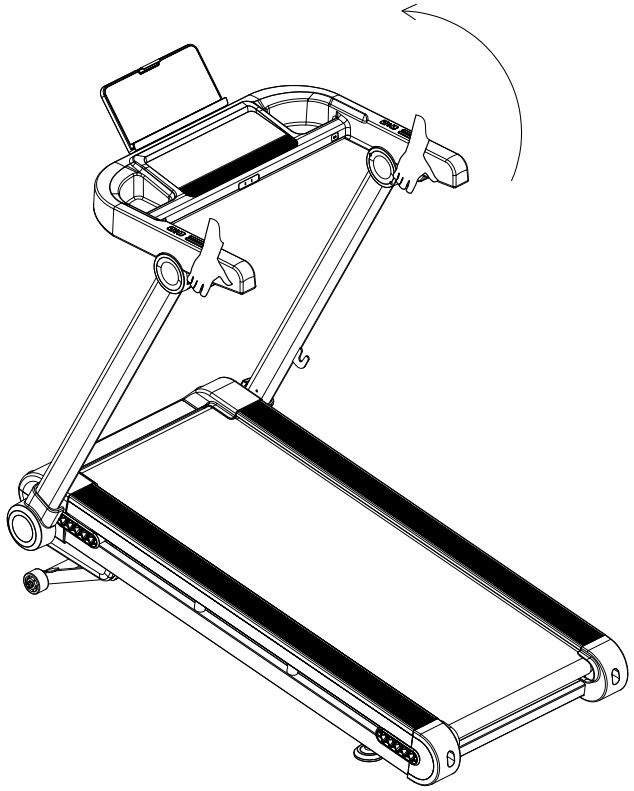

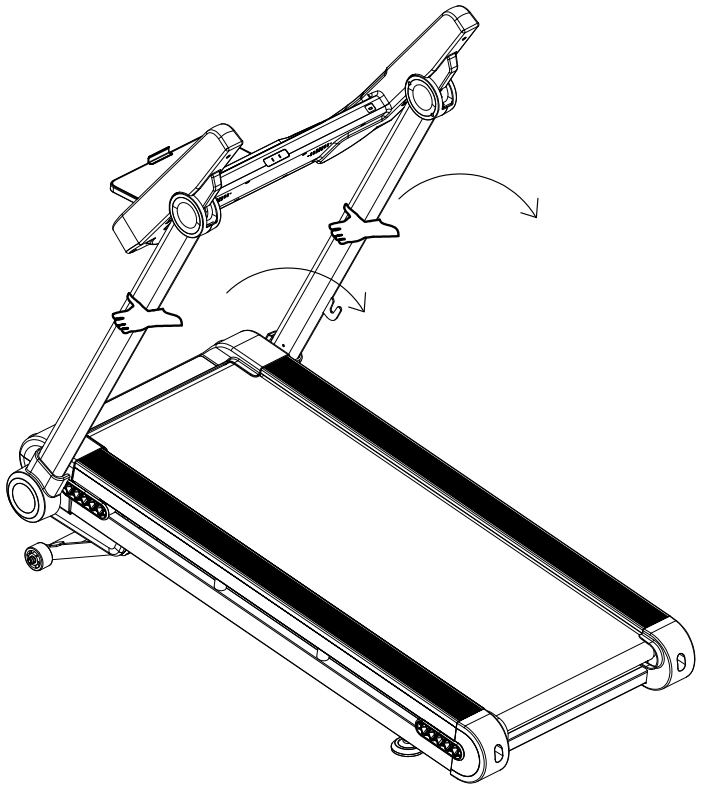

STORING YOUR TREADMILL

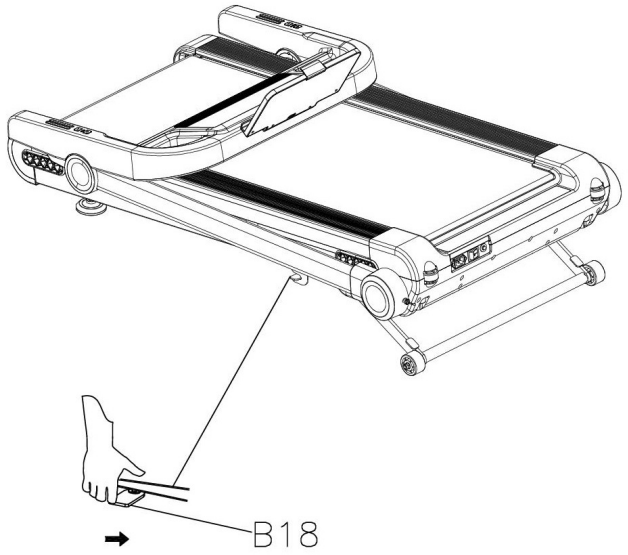

SAFETY STOP KEY

A safety tether cord is provided with this unit.
It is a simple magnetic design that should be used at all times.
It is for your safety should you fall or move too far back on the tread-belt.
Pulling this safety tether cord will stop tread-belt movement.

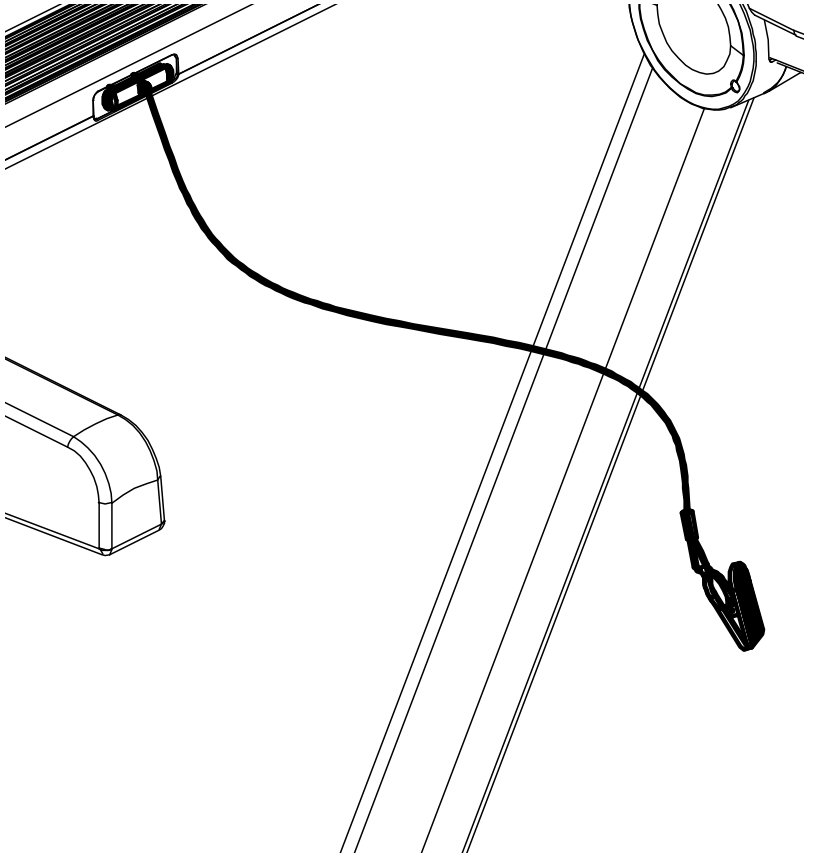

To Use:

1. Place the magnet into position on the round metal portion of the console control head. Your unit will not start and operate without this. Removing the magnet also secures the unit from unauthorized use.
2. Fasten the plastic clip onto your clothing securely to ensure good holding power. Note: The magnet has strong enough power to minimize accidental, unexpected stopping. The clip should be attached securely to make certain it does not come off. Be familiar with its function and limitations. The unit will stop, depending on speed, with a one to two step coast anytime the magnet is pulled off the console. Use the Stop / Pause switch in normal operation.

ABOUT YOUR MACHINE

Always use care and caution when operating your machine. Follow instruction in this manual to ensure safe operation and maintenance of your treadmill

Your new XTERRA Fitness treadmill has Bluetooth connectivity to give you access to the most advanced workout experiences available. Follow the instructions on page 27 to learn more about using the Bluetooth capabilities to their fullest potential.

Downloading the XF Connect app will help unlock more features - such as tracking workouts and sharing data via Google Fit and Apple Fitness. Simply search for "XF Connect" in the app store on your smartphone or tablet, or scan the QR code on the right



The XF Connect app is available on Google Play and the Apple App Store. Scan the QR Code below, and quickly and easily sign up to start taking your workout experience to a whole new level.

Available on the App Store

GET IT ON Google play

Be sure to follow XTERRA Fitness on your favorite social media platforms to view and share the latest fitness videos, images, and news.

facebook.com/XterraFitness

www.instagram.com/XterraFitness

youtube.com/user/XterraFitnessOnline

CONSOLE SCREEN - OVERVIEW

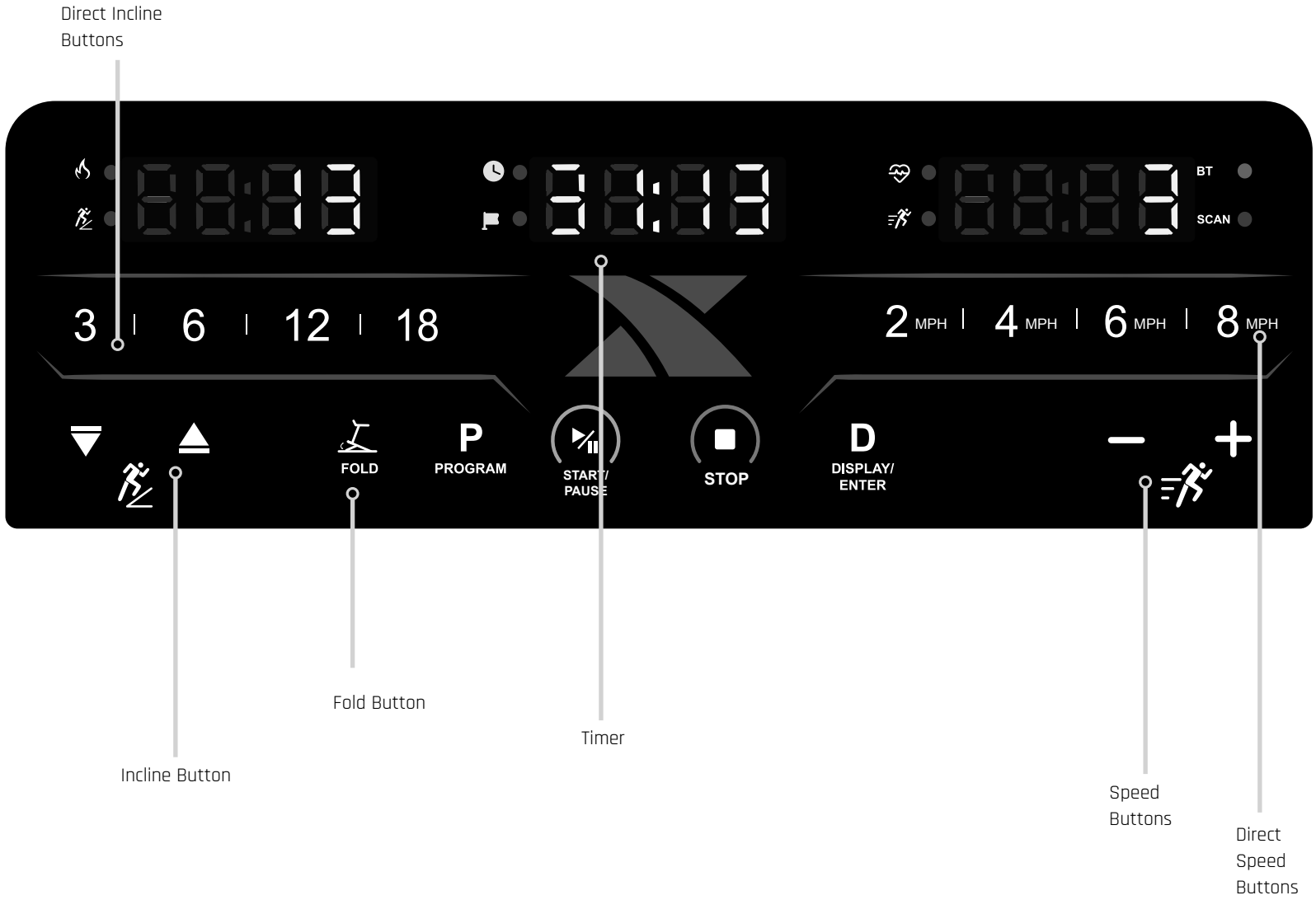

OPERATION GUIDE

Button Functions

1. **INSTANT INCLINE:** Press 3-6-12-18 to choose incline quickly.
2. **INCLINE+/-:** Press this button to adjust the incline.
3. **FOLD**: Before vertical folding, please press FOLD button under standby/stop mode, the incline will go to the maximum for folding stability.
4. **START/PAUSE**: Press this button to start or pause the treadmill.
5. **STOP**: Press this button to stop the treadmill.
6. **Display/Enter:** Press this button to choose between time, distance, and calories workout targets.
7. **Program**.: Press this button to choose between 15 programs.
8. **INSTANT SPEED**: Press 2-4-6-8 MPH to choose speed quickly.
9. **SPEED+/-**: Press this button to adjust the speed.

Computer Functions

1. INC./TIME/CAL.: Displays the time run, calories consumed and current incline. Press INCLINE+/- to adjust the incline of the machine.
2. SPEED/DIST./PULSE: Displays current speed, the distance run and user's heart rate. Press SPEED+/- to adjust the speed of the machine. The user's heart rate data is for reference only and not for medical purposes. Hold the hand pulse sensor with both hands, the console will show user's pulse value after about 5 seconds.
3. Display/Enter: Press this button to choose between time, distance, calories countdown mode.

- From standby mode, press M button, the corresponding light of TIME, DISTANCE, CALORIES will come on, select between TIME, DISTANCE, CALORIES.

-Press SPEED+/- or INCLINE+/- to set the workout target value.

-Press START button, treadmill will run after 3 seconds.

-Press SPEED+/- to adjust the speed.

-Press INCLINE+/- to adjust the incline.

4. PROG: Press this button to choose between 15 programs.
5. Set of 15 built-in programs: From standby mode, press P button, console will show 15 programs, select between 15 programs.

-Press SPEED+/- or INCLINE+/- to set the time.

-Press START button, treadmill will run after 3 seconds.

-Each program can be divided into 10 sections; machine will beep 3 times when starting a new section.

-Press SPEED+/- or INCLINE+/- to change the speed and incline during each section.

-Machine will beep 3 times and stop when the program is finished.

PROGRAM SETTINGS

		Set time / 10 = running time for each segment									
		1	2	3	4	5	6	7	8	9	10
P1	SPEED	1.2	2.5	1.8	2.5	1.8	3.1	2.5	1.2	3.1	1.8
	INCLINE	1	2	3	3	1	2	2	3	2	2
P2	SPEED	1.2	3.7	4.3	5	1.8	3.7	5	4.3	3.1	1.2
	INCLINE	1	2	3	3	2	2	3	4	2	2
P3	SPEED	1.8	5	1.8	5	3.1	5.6	3.1	5.6	7.5	3.7
	INCLINE	1	3	5	7	9	10	8	6	5	2
P4	SPEED	5	6.2	6.8	7.5	7.5	6.8	6.2	6.2	5.6	5
	INCLINE	1	2	2	3	1	2	2	2	2	1
P5	SPEED	3.7	6.2	7.5	5.6	6.8	5	7.5	4.3	5.6	1.8
	INCLINE	1	2	4	3	2	2	4	5	2	1
P6	SPEED	1.2	5	3.7	6.2	6.2	5.6	6.8	5	3.1	1.8
	INCLINE	2	2	3	2	3	4	5	6	5	3
P7	SPEED	1.2	3.7	4.3	5.6	4.3	5.6	3.7	3.1	2.5	1.2
	INCLINE	4	5	6	6	9	9	10	12	6	3
P8	SPEED	1.2	2.5	3.7	5	4.3	5	5.6	3.7	2.5	1.2
	INCLINE	3	5	4	4	3	4	4	3	3	2
P9	SPEED	1.2	2.5	3.1	4.3	3.7	3.1	5	3.7	1.8	1.2
	INCLINE	3	5	3	4	2	3	4	2	3	2
P10	SPEED	1.2	1.8	3.1	1.8	1.8	3.1	1.8	3.7	1.8	1.8
	INCLINE	4	4	3	6	7	8	8	6	3	3

PROGRAM SETTINGS

Program	Parameter	1	2	3	4	5	6	7	8	9	10
P11	SPEED	1.2	3.1	5	6.2	3.7	5.6	3.1	1.8	1.2	1.2
	INCLINE	1	3	5	8	10	7	6	3	2	3
P12	SPEED	1.2	3.1	3.1	2.5	2.5	3.7	2.5	1.2	1.8	2.5
	INCLINE	3	5	6	7	12	9	11	11	6	3
P13	SPEED	1.2	4.3	2.5	4.3	5	5.6	2.5	3.1	1.8	1.2
	INCLINE	5	6	6	4	6	5	8	9	4	2
P14	SPEED	1.2	3.7	3.1	2.5	5	3.7	3.1	1.2	1.8	1.8
	INCLINE	5	6	5	8	4	5	5	10	6	3
P15	SPEED	1.2	3.7	3.1	2.5	5	4.3	3.1	1.8	1.8	1.2
	INCLINE	3	4	5	6	3	5	5	6	4	3

FUNCTIONS

Safety Lock Function

Under any mode, if you pull away the safety key, the machine will stop. The window will show "---" with reminding sound. The machine cannot work until safety key is inserted back.

Power Save Function

The machine is equipped with an energy saving function. In Standby Mode, if operation is not detected for 10 minutes, the display will turn off. Press any button to turn the display back on.

Power On / Power Off

Switch off the power: You can switch off the power to stop the treadmill, which won't be damaged at any time.

USING THE XF CONNECT APP

In order to help you achieve your exercise goals, your new exercise machine comes equipped with a Bluetooth® transceiver that will allow it to interact with selected phones or tablet computers via the XF Connect App. Just download the free XF Connect App from the Apple Store or Google Play, and then follow the instructions in the App to sync with your exercise machine.

Press the "DISPLAY" button from the APP to view the display of the current workout data. When your exercise is complete, choose "END & SAVE WORKOUT" to store the workout data.

1. Download the App by scanning the QR code on the right.
2. Open the App on your device (phone or tablet) and make sure Bluetooth® is enabled on your device (phone or tablet).
3. In the App click the Bluetooth® icon to search for your XF Connect equipment.
4. Under the Bluetooth® scan result list, select the machine for connect. When the App and equipment are synced, the Bluetooth® icon on the equipment's console display will light up. Click "DISPLAY", you may now start using your XF Connect App.
5. When your exercise is complete, choose "END & SAVE WORKOUT" to store the workout data. You will be prompted to sync your data with each available fitness cloud site. Please note, you will have to download the applicable compatible fitness App, such as Strava, MapMyFitness, Fitbit, etc., in order for the icon to be active and available.

Note: Your device will need to be running on a minimum operating system of IOS 13.1 or Android 8.0 for the XF Connect App to operate properly.



HEART RATE EXERTION

The old motto, “no pain, no gain”, is a myth that has been overpowered by the benefits of exercising comfortably. A great deal of this success has been promoted by the use of heart rate monitors. With the proper use of a heart rate monitor, many people find that their usual choice of exercise intensity was either too high or too low and exercise is much more enjoyable by maintaining their heart rate in the desired benefit range.

To determine the benefit range in which you wish to train, you must first determine your Maximum Heart Rate. This can be accomplished by using the following formula: 220 minus your age. This will give you the Maximum Heart Rate (MHR)for someone of your age. To determine the effective heart rate range for specific goals you simply calculate a percentage of your MHR. Your Heart rate training zone is 50% to 90% of your maximum heart rate. 60% of your MHR is the recommended for burning fat while 80% is recommended for strengthening the cardio vascular system. This 60% to 80% is the zone to stay in for maximum benefit.

For someone who is 40 years old their target heart rate zone is calculated:
220 – 40 = 180 (maximum heart rate)
180 x .6 = 108 beats per minute (60% of maximum)
180 X .8 = 144 beats per minute (80% of maximum)
So for a 40 year old the training zone would be 108 to 144 beats per minute.

If you enter your age during programming the console will perform this calculation automatically. Entering your age is used for the Heart Rate programs. After calculating your MHR you can decide upon which goal you would like to pursue.

The two most popular reasons for, or goals, of exercise are cardiovascular fitness (training for the heart and lungs) and weight control. If your goal is cardiovascular fitness or if it is weight loss, it can be achieved by training at 80% or 60%, respectively, of your MHR on a schedule approved by your physician. Consult your physician before participating in any exercise program.

With this Spirit Fitness unit you may use the heart rate monitor feature without using the Heart Rate program. However, when using the heart rate monitor feature in conjunction with the Heart Rate programs, the machine will automatically adjust speed or incline to maintain the desired heart rate.

HEART RATE - PERCEIVED EXERTION

Heart rate is important but listening to your body also has a lot of advantages. There are more variables involved in how hard you should workout than just heart rate. Your stress level, physical health, emotional health, temperature, humidity, the time of day, the last time you ate and what you ate all contribute to the intensity at which you should workout. If you listen to your body it will tell you all of these things.

The rate of perceived exertion (RPE), also known as the Borg scale, was developed by Swedish physiologist G.A.V. Borg.
This scale rates exercise intensity from 6 to 20 depending upon how you feel or the perception of your effort.
The scale is as follows:

Rating Perception of Effort	
6	Minimal
7	Very, Very Light
8	Very, Very Light +
9	Very Light
10	Very Light +
11	Fairly Light
12	Comfortable
13	Somewhat Hard
14	Somewhat Hard +
15	Hard
16	Hard +
17	Very Hard
18	Very Hard +
19	Very, Very Hard
20	Maximal

You can get an approximate heart rate level for each rating by simply adding a zero to each rating. For example a rating of 12 will result in an approximate heart rate of 120 beats per minute. Your RPE will vary depending on the factors discussed earlier. If your body is strong and rested, you will feel strong and your pace will feel comfortable. When your body is in this condition, you are able to train harder and the RPE will support this. If you are feeling tired and sluggish, it is because your body needs a break. In this
condition, your pace will feel difficult. Again, this will show up in your RPE and you will train at the proper level for that day.

MAINTENANCE & CARE

Post-Workout Machine Care

1. Store your machine according to the folding instructions when not in use.
2. Use a slightly damp cloth to clean areas where sweat or oil made contact with the machine.
3. Use a microfiber cloth to clean the display and remove unwanted oils and other things that may damage the screen.
4. Avoid leaving paper or other small debris in the cupholders.

General Cleaning

Dirt, dust, and hair can block air inlets and accumulate on the running belt. Please vacuum underneath your unit on a monthly basis to prevent excess build-up of dirt that can get sucked up and get into the inner workings under the motor cover. Every other month, you should remove the motor cover and carefully vacuum out dirt and hair that may accumulate.

UNPLUG THE POWER CORD BEFORE THIS TASK.

Sanitizing Your XTERRA Fitness Equipment

- Unupholstered high-contact surfaces (hard plastics) can be sanitized using a 75% isopropyl alcohol solution and a clean, dry cloth. Spray surfaces to be sanitized, and use the dry cloth to wipe clean. Allow surfaces to dry before using.
- For upholstered or soft-plastic surfaces, use a conditioner after sanitizing. Be sure to follow the instructions provided by the conditioner manufacturer to ensure proper use of the conditioner.
- Alternatively, you can make your own spray by mixing the proper ratio of isopropyl alcohol and distilled water to reach a 75% solution.

General cleaning will help prolong the life and performance of your treadmill. Keep the unit clean and maintained by dusting the components on a regular basis. Clean both sides of the running belt to prevent dust from accumulating underneath the belt. Keep your running shoes clean so that dirt from your shoes does not wear out the running board and belt. Clean the surface of the running belt with a clean damp cloth.

To better maintain the treadmill and prolong its life it is suggested that the machine be powered off for 10 minutes every 2 hours and fully powered off whenever not in use.

A loose Running Belt will result in the runner sliding off when running, while too tight of a Running Belt will result in decrease to the motors performance and also create more friction between the roller and running belts. The most suitable tightness for the belts is pulled out 50-75mm from the Running Board.

Belt Adjustments

Place the treadmill on level ground and set it at 3-5MPH (6-8kph) to check if the Running Belt drifts.

1. If the Running Belt moves to the right, turn the adjusting bolt on the right side 1/4 turn clockwise, then turn the left adjustment bolt 1/4 turn anti-clockwise. If the belt does not move, repeat this step until it centers. Refer to figure A.

2. If the Running Belt moves to the left, turn the adjusting bolts on the left side 1/4 of a turn clockwise, then turn the right adjustment bolt 1/4 turn anti-clockwise. If the belt does not move, repeat this step until it centers. Refer to figure B.

3. Over time the Running Belt will loosen. To tighten the belt turn the Left & Right side adjustment bolts one full turn clockwise, check the tension of the belt. Continue this process until belt is at the correct tension. Make sure to adjust both sides equally to ensure correct belt alignment. Refer to figure C.

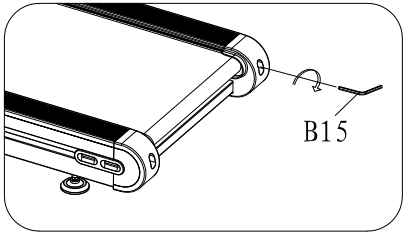

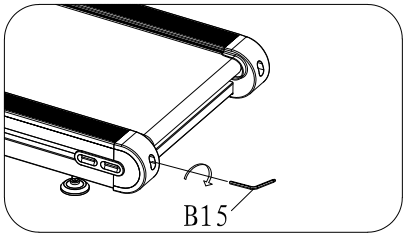

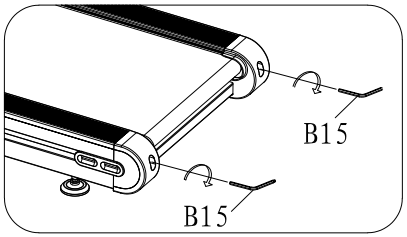

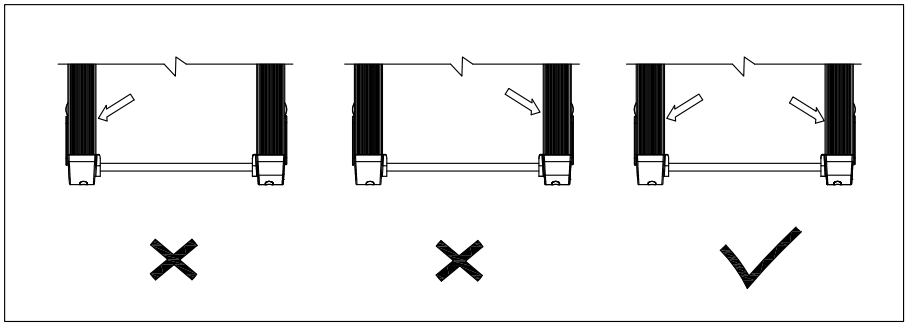

DO NOT OVERTIGHTEN – Over tightening will cause belt damage and premature bearing failure. If you tighten the belt a lot and it still slips, the problem could actually be the drive belt - located under the motor cover - that connects the motor to the front roller. If that belt is loose it feels similar to the walking belt being loose. Tightening the motor belt should be done by a trained service person.

DECK LUBRICATION

Lubrication Warning Function

This machine has lubrication warning function. After every total running distance of 300km, your treadmill needs to be maintained with oil. The system will remind with sound for every 10 seconds, and window will show “OIL”. This means that your treadmill needs to be lubricated with oil. Please read the user's manual first and add the oil to the middle part of running board. After you have finished lubrication, on the standby mode, please hold on “STOP” button for 3 seconds, and the system warning sound will disappear.

To ensure the longevity and proper function of your treadmill, proper belt maintenance is required. You should regularly check between the treadmill belt and the top of the treadmill base for proper lubrication, and to ensure that no dirt or debris has become trapped. Keeping the deck clean and lubricated at the recommended intervals ensures the longest life possible for your unit. Should lubrication dry out, or dirt become trapped, the friction between the belt and deck increases. Increased friction places undue stress on the drive motor, drive belt, and electronic motor control board which could result in catastrophic failure of these essential, expensive components.

Failure to clean and lubricate the deck at regular intervals may void the warranty.

As a part of your routine maintenance schedule, belt lubrication and cleaning should be performed every 90 days, after 90 hours of use, or earlier if you notice that the deck is dry or dirty. Please also be sure to check belt lubrication before first use.

Do not lubricate with anything other than XTERRA Fitness approved lubricant. Your treadmill comes with one tube of treadmill belt lubricant.

Extra tubes can be ordered directly from: www.Xterrafitness.com, or by calling our customer service department at (870)-336-4286.

Regularly check belt lubrication by completing the following steps:

1. Ensure that your machine is off, and that the power cord is unplugged to minimize risk of injury.
2. Reach between the running belt and the top of the treadmill base to verify that lubrication is present.

DECK LUBRICATION - CONTINUED

1. Raise the belt up on one side and apply lubricant to the running deck. Use a rag to thoroughly wipe the lubricant over the running deck. Repeat this process for the other side.
2. The moving parts should turn freely and quietly. Abnormality of moving parts will affect the safety of the equipment. Inspect and tighten bolts regularly.
3. To better maintain the treadmill and prolong its lifespan, it is suggested that maintenance be done on a regular basis.

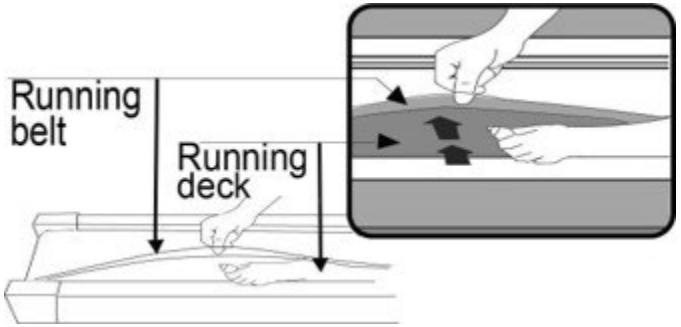

The following time table is recommended:

Light user (less than 3 hours/ week) every 14 weeks
Medium user (3-5 hours/ week) every 10 weeks
Heavy user (more than 5 hours/ week) every 8 weeks

EXPLODED VIEW DIAGRAM

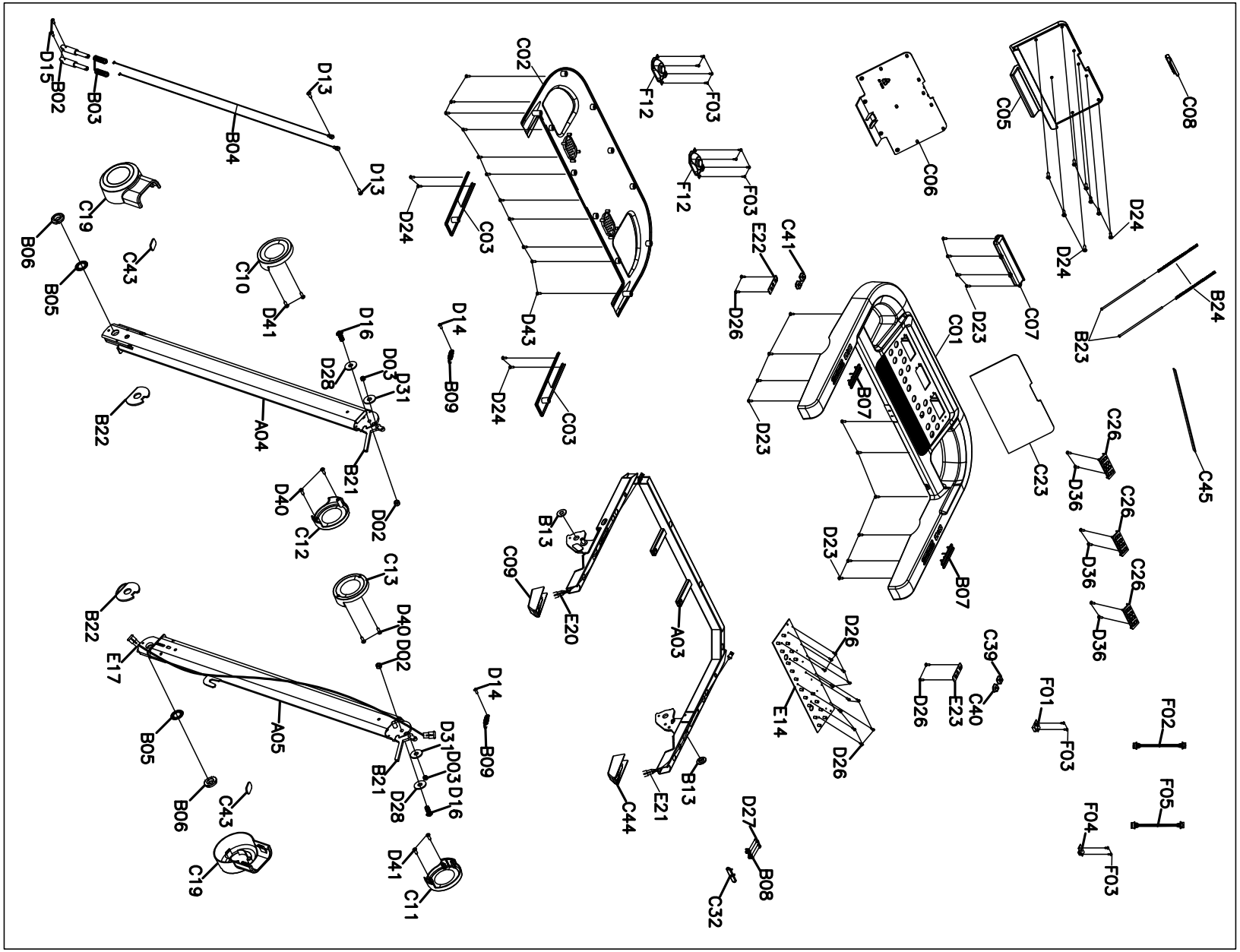

EXPLODED VIEW DIAGRAM

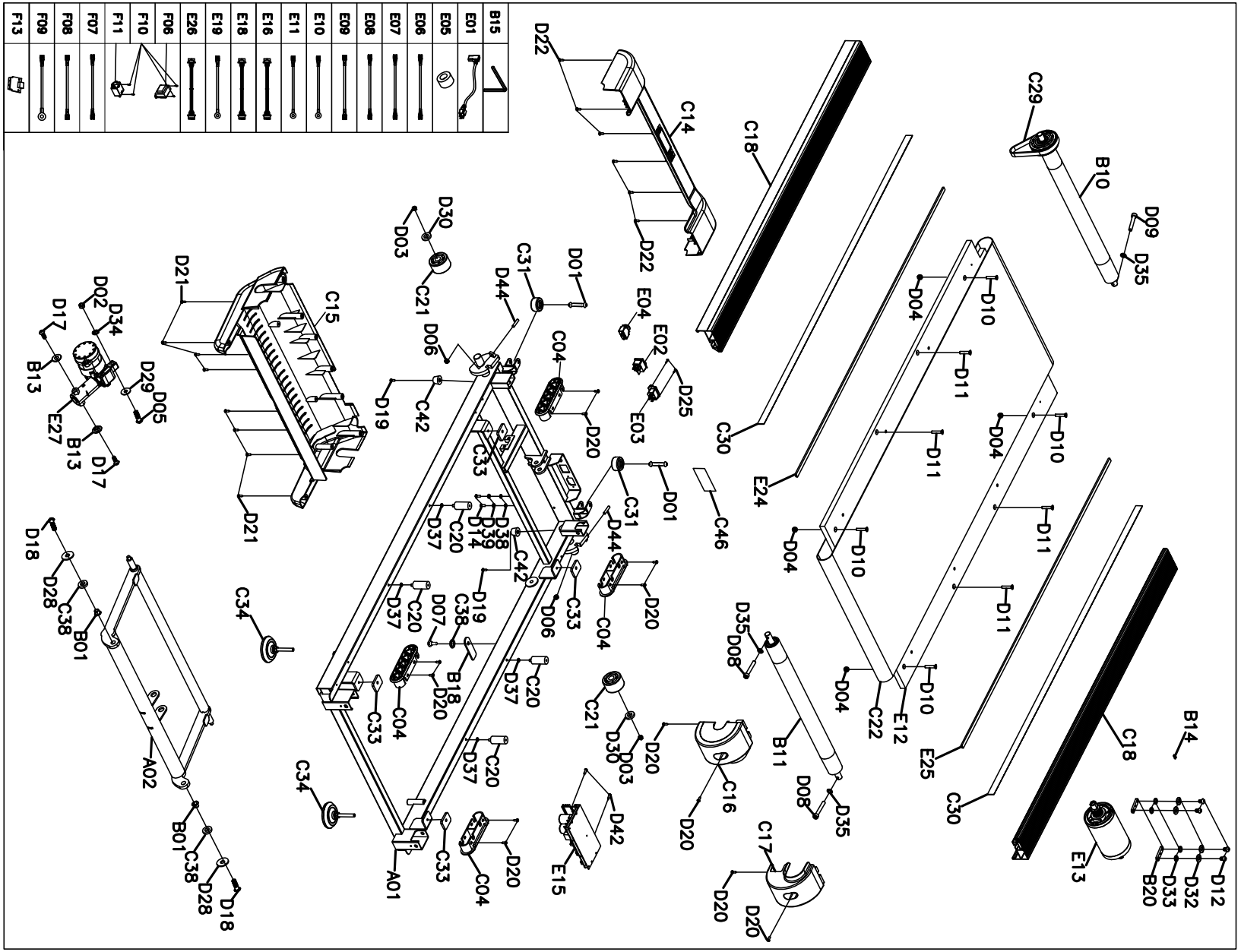

WARRANTY - RESIDENTIAL

Effective September 01, 2026- **TF100 Treadmill LIMITED WARRANTY**

XTERRA Fitness Inc. warrants all its home use treadmill parts for a period of time listed below, from the date of retail sale, as determined by a sales receipt. XTERRA Fitness's responsibilities include providing new or remanufactured parts, at XTERRA Fitness's option, and technical support to our independent dealers and servicing organizations. In the absence of a dealer or service organization, these warranties will be administered by XTERRA Fitness directly to a consumer. The warranty period applies to the following components:

Home Use Limited Warranty

Warranty	Frame	Motor	Parts	Labor
Residential	Lifetime	1 Year	90 Days	90 Days

RESPONSIBILITIES OF THE CONSUMER

This warranty applies only to products in ordinary household use, and the consumer/facility is responsible for the items listed below:

1. Proper use of the treadmill in accordance with the instructions provided in this manual
2. Proper installation in accordance with instructions provided with the treadmill and with all local electric codes.
3. Expenses for making the treadmill accessible for servicing, including any item that was not part of the treadmill at the time it was shipped from the factory.
4. Damages to the treadmill finish during shipping, installation or following installation.
5. Routine maintenance of this unit as specified in this manual.

WARRANTY - CONTINUED

What is not covered?

EXCLUSIONS

This warranty does not cover the following:

1. CONSEQUENTIAL, COLLATERAL, OR INCIDENTAL DAMAGES SUCH AS PROPERTY DAMAGE AND INCIDENTAL EXPENSES RESULTING FROM ANY BREACH OF THIS WRITTEN OR ANY IMPLIED WARRANTY.
   Note: Some states do not allow the exclusion or limitation of incidental or consequential damages, so this limitation or exclusion may not apply to you.
2. Service call reimbursement to the consumer. Service call reimbursement to the dealer that does not involve malfunction or defects in workmanship or material, for units that are beyond the warranty period, for units that are beyond the service call reimbursement period, for treadmill not requiring component replacement, or treadmill not in ordinary household or light commercial use.
3. Damages caused by services performed by persons other than authorized XTERRA Fitness service companies; use of parts other than original XTERRA Fitness parts; or external causes such as corrosion, discoloration of paint or plastic, alterations, modifications, abuse, misuse, accident, improper maintenance, inadequate power supply, or acts of God.
4. Products with original serial numbers that have been removed or altered.
5. Products that have been: sold, transferred, bartered, or given to a third party.
6. XTERRA Fitness reserves the right to request proof of purchase if no warranty record exists for the product.
7. THIS WARRANTY IS EXPRESSLY IN LIEU OF ALL OTHER WARRANTIES EXPRESSED OR IMPLIED, INCLUDING THE WARRANTIES OF MERCHANTABILITY AND/OR FITNESS FOR A PARTICULAR PURPOSE.
8. Product use in any environment other than a residential setting or non-dues paying facility with 5 hours use or less per day.
9. Warranties outside of the United States may vary. Please contact your local dealer for details.

Product features or specifications as described or illustrated are subject to change without notice. All warranties are made by XTERRA Fitness, Inc. This warranty applies only in the 48 contiguous United States. NOTE: This does not include Alaska or Hawaii.

WARRANTY - CONTINUED

Responsibilities of the Owner

SERVICE

Keep your bill of sale. 90 days from the date on the bill of sale establishes the labor warranty period should service be required. If service is performed, it is in your best interest to obtain and keep all receipts. This written warranty gives you specific legal rights. You may also have other rights that vary from state to state. Service under this warranty must be obtained by following these steps, in order:

1. Contact your selling authorized XTERRA Fitness dealer. OR
2. Contact your local authorized XTERRA Fitness service organization.
3. If there is a question as to where to obtain service, contact our service department at (870) 336-4286.
4. XTERRA Fitness' obligation under this warranty is limited to repairing or replacing, at XTERRA Fitness' option, the product through one of our authorized service centers. All repairs must be preauthorized by XTERRA Fitness. If the product is shipped to a service center freight charges to and from the service center will be the customer's responsibility. For replacement parts shipped while the product is under warranty, the customer will be responsible for shipping and handling charges. For in-home service, the customer will be responsible for a trip charge. There will be an additional trip charge if the customer is located over 100 miles from the nearest service center.
5. The owner is responsible for adequate packaging upon return to XTERRA Fitness. XTERRA Fitness is not responsible for damages in shipping. Make all freight damage claims with the appropriate freight carrier. DO NOT SHIP ANY UNIT TO OUR FACTORY WITHOUT A RETURN AUTHORIZATION NUMBER. All units arriving without a return authorization number will be refused.

For any further information, or to contact our service department by mail, send your correspondence to:

XTERRA Fitness, Inc.

P.O. Box 2037

Jonesboro, AR 72402-2037

Product features or specifications as described or illustrated are subject to change without notice. All warranties are made by XTERRA Fitness, Inc. This warranty applies only in the 48 contiguous United States. NOTE: This does not apply to Alaska or Hawaii.

TROUBLESHOOTING

PROBLEM	POSSIBLE CAUSE	SUGGESTED ACTION
E01 - Communication fault (driver did not receive console signal); E15 - Communication fault (console did not receive driver signal)	A: Console signal cable not properly connected or poor contact	Reconnect the cable
	B: Console signal cable damaged (short circuit or open circuit)	Replace the signal cable
	C: Console signal circuit fault	Replace the console
	D: Driver signal circuit fault	Replace control board
E03 - No speed sensor signal (for drivers with speed sensing)	A: Speed signal cable not properly connected, or Hall sensor damaged (if equipped)	Reconnect speed signal cable, or replace Hall sensor
	B: Driver sensing circuit faulty	Replace control board
E04 - Incline self-test learning failure (for drivers with incline)	A: Incline motor cable or signal cable not properly connected	Check wiring for errors, reconnect cables
	B: Incline motor faulty	Replace the incline motor
	C: Driver faulty	Replace control board
E05 - Overvoltage fault	Input voltage too high	Check input power supply
E06 - Over current	A: Control board may be broken	Replace Control board
	B: Motor may be broken	Replace Motor

TROUBLESHOOTING - CONTINUED

PROBLEM	POSSIBLE CAUSE	SUGGESTED ACTION
E07 - Overloading fault	A: Overloading triggered over currency protection	Please restart the machine
	B: The treadmill is stuck and therefore the motor is unable to rotate properly	Please clear any obstructions, ensure the treadmill is properly adjusted, lubricate the running belt and restart the machine.
	C: Motor faulty	Replace the motor
E18 - Driver faulty	Driver faulty	Replace control board
E20 - Under voltage fault	Input voltage too low	Check input power supply

3000 Nestle Road Jonesboro, AR 72401 | Phone: (870) 336-4286 | Fax: 870-935-7611 | questions@xterrafitness.com

©2026 All Rights Reserved.