XTERRA FITNESS

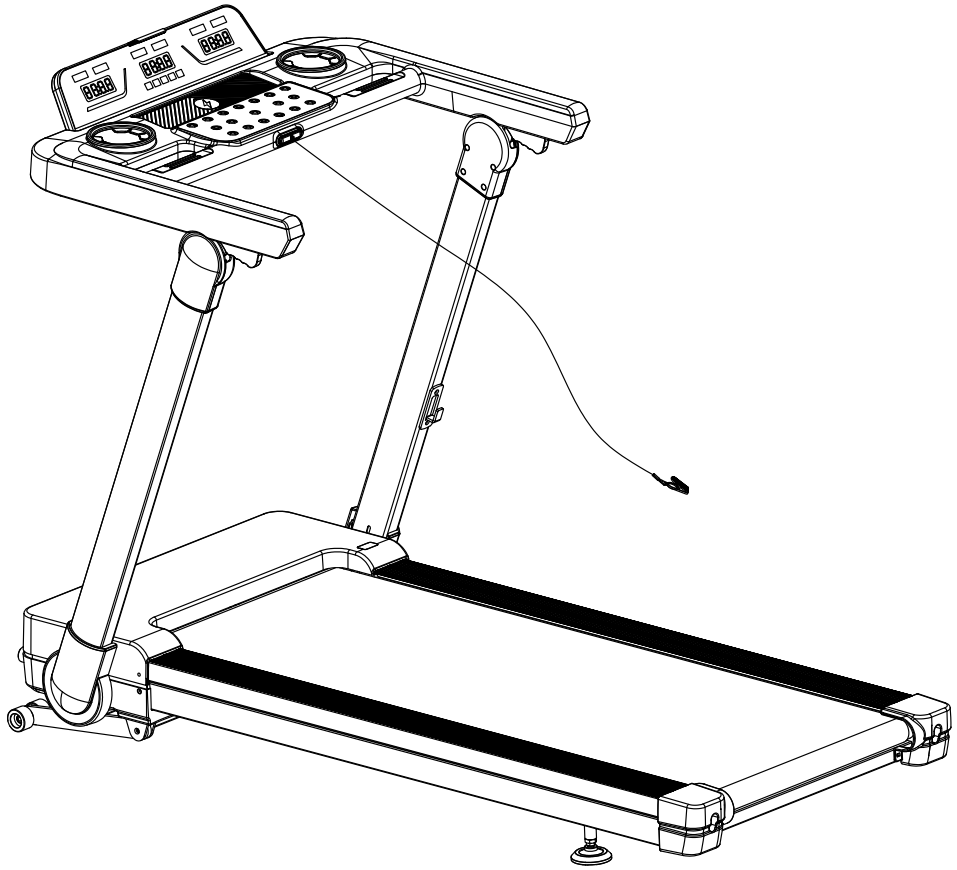

TF300 TREADMILL

TF300_OwnersManual_130816_20260901

Online Support

If you require assistance or are experiencing issues with your XTERRA Machine, please contact customer care for additional help.

1-(870) 336-4286

questions@xterrafitness.com

Warranty Registration

Scan to quickly and easily register your new XTERRA Fitness machine.

Table of Contents

Product Registration 3

Warning / Safety Instructions

Product Labels 4

Safety Instructions 5

Electrical Safety 6

Grounding & Location Requirements 7

Parts & Assembly

Parts of your treadmill 9

Pack List 10

Assembly 11

Moving your treadmill 18

Storing your treadmill 19

Technology and Features

Safety stop key 21

About Your Machine 22

Console Screen - Overview 23

Operation Guide 24

Program Settings 26

Functions 30

Using the XF Connect App 32

Heart Rate Exertion 33

Maintenance

Maintenance & Care 35

Deck Lubrication 37

Exploded View Diagram 39

Warranty 41

Troubleshooting 44

PRODUCT REGISTRATION

Congratulations on your new treadmill, and welcome to the XTERRA Fitness family!

Thank you for your purchase of this quality unit from XTERRA Fitness. Your new unit was manufactured by one of the leading fitness manufacturers in the world and is backed by one of the most comprehensive warranties available. XTERRA Fitness will do all we can to make your ownership experience as pleasant as possible for many years to come.

If you have questions, or if parts are missing or damaged, or you require customer service, call (870) 336-4286. Please have your model number and serial number handy when you call.

Please take a moment at this time to record the name of the dealer, their telephone number, and the date of purchase below to make any future, needed contact easy. We appreciate your support and we will always remember that you are the reason that we are in business.

Serial Number	
Date of Purchase	
Dealer / Place of Purchase	

WARRANTY REGISTRATION

Use your smartphone to scan the QR code above to quickly and easily register your new XTERRA Fitness machine.

You can also go to **xterrafitness.com/warranty** under the Support tab to register online.

Version: 1.0
Revision: 09/01/26

PRODUCT LABELS

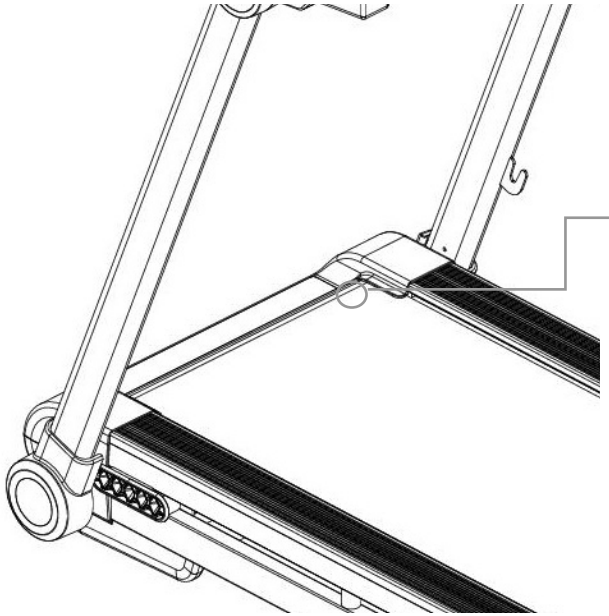

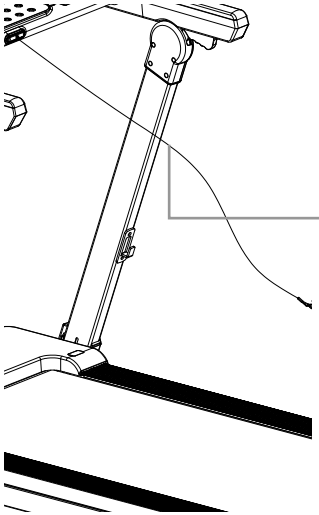

SERIAL NUMBER

XTERRA

(870)336-4286

SERIAL NUMBER STICKER

This sticker will be found on the rear of the motor cover. Please record the number below the barcode for the purpose of registering your treadmill's warranty.

WARNING: Cancer and Reproductive Harm - www.P65Warnings.ca.gov

PROPOSITION 65 WARNING

This sticker will be found on the rear of the motor cover. The State of California requires us to inform you that this unit was manufactured using chemicals that could cause harm with improper use.

SAFETY WARNING STICKER

This sticker will be found on the interior side of your treadmill's upright. The same warning can be found in this manual. Please read and be aware of the pre-cautions before operating your unit.

WARNING AVERTISSEMENT

SERIOUS INJURY COULD OCCUR IF THESE PRECAUTIONS ARE NOT OBSERVED.

- Consult your physician before use.
- Stop immediately if you become dizzy or experience chest pains and consult your physician.
- Heart Rate monitoring systems can be inaccurate; use them for reference only.
- Read all warnings on the unit and be properly instructed or read the Owner's Manual on how to use before beginning.
- Inspect this machine for damage prior to use.
- Keep body, clothing, and fitness accessories clear of moving parts.
- Risk of personal injury – Keep children under the age of 13 away from machine.

Le non respect de ces directives pourrait entraîner des blessures graves, voir mortelles:

- Consultez votre médecin avant de l'utiliser.
- Arrêtez immédiatement en cas d'étourdisse-ments ou des douleurs à la poitrine et consultez votre médecin.
- Les lectures de fréquence cardiaque peuvent être inexactes; utiliser à titre indicatif seulement.
- Lisez tous les avertissements et les instructions sur l'appareil et dans le manuel du propriétaire avant l'utilisation.
- Inspectez cet appareil pour tout dommages avant de l'utiliser.
- Garder le corps, les vêtements et accessoires d'entraînement à l'écart des pièces mobiles.
- Risque de blessures- gardez les enfants âgés de moins de 13 ans loin de l'appareil.

SAFETY INSTRUCTIONS

When using an electrical appliance, basic precautions should always be followed, including the following. Read all instructions before using this appliance.

DANGER - To reduce the risk of electric shock:
Always unplug this appliance from the electrical outlet immediately after using and before cleaning.

WARNING - To reduce the risk of burns, fire electric shock, or injury to persons:

DO NOT USE AN EXTENSION CORD: DO NOT ATTEMPT TO DISABLE THE GROUNDED PLUG BY USING IMPROPER ADAPTERS OR IN ANY WAY MODIFY THE CORD SET.

1. Install the treadmill on a flat level surface with access to correct voltage and frequency, grounded outlet.
2. Do not operate treadmill on deeply padded, plush or shag carpet. Damage to both carpet and treadmill may result.
3. Do not block the rear of the treadmill. Provide a minimum of 3 ft clearance between the rear of the treadmill and any fixed object.
4. Place your unit on a solid, level surface when in use.
5. Never allow children on or near the treadmill.
6. When running, make sure the plastic clip is fastened on your clothing. It is for your safety, should you fall or move too far back on the treadmill.
7. Keep hands away from all moving parts.
8. Never operate the treadmill if it has a damaged cord or plug.
9. Keep the cord away from heated surfaces.
10. Do not operate where aerosol spray products are being used or where oxygen is being administered. Sparks from the motor may ignite a highly flammable environment.
11. Never drop or insert any object into any openings.
12. The treadmill is intended for in-home use only and not suitable for long time running.
13. To disconnect, turn all controls to the off position, remove the safety key, and then remove the plug from the outlet.
14. The pulse sensors are not medical devices. Various factors, including the user's movement, may affect the accuracy of heart rate readings. The pulse sensors are intended only as exercise aids in determining heart rate trends in general.
15. Use handrails provided; they are for your safety.
16. Wear proper shoes. High heels, dress shoes, sandals or bare feet are not suitable for use on your treadmill. Quality athletic shoes are recommended to avoid leg fatigue.
17. Allowed temperature: 40F to 104F degrees.
18. **User Weight Limit: 265 lbs.**

Please ensure that you review and adhere to the user weight restrictions and power requirements of your new machine. Failure to do so may result in serious injury or damage to your machine.

IMPORTANT OPERATION INSTRUCTIONS

1. An appliance should never be left unattended when plugged in. Unplug from outlet when not in use, and before putting on or taking off parts.
2. Do not operate under blanket or pillow. Excessive heating can occur and cause fire, electric shock, or injury to persons.
3. This exercise equipment is not intended for use by persons with reduced physical, sensory or mental capabilities, or lack of experience and knowledge.
4. Use this appliance only for its intended use as described in this manual. Do not use attachments not recommended by the manufacturer.
5. Never operate this appliance if it has a damaged cord or plug, if it is not working properly, if it has been dropped or damaged, or dropped into water. Return the appliance to a service center for examination and repair.
6. Do not carry this appliance by supply cord or use cord as a handle.
7. Keep the cord away from heated surfaces.
8. Never operate the appliance with the air openings blocked. Keep the air openings free of lint, hair, and the like.
9. Never drop or insert any object into any opening.
10. Do not use outdoors.
11. Do not operate where aerosol (spray) products are being use or where oxygen is being administered.
12. Connect this appliance to a properly grounded outlet only. See Grounding Instructions.
13. The appliance is intended for household use.
14. To disconnect, turn all controls to the off position, then remove the plug from the outlet.
15. Do not operate equipment on deeply padded, plush or shag carpet. Damage to both carpet and equipment may result.
16. Before beginning this or any exercise program, consult a physician. This is especially important for persons over the age of 35 or persons with pre-existing health conditions.
17. Keep hands away from all moving parts.
18. The pulse sensors are not medical devices. Various factors, including the user's movement, may affect the accuracy of heart rate readings. The pulse sensors are intended only as exercise aids in determining heart rate trends in general.
19. Do not attempt to use your equipment for any purpose other than for the purpose it is intended.
20. Do not operate tablet or laptop when you are running, walking or climbing at high speed.
21. Wear proper shoes. High heels, dress shoes, sandals or bare feet are not suitable for use on your equipment. Quality athletic shoes are recommended to avoid leg fatigue.

ELECTRICAL SAFETY

WARNING!

Route the power cord away from any moving part of the unit including the elevation mechanism and transport wheels.

NEVER remove any cover without first disconnecting AC power. If voltage varies by ten percent (10%) or more, the performance of your unit may be affected. **Such conditions are not covered under your warranty.** If you suspect the voltage is low, contact your local power company or a licensed electrician for proper testing.

NEVER expose this unit to rain or moisture. This product is **NOT** designed for use outdoors, near a pool or spa, or in any other high humidity environment. The temperature specification is 40 degrees C, and humidity is 95%, non-condensing (no water drops forming on surfaces).

Circuit breakers: Avoid AFCI/GFCI circuit breakers if possible. These breakers may trip occasionally during exercise because of the high inrush currents of the unit drive electronics and motor. This is an issue that affects all unit brands. New laws in your area may require these breakers. If you do have these breakers and outlets in your home, and are experiencing nuisance tripping, you should check if there are any other devices plugged into the same circuit. Some examples of devices that may also cause tripping are fluorescent lights with electronic ballasts, coffee maker, space heater, hair drier.

Optimally the unit should be the only device plugged into the circuit. Our units have surge suppressors built in to help avoid nuisance tripping. We have tested several AFCI/GFCI breakers and outlets with our products. Brands we have tested are: Eaton (Cutler Hammer Series), Leviton (Smart lock pro) and Schneider Electric (Canadian home series). These breakers do not trip in our testing, when connected to our units, as long as no other devices are plugged into the same circuit.

- **NEVER** operate this unit without reading and completely understanding the results of any operational change you request from the computer.
- **NEVER** use a ground fault circuit interrupt (GFCI) wall outlet with this treadmill. Route the power cord away from any moving part of the treadmill including the elevation mechanism and transport wheels.
- **NEVER** operate treadmill on Generator or UPS power supply.
- **NEVER** remove any cover without first disconnecting AC power.
- **NEVER** expose this treadmill to rain or moisture. This treadmill is not designed for use outdoors, near a pool, or in any other high humidity environment.
- Understand that changes in speed and incline do not occur immediately. Set your desired work level on the computer console and release the adjustment key. The computer will obey the command gradually.
- **NEVER** use your unit during an electrical storm. Surges may occur in your household power supply that could damage unit components. Unplug the unit during an electrical storm as a precaution.
- Use caution while participating in other activities while walking on your unit; such as watching television, reading, etc. These distractions may cause you to lose balance which may result in serious injury.
- Do not use excessive pressure on console control keys. They are precision set to function properly with little finger pressure.

GROUNDING & LOCATION REQUIREMENTS

This product must be grounded. If the unit should malfunction or breakdown, grounding provides a path of least resistance for electric current, reducing the risk of electric shock. This product is equipped with a cord having an equipment-grounding plug. The plug must be plugged into an appropriate outlet that is properly installed and grounded in accordance with all local codes and ordinances.

! DANGER - Improper connection of the equipment-grounding conductor can result in a risk of electric shock. Check with a qualified electrician or serviceman if you are in doubt as to whether the product is properly grounded. Do not modify the plug provided with the product if it will not fit the outlet; have a proper outlet installed by a qualified electrician.

This product is for use on a nominal 120-volt circuit, and has a grounding plug that looks like the plug illustrated below. A temporary adapter that looks like the adapter illustrated below may be used to connect this plug to a 2-pole receptacle as shown below if a properly grounded outlet is not available. The temporary adapter should be used only until a properly grounded outlet, (shown below) can be installed by a qualified electrician. The green colored rigid ear-lug, or the like, extending from the adapter, must be connected to a permanent ground such as a properly grounded outlet box cover. Whenever the adapter is used, it must be held in place by a metal screw.

Location Requirements

After assembling your treadmill, you'll need to make sure you've installed it in a safe area.

- We recommend that you leave an area of at least 20in on the front, and sides of your machine. The front of the unit is where the motor is located.
- We recommend that you leave an area of at least 6ft behind the treadmill.
- Install your treadmill in an area where children and pets cannot access it.
- Always keep the area around your treadmill clear of furniture, exercise equipment and other debris.
- Do not install your treadmill on deeply padded, plush, or shag carpet.

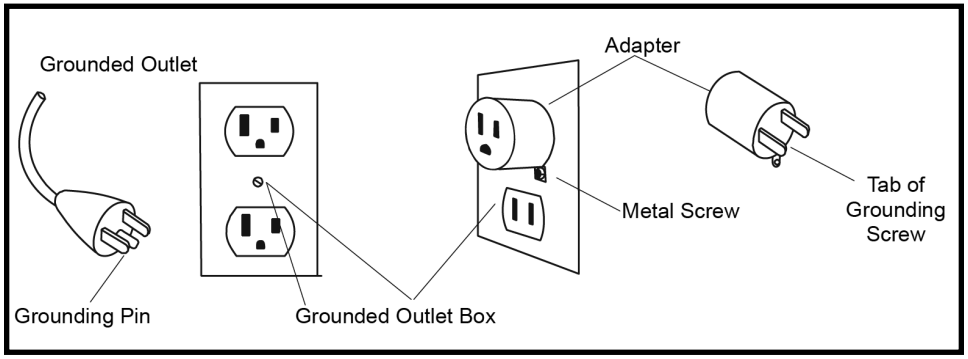

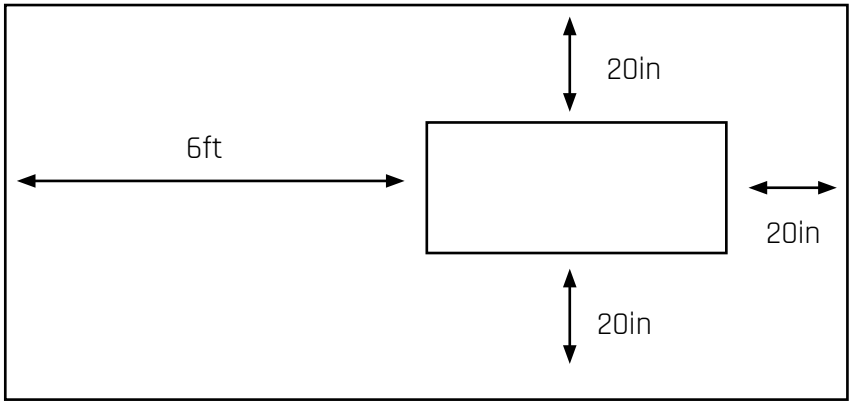

PARTS OF YOUR TREADILL

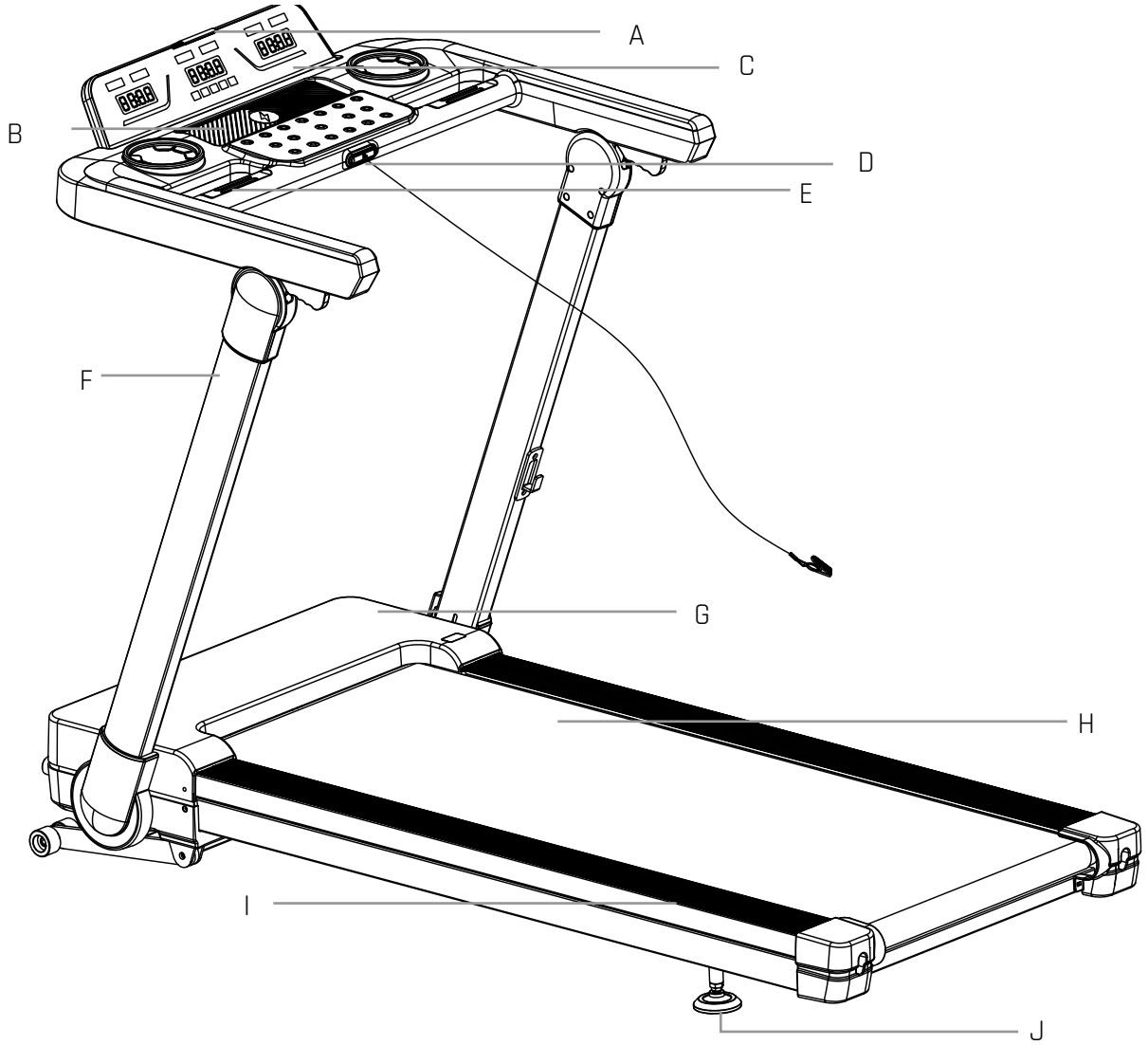

A. Tablet Holder
B. Wireless Charging
C. LED Screen
D. Safety stop key
E. Hand pulse sensors
F. Uprights
G. Motor cover
H. Belt
I. Side rails
J. Levelers

PACK LIST

No	Description	Quantity
A	Main frame	1
B	Lubrication oil	1
B08	Allen Wrench	1
C19	Bottom cover of the column	2
E13	Power cord	1
C	Safety Key	1

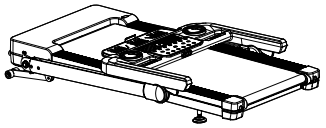
A


B

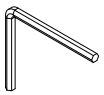
B08


C19


E13


C

ASSEMBLY

1. Take out the treadmill from the carton and lay it aside on the smooth ground.

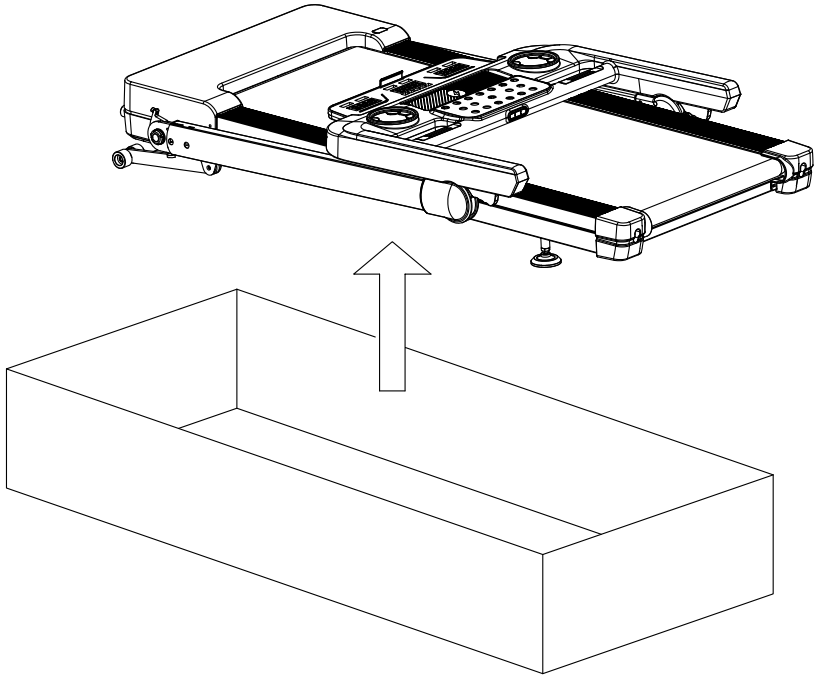

ASSEMBLY - 2 - CONTINUED

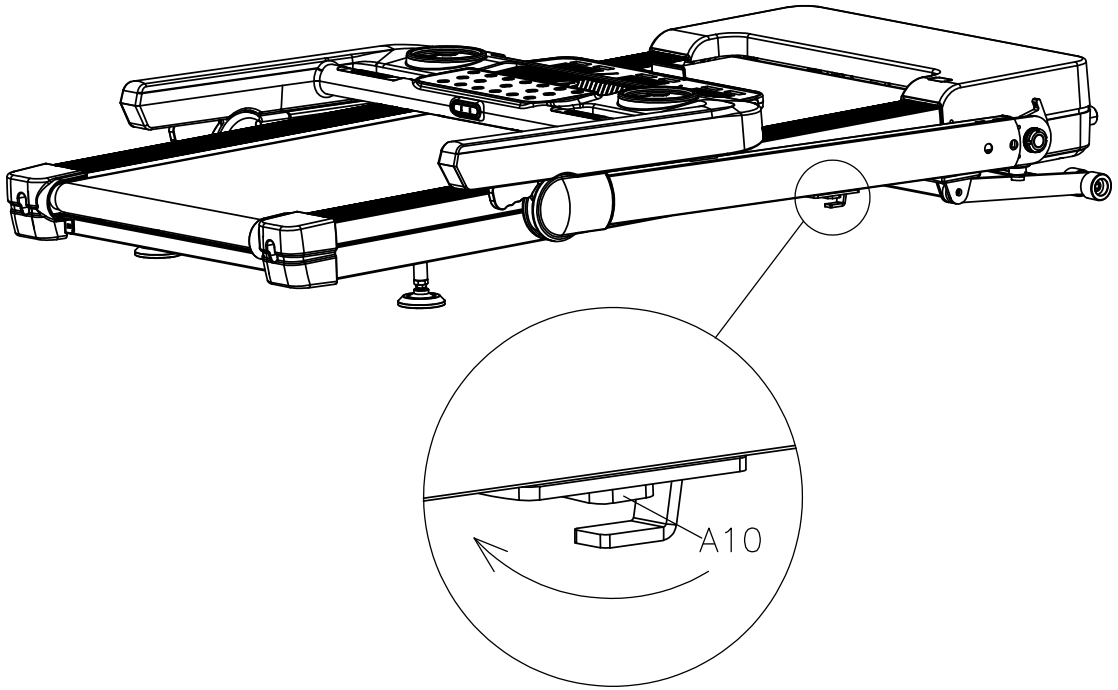

ASSEMBLY - 3 - CONTINUED

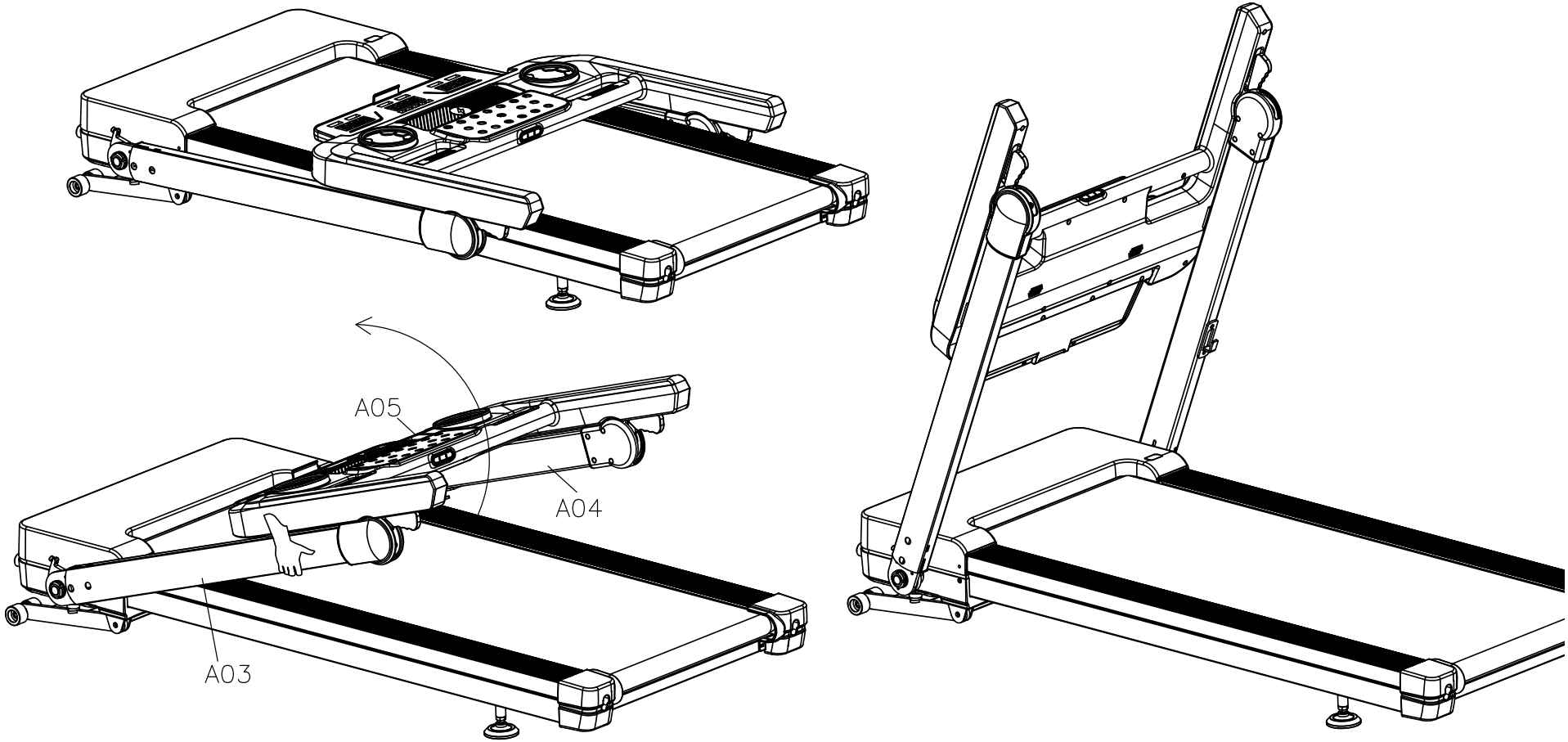

ASSEMBLY - 3 - CONTINUED

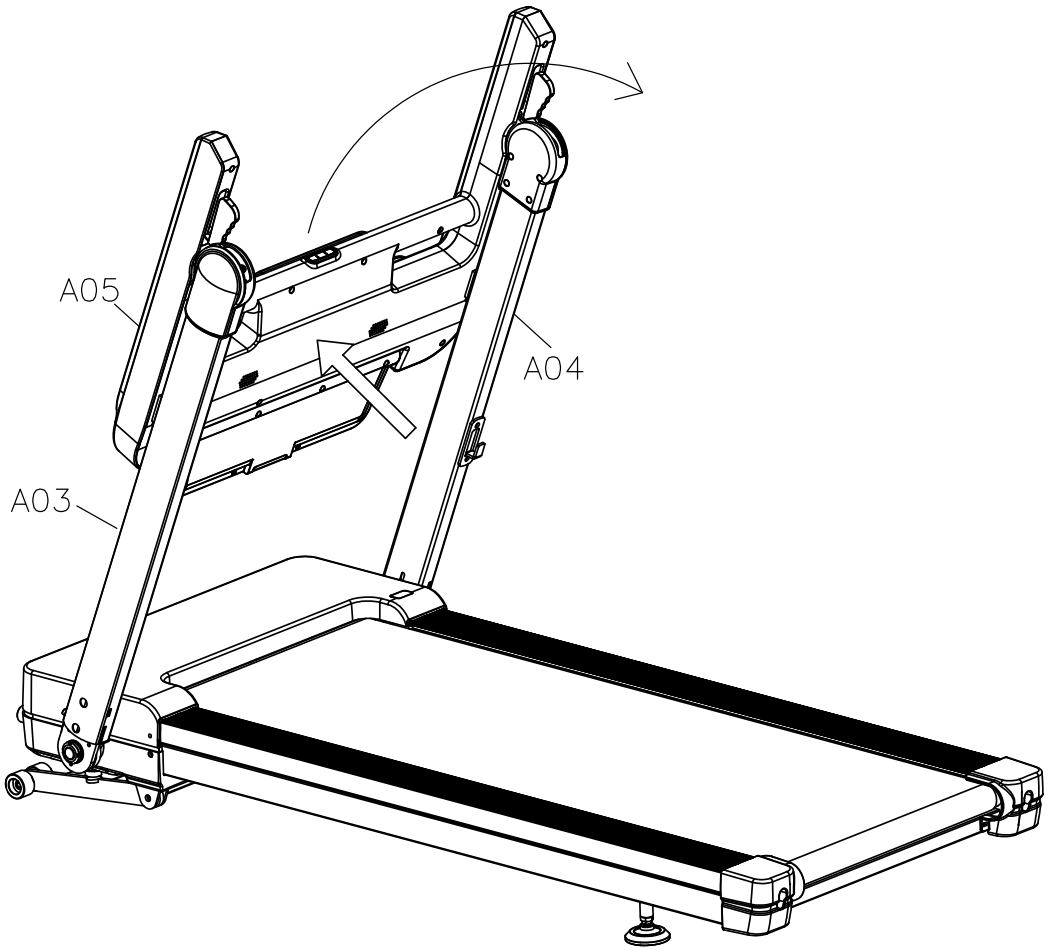

ASSEMBLY - 4 - CONTINUED

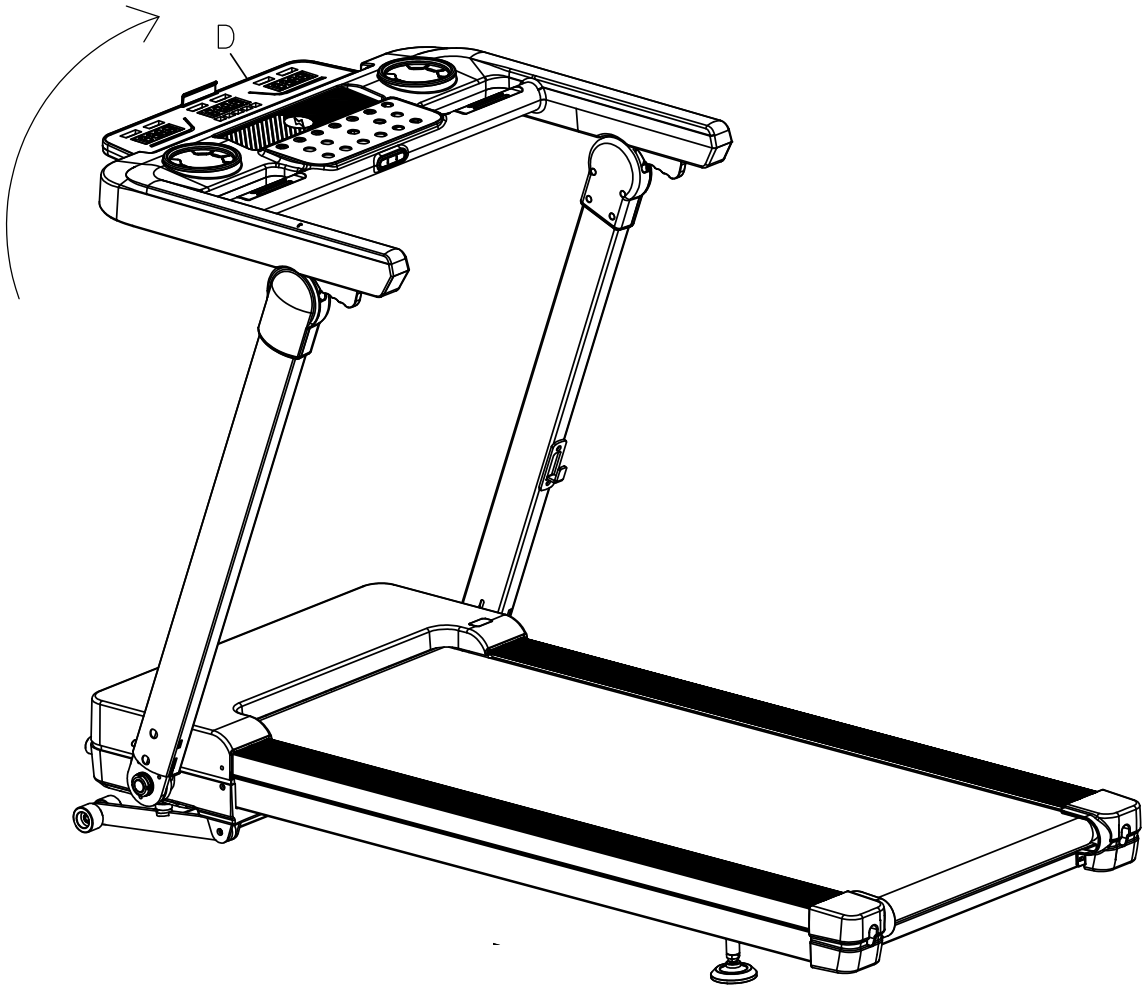

ASSEMBLY - 5 - CONTINUED

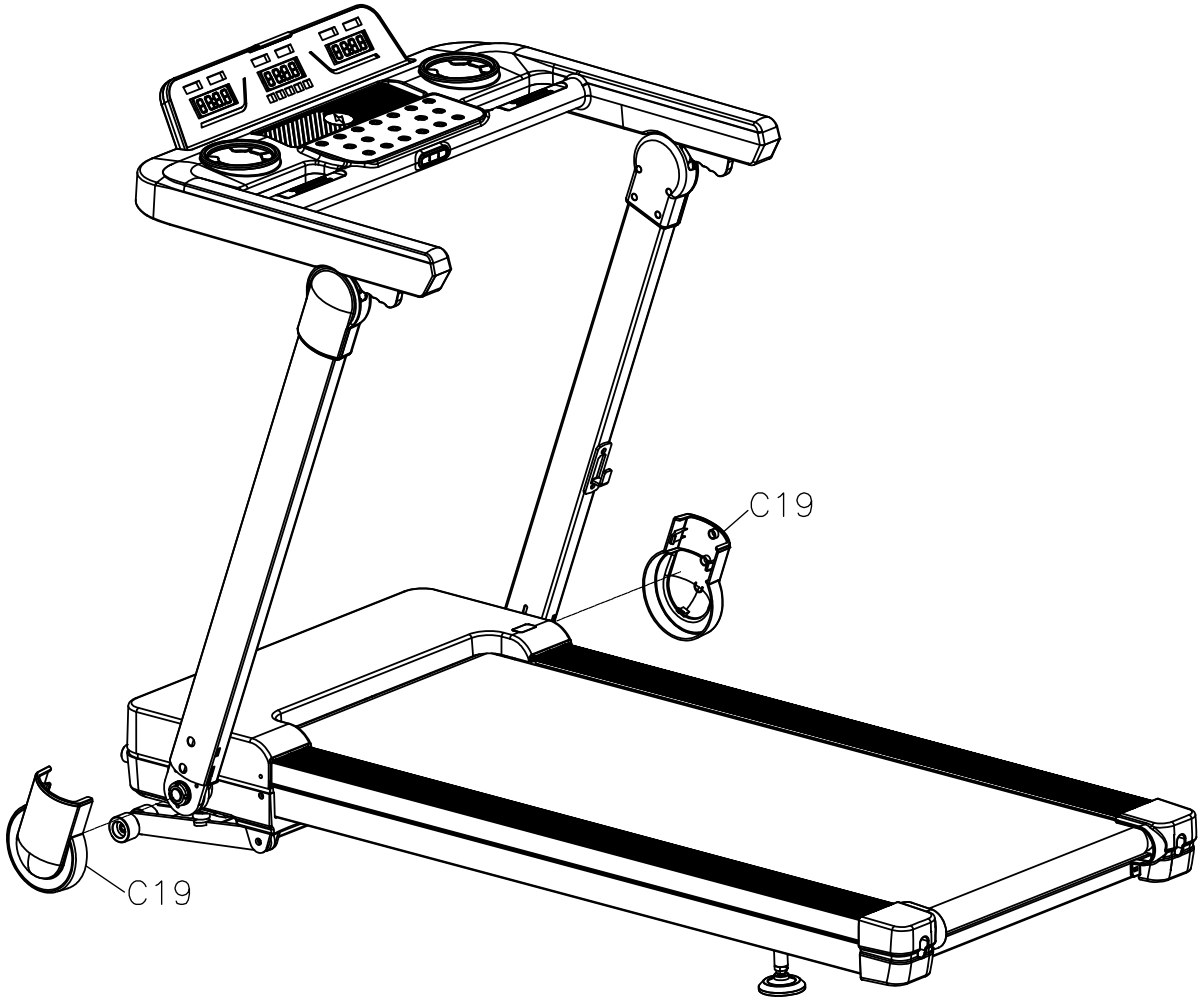

ASSEMBLY - 6 - CONTINUED

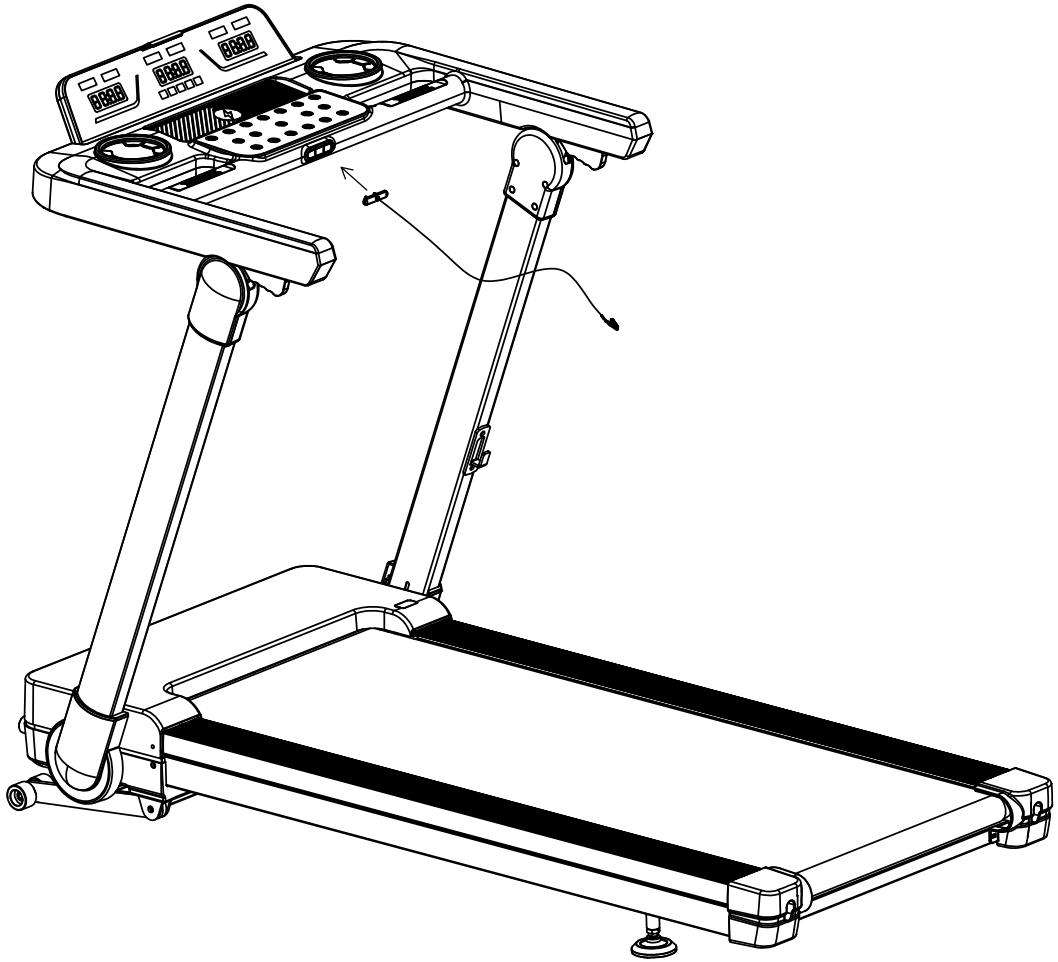

IMPORTANT: You will need to lubricate your treadmill before the first use. Please see pages 35-36 for lubrication instructions.

MOVING YOUR TREADMILL

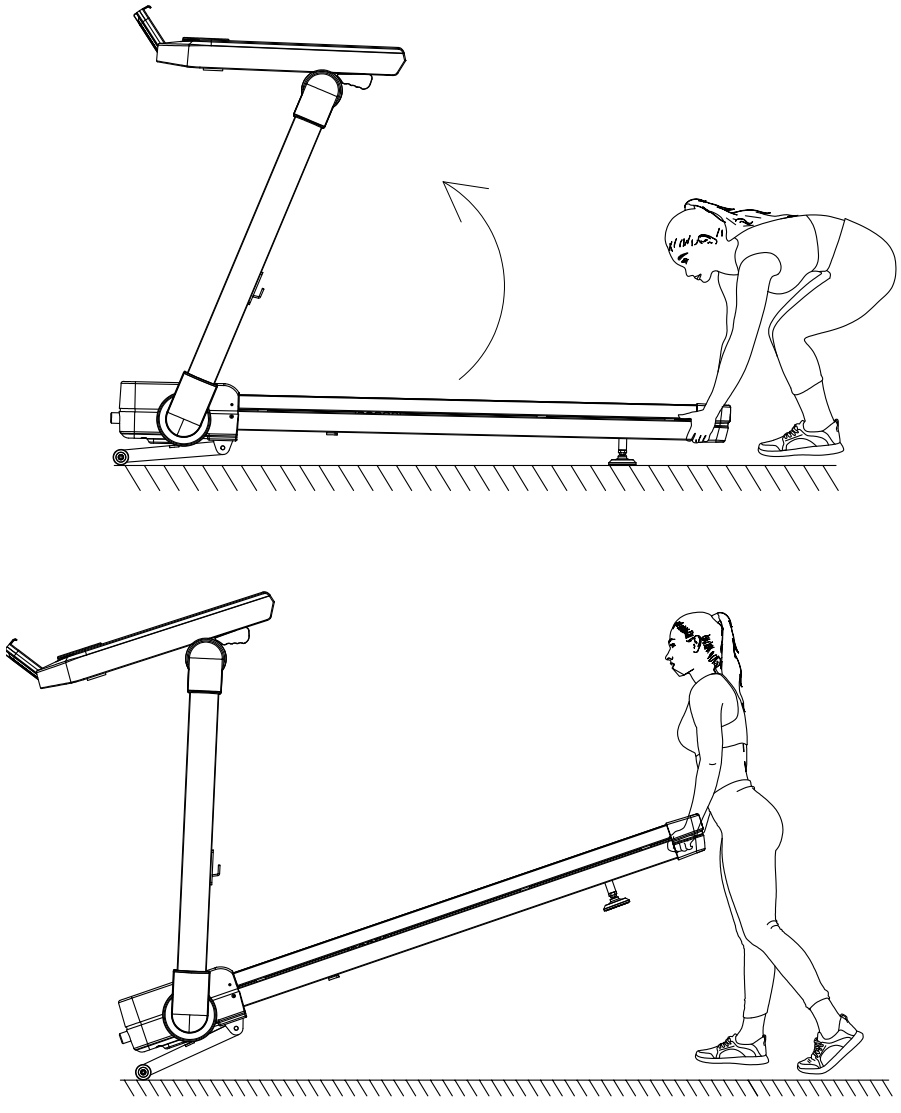

STORING YOUR TREADMILL

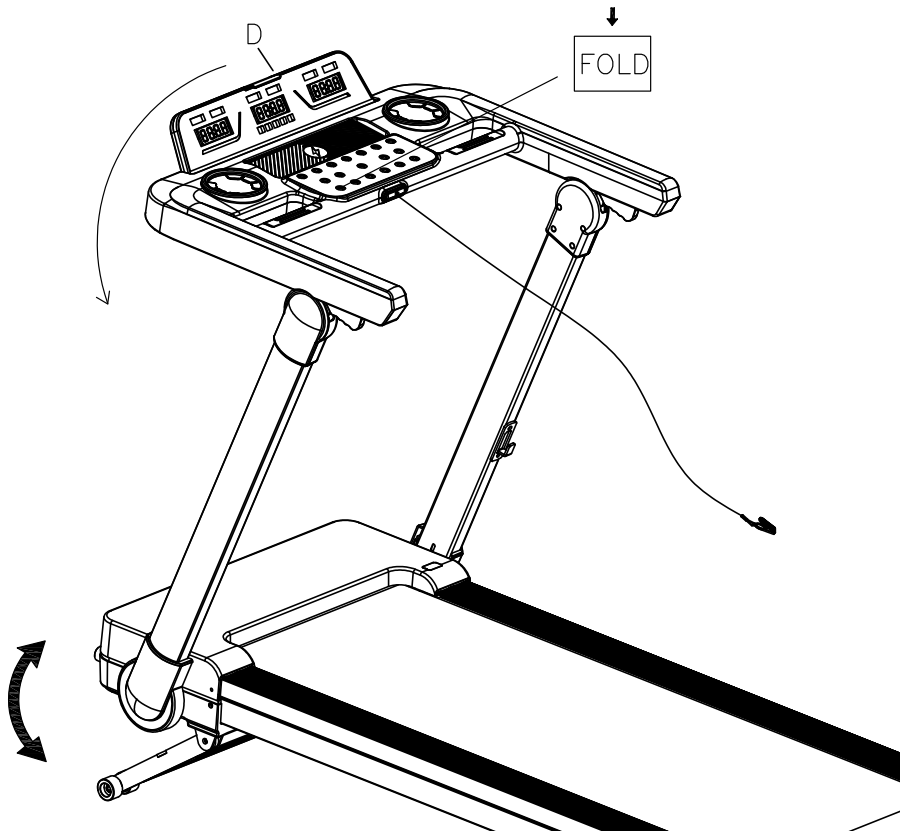

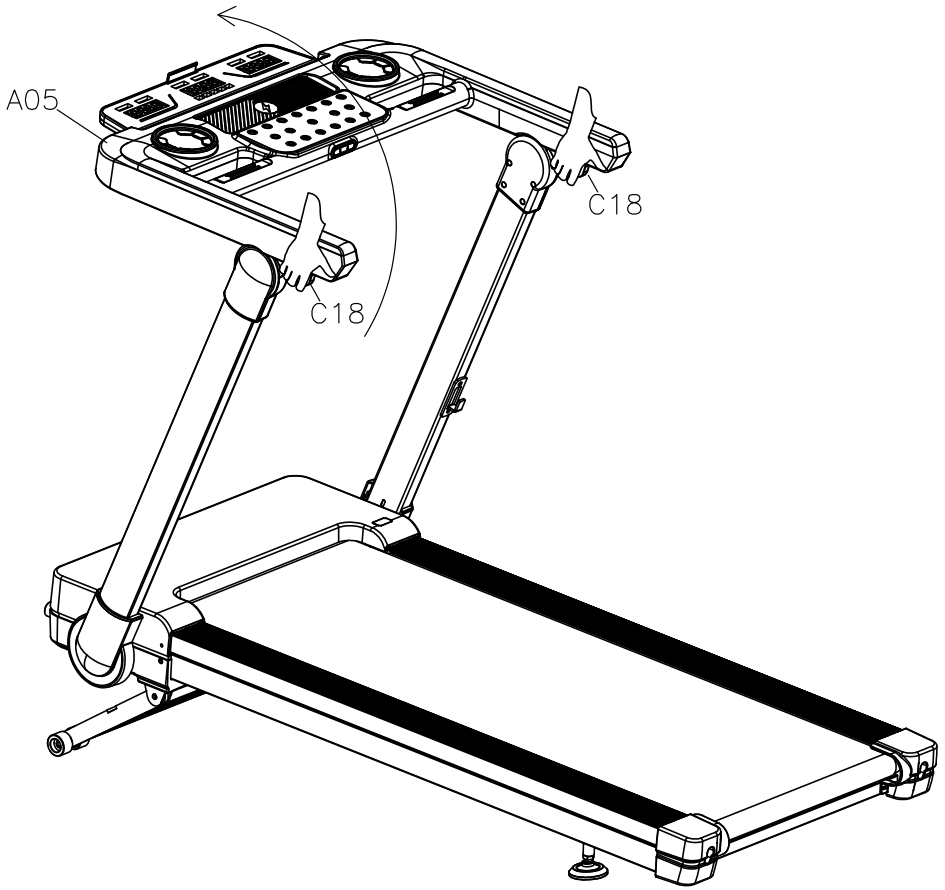

STORING YOUR TREADMILL

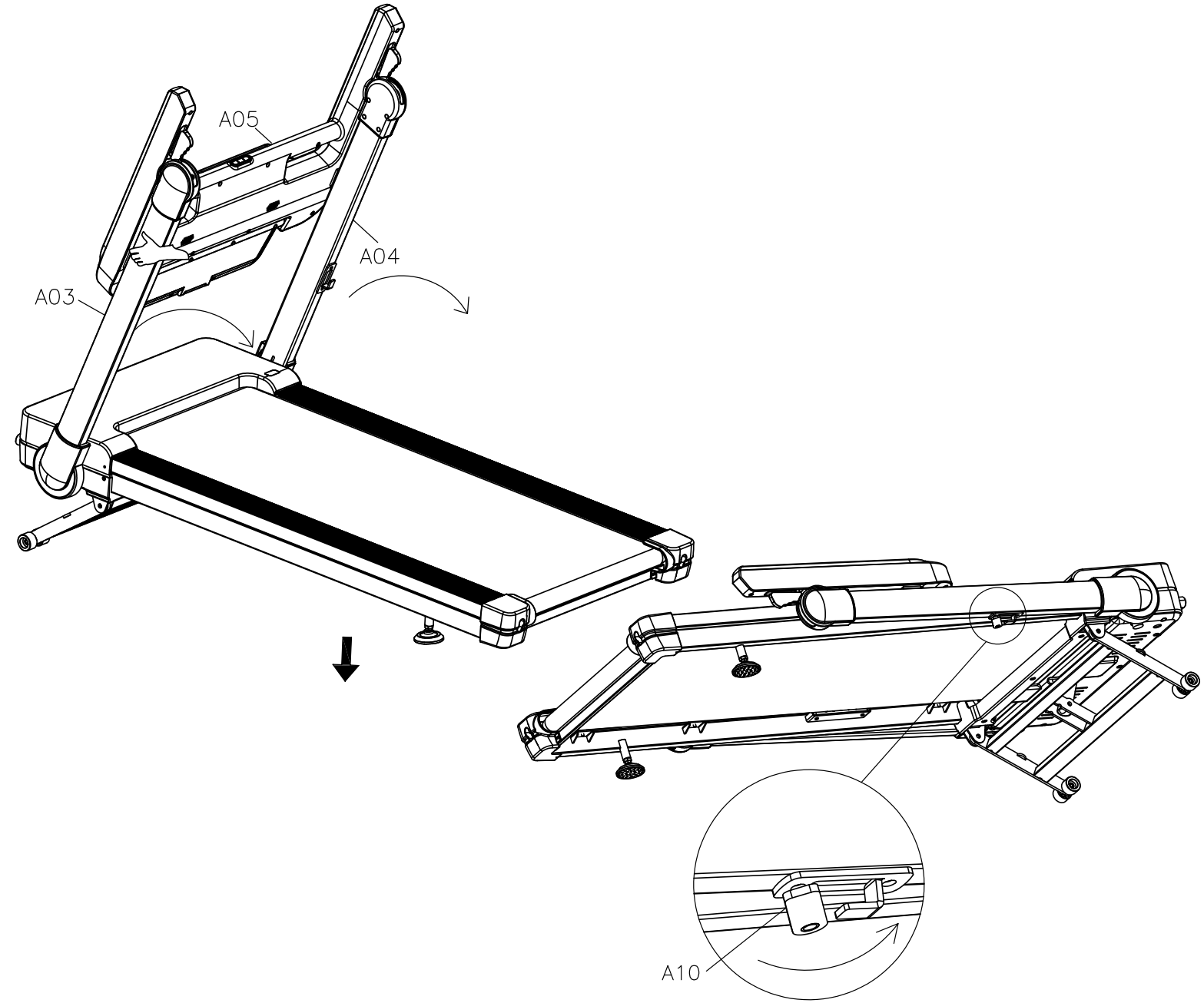

SAFETY STOP KEY

A safety tether cord is provided with this unit.
It is a simple magnetic design that should be used at all times.
It is for your safety should you fall or move too far back on the tread-belt.
Pulling this safety tether cord will stop tread-belt movement.

Before exercising, check that the power is connected and the safety key is functional. If any abnormal situation occurs during exercise, pull the safety key immediately. The treadmill will rapidly decelerate and stop. Reinsert the safety key to reset the device and wait for input.
If this unit has any issues, please contact your dealer. Non-professionals should not attempt to disassemble or repair it to avoid damage.

To Use:

1. Place the magnet into position on the round metal portion of the console control head. Your unit will not start and operate without this. Removing the magnet also secures the unit from unauthorized use.
2. Fasten the plastic clip onto your clothing securely to ensure good holding power. Note: The magnet has strong enough power to minimize accidental, unexpected stopping. The clip should be attached securely to make certain it does not come off. Be familiar with its function and limitations. The unit will stop, depending on speed, with a one to two step coast anytime the magnet is pulled off the console. Use the Stop / Pause switch in normal operation.

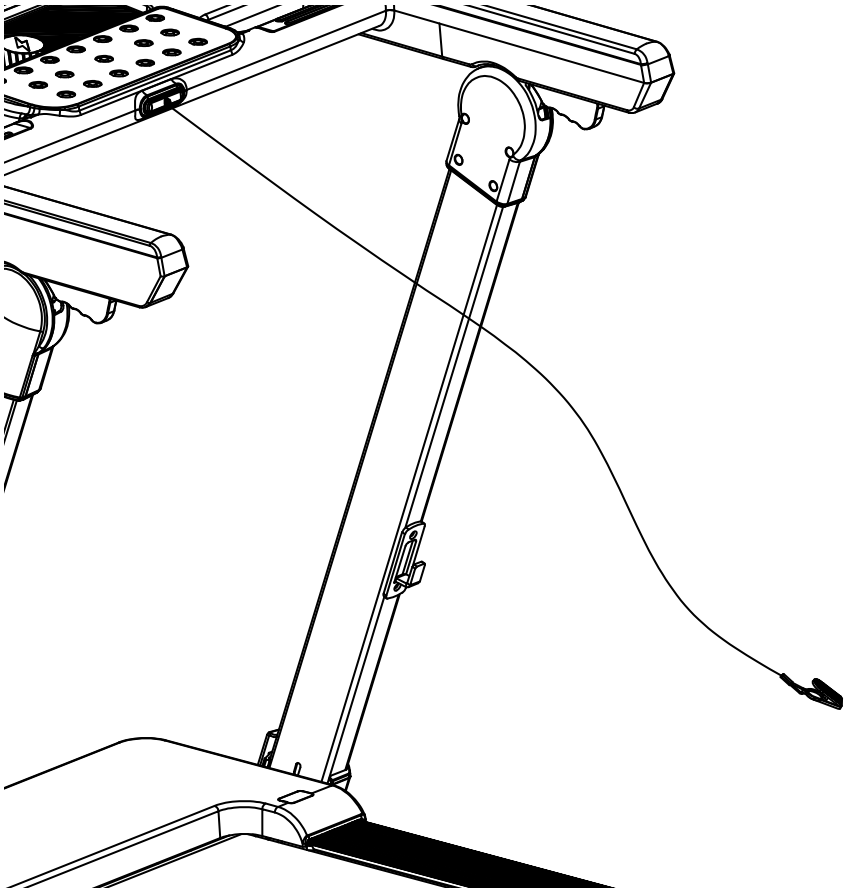

ABOUT YOUR MACHINE

Always use care and caution when operating your machine. Follow instruction in this manual to ensure safe operation and maintenance of your treadmill

Your new XTERRA Fitness treadmill has Bluetooth connectivity to give you access to the most advanced workout experiences available. Follow the instructions on page 30 to learn more about using the Bluetooth capabilities to their fullest potential.

Downloading the XF Connect app will help unlock more features - such as tracking workouts and sharing data via Google Fit and Apple Fitness. Simply search for "XF Connect" in the app store on your smartphone or tablet, or scan the QR code on the right



The XF Connect app is available on Google Play and the Apple App Store. Scan the QR Code below, and quickly and easily sign up to start taking your workout experience to a whole new level.

Available on the App Store

GET IT ON Google play

Be sure to follow XTERRA Fitness on your favorite social media platforms to view and share the latest fitness videos, images, and news.

facebook.com/XterraFitness

www.instagram.com/XterraFitness

youtube.com/user/XterraFitnessOnline

CONSOLE SCREEN - OVERVIEW

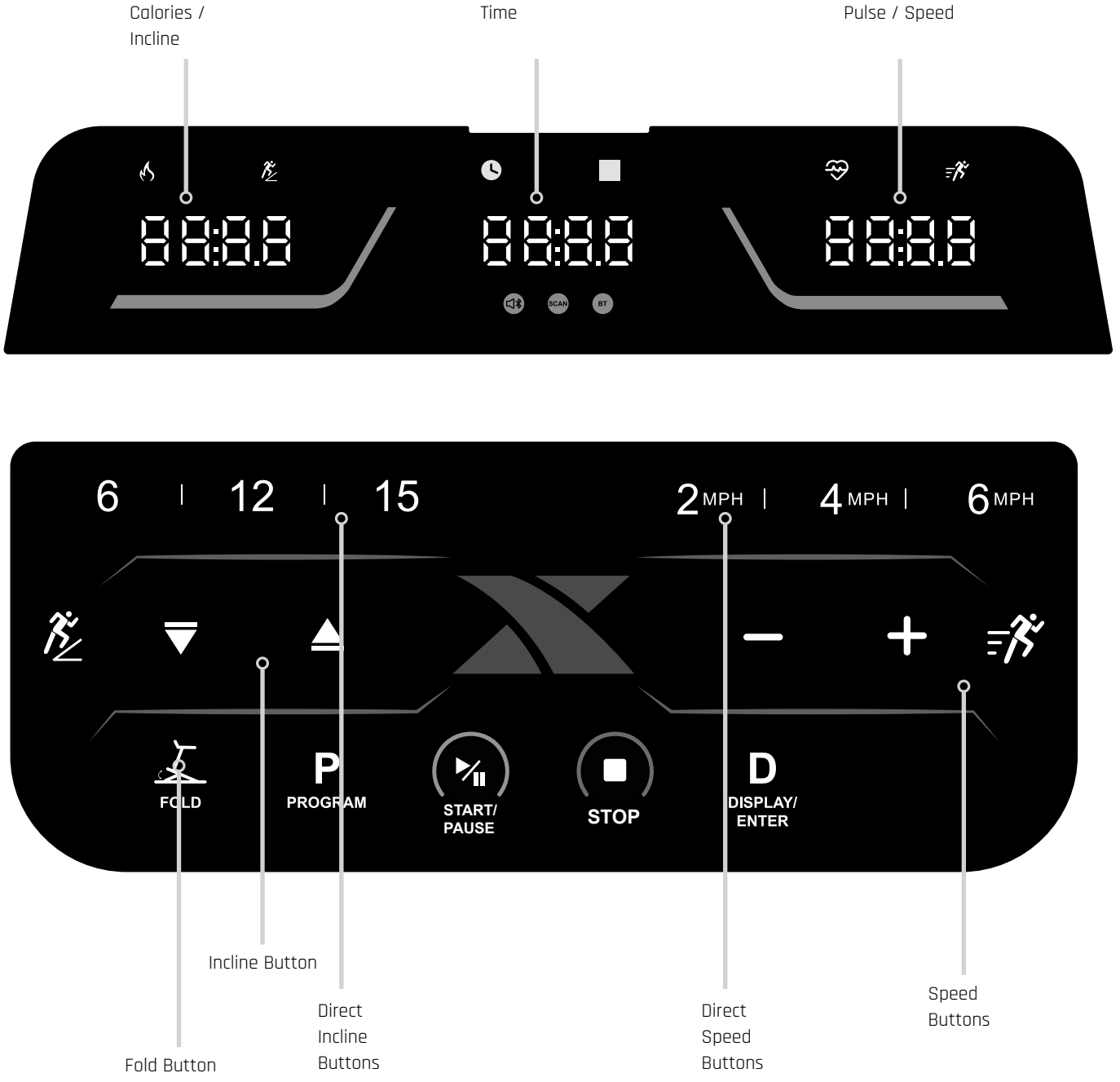

OPERATION GUIDE

Display Windows

"SPEED" & "PUL." Window: Displays current speed during operation. Speed display range: Imperial 0.6-12.5 MPH / Metric 1.0-20.0 KM/H. When the user grips both hand pulse sensors, the system detects and displays heart rate in this window. Heart rate display range: 50-200 bpm. (Data is for reference only and not intended for medical use.)

"TIME" & "DISTANCE" Window: In setting mode, displays "P1...-P15-U01-U02-U03-FAT". Displays exercise time. Count-up timer from 0:00-99:59 (min:sec), resets upon reaching max value; Count-down timer decreases from set time (max setting 90 minutes) to zero. When it reaches 0:00, the treadmill decelerates smoothly, stops, and displays "End". It enters standby mode 5 seconds after stopping. During operation, displays distance: Count-up from 0.00-99.99, resets and counts up from 0 upon overflow; Count-down from set value to zero. When it reaches 0, the treadmill decelerates smoothly, stops, and displays "End". It enters standby mode 5 seconds after stopping.

"INCL." & "CAL." Window: Displays current incline level. Incline display range: 0-15 levels.

Displays calories burned. Count-up from 0.0-9999, resets and counts up from 0 upon overflow; Count-down from set value to zero. When it reaches 0, the treadmill decelerates smoothly, stops, and displays "End". It enters standby mode 5 seconds after stopping.

Key Functions

- "P" (Program) Key: In standby mode, press this button to cycle through 18 different programs: "P1-P2...P15-U01-U02-U03-FAT". Manual mode is the default mode, with default speed of Imperial 0.6 MPH / Metric 1.0 KM/H.(P1-P15 are built-in programs; U01-U02-U03 are user-defined programs; FAT is the body fat test.)
- "D Display/Enter" Key: Press this button to cycle through countdown modes: "10:00" (Time), "1.00" (Distance), "50.0" (Calories). In each mode, use the Speed +/- and Incline +/- keys to set the desired value. Press the "START" key to begin operation.
- "START/PAUSE" Key: Press this button to start or pause the treadmill.
- "SPEED +" & "SPEED -" Keys: In setting mode, adjust the set value. During operation, adjust speed. Adjustment increment is 0.1 per press. Holding down for more than 0.5 seconds triggers continuous increase or decrease.
- "INCLINE +" & "INCLINE -" Keys: In setting mode, adjust the set value. During operation, adjust incline. Adjustment increment is 1 level per press. Holding down for more than 0.5 seconds triggers continuous increase or decrease.
- "INCLINE: 6, 12, 15" Quick Incline Keys: For rapid incline selection.
- "SPEED 4, 6, 10" quick speed keys for rapid speed selection.
- "STOP" Key: Press during operation to stop the treadmill.

OPERATION GUIDE - CONTINUED

Quick Start:
Turn on the power switch and insert the magnetic safety key into the designated slot below the console panel.
Press the "START" key. The system enters a 3-second countdown with audible beeps, showing the countdown numbers. After the countdown, the treadmill starts running at (Imperial 0.6 MPH, Metric 1.0 KM/H).
After starting, adjust the speed using the Speed +/- or Quick Speed keys, and adjust the incline using the Incline +/- or Quick Incline keys as desired.

Operation During Exercise:
Press Speed Decrease key to decrease the running speed.
Press Speed Increase key to increase the running speed.
Press Incline Decrease key to lower the incline.
Press Incline Increase key to raise the incline.
Press a Quick Speed key to adjust the speed directly to the corresponding value.
Press a Quick Incline key to adjust the incline directly to the corresponding value.
Press the Stop key to decelerate and stop the treadmill.
When the user grips both hand pulse sensors, heart rate will be displayed within approximately 5 seconds.

Manual Mode:
In standby mode, press the "START" key directly. The treadmill starts running at (Imperial 0.6 MPH, Metric 1.0 KM/H) and 0 incline. Other windows count up from 0. Use "INCLINE +", "INCLINE -", "SPEED +", and "SPEED -" keys to change incline and speed.

In standby mode, press the "D" DISPLAY/ENTER key to enter Time Countdown mode. "TIME" window flashes "10:00". Use "INCLINE +/-", "SPEED +/-" keys to set exercise time. Setting range: 10:00 --- 90:00.

In Time Countdown mode, press "D" to enter Distance Countdown mode. "DIST" window flashes "1.00". Use "INCLINE +/-", "SPEED +/-" keys to set distance. Setting range: 0.50 --- 99.90.

In Distance Countdown mode, press "D" to enter Calorie Countdown mode. "CAL" window flashes "50.0". Use "INCLINE +/-", "SPEED +/-" keys to set calories. Setting range: 10.0 --- 999.0.

After selecting and setting one of the three countdown modes, press the "START" key. The treadmill starts after a 3-second delay. Adjust speed and incline with "INCLINE +/-" and "SPEED +/-". Press the "STOP" key to stop the treadmill.

Built-in Programs:
The system features 15 built-in programs P1-P15. In standby mode, repeatedly press the "P" PROGRAM key; the distance window shows "P1-P15 U1-U3 FAT". Select a desired program, then press "INCLINE +/-" to display the preset time "10:00" (flashing in the TIME window). Use "INCLINE +/-", "SPEED +/-" to set the desired workout time. Press "P" PROGRAM again to return to the "P1-P15" program display. Press "START" to begin the program. Each built-in program consists of 10 segments; each segment's duration = set time / 10. A beep sound signals the transition to the next segment. Speed and incline change according to the program profile. While the program runs, you can temporarily adjust speed/incline using the +/- keys, but the next segment will revert to the program's preset values. Upon completing the program, the system emits a beep sound, the treadmill decelerates smoothly, stops, displays "End", and enters standby mode after 5 seconds.

PROGRAM SETTINGS

Program Description:

SPEED refers to speed, INCLINE refers to incline level. Each program divides the total exercise time into 10 equal segments, each with corresponding speed and incline values.

		Set time / 10 = running time for each segment									
		1	2	3	4	5	6	7	8	9	10
P1	SPEED	2	4	3	4	3	5	4	2	5	3
	INCLINE	1	2	3	3	1	2	2	3	2	2
P2	SPEED	2	6	7	8	3	6	8	7	5	2
	INCLINE	1	2	3	3	2	2	3	4	2	2
P3	SPEED	3	8	3	8	5	9	5	9	12	6
	INCLINE	1	3	5	7	9	10	8	6	5	2
P4	SPEED	8	10	11	12	12	11	10	10	9	8
	INCLINE	1	2	2	3	1	2	2	2	2	1
P5	SPEED	6	10	12	9	11	8	12	7	9	3
	INCLINE	1	2	4	3	2	2	4	5	2	1
P6	SPEED	2	8	6	10	10	9	11	8	5	3
	INCLINE	2	2	3	2	3	4	5	6	5	3
P7	SPEED	2	6	7	9	7	9	6	5	4	2
	INCLINE	4	5	6	6	9	9	10	12	6	3
P8	SPEED	2	4	6	8	7	8	9	6	4	2
	INCLINE	3	5	4	4	3	4	4	3	3	2
P9	SPEED	2	4	5	7	6	5	8	6	3	2
	INCLINE	3	5	3	4	2	3	4	2	3	2
P10	SPEED	2	3	5	3	3	5	3	6	3	3
	INCLINE	4	4	3	6	7	8	8	6	3	3

PROGRAM SETTINGS

Program	Parameter	1	2	3	4	5	6	7	8	9	10
P11	SPEED	2	5	8	10	6	9	5	3	2	2
	INCLINE	1	3	5	8	10	7	6	3	2	3
P12	SPEED	2	5	5	4	4	6	4	2	3	4
	INCLINE	3	5	6	7	12	9	11	11	6	3
P13	SPEED	2	7	4	7	8	9	4	5	3	2
	INCLINE	5	6	6	4	6	5	8	9	4	2
P14	SPEED	2	6	5	4	8	6	5	2	3	3
	INCLINE	5	6	5	8	4	5	5	10	6	3
P15	SPEED	2	6	5	4	8	7	5	3	3	2
	INCLINE	3	4	5	6	3	5	5	6	4	3

USER-DEFINED PROGRAMS

In addition to the 15 built-in programs, the treadmill features 3 user-defined programs (U1, U2, U3) that allow users to customize settings according to personal preferences.

1. Setting User-Defined Programs:

In standby mode, repeatedly press the “P PROGRAM” button until the desired user-defined program (U1, U2, or U3) is displayed. Press “incline+”, “incline-”, “speed+”, “speed-” while the “time” window blinks, displaying the preset time of 10:00. After setting the desired exercise time, press “D DISPLAY/ENTER” to confirm and enter the program parameter setup. You can then set the parameters for the first time segment: use “speed+”, “speed-” or quick buttons to set speed, and “incline+”, “incline-” or quick buttons to set incline. Press “mode” to complete the first segment setup and enter the second segment setup. Continue until all 10 time segments are set. The data will be permanently saved until the next modification. This data will not be lost due to power outage.

2. Starting User-Defined Programs:

In standby mode, repeatedly press the “P PROGRAM” button until the desired user-defined program (U1, U2, or U3) is displayed. After setting the running time, press “start” to begin.

3. User-Defined Program Setup Notes:

Each program divides the exercise time into 10 equal time segments. You must complete the speed, incline, and running time settings for all 10 segments before pressing “start” to launch the treadmill.

FIT TEST

From standby mode, press “P PROGRAM” button until you get to FAT.

-Press “D DISPLAY/ENTER” button to enter information.

Set value with INCLINE+/- from F-1 to F-4(F-1 GENDER, F-2 AGE, F-3 HEIGHT, F-4 WEIGHT)

-Press D DISPLAY/ENTER button to enter F-5(F—5 BODY FAT TEST), hold hands on the hand pulse sensor, the console will display your body fat value after 3 seconds.

-The body fat value is intended as a guide, and is not medical data:

F-1	Gender	01 Male	02 Female
F-2	Age	10-99	
F-3	Height	100-200 CM	
F-4	Weight	20 - 150 KG	
F-5	Fat	<19	Underweight
	Fat	=(20 - 25)	Normal Weight
	Fat	=(26 - 29)	Overweight
	Fat	>30	Obesity

FUNCTIONS

Display Value Ranges

Parameter	Initial	Default Set Value	Setting Range	Display Range
Time (min:sec)	0:00	10:00	10:00 - 90:00	0:00 - 99:59
Incline (Levels)	0	0	0 - 15	0 - 15
Speed	0.6MPH 1.0KMH	0.6MPH 1.0KMH	0.6-12.5MPH 1.0-20KMH	0.6-12.5MPH 1.0-20KMH
Distance (Miles/KM)	0.00	1.00	0.50 - 99.90	0.0 - 99.99
Heart Rate (bpm)	P	N/A	N/A	50 - 200
Calories (kcal)	0	50.0	10.0 - 999.0	0.0 - 9999

Safety Lock Function

In any state, pulling the safety key will immediately stop the treadmill. Upon emergency stop, all windows display "---" and the buzzer sounds "BB" three times. The treadmill cannot perform any other operations except powering off. Reinserting the safety key correctly resets the treadmill to standby mode, ready for input.

Power Save Function

This system features a power-saving function. If no key input is detected for 10 minutes in standby mode, the system enters power-saving mode and automatically turns off the display. Press any key to reactivate the system.

Shutdown

The treadmill can be turned off at any time by switching off the power switch. This will not damage the treadmill.

Transfer between KPH & MPH

Under standby mode, insert safety key, press SPEED+ and INCLINE+ buttons together and hold on about 5 seconds until you hear beep sound, and then you can finish the transfer between kph and mph.
Under KPH, speed starts with 1.0km/h. Under MPH, speed starts with 0.6MPH.

Wireless Charging Function

Put your phone in the wireless charging area,and it can charge your phone.

Music Bluetooth Function

Once the product is powered on, a mobile phone or other Bluetooth audio device can connect to the built-in Bluetooth module for wireless music playback. The console will then play music from the connected device. Volume control is on the connected audio device. Please adjust the volume appropriately to avoid affecting sound quality and the internal audio circuit.

App Connection Instructions

This machine supports connection via Xterra, Kinomap, and Zwift APPs. Users can download and install the APPs on their devices and open the APPs to connect with Bluetooth enabled on their devices.

3.1 Xterra app connection

STEP1: Download XF Connect app and create an account
STEP2: Tap "+ Add Device" on the Home Page
STEP3: Find the device name “TF300” and pair.
STEP4: Equipment is added successfully under a “beep" sound

3.2 Kinomap app connection

STEP1: Download Kinomap app and create an account
STEP2: Go to the "Browse" page and tap the"Add Equipment Management"
STEP3: Tap the "+ Add new equipment" icon to add a new equipment
STEP4: Select "Treadmill" and the brand of XTERRA
STEP5: Select the model “TF300"in the list of detected equipment to pair
STEP6: Equipment is added successfully under a “beep" sound
STEP7: Go to Browse page to start your favorite workout

3.3 Zwift app connection

STEP1: Download Zwift app and create an account
STEP2: Select "RUN SPEED" option and tap to pair
STEP3: Select the paired devices "TF300" and click on the "OK" button
STEP4: Equipment is added successfully under a “beep” sound STEP5: Find related map to start your favorite workout

Note: Bluetooth can only be connected to one app at a time. To connect to another app, you must first exit the app you are currently connecting to.

USING THE XF CONNECT APP

In order to help you achieve your exercise goals, your new exercise machine comes equipped with a Bluetooth® transceiver that will allow it to interact with selected phones or tablet computers via the XF Connect App. Just download the free XF Connect App from the Apple Store or Google Play, and then follow the instructions in the App to sync with your exercise machine.

Press the "DISPLAY" button from the APP to view the display of the current workout data. When your exercise is complete, choose "END & SAVE WORKOUT" to store the workout data.

1. Download the App by scanning the QR code on the right.
2. Open the App on your device (phone or tablet) and make sure Bluetooth® is enabled on your device (phone or tablet).
3. In the App click the Bluetooth® icon to search for your XF Connect equipment.
4. Under the Bluetooth® scan result list, select the machine for connect. When the App and equipment are synced, the Bluetooth® icon on the equipment's console display will light up. Click "DISPLAY", you may now start using your XF Connect App.
5. When your exercise is complete, choose "END & SAVE WORKOUT" to store the workout data. You will be prompted to sync your data with each available fitness cloud site. Please note, you will have to download the applicable compatible fitness App, such as Strava, MapMyFitness, Fitbit, etc., in order for the icon to be active and available.

Note: Your device will need to be running on a minimum operating system of IOS 13.1 or Android 8.0 for the XF Connect App to operate properly.



HEART RATE EXERTION

The old motto, “no pain, no gain”, is a myth that has been overpowered by the benefits of exercising comfortably. A great deal of this success has been promoted by the use of heart rate monitors. With the proper use of a heart rate monitor, many people find that their usual choice of exercise intensity was either too high or too low and exercise is much more enjoyable by maintaining their heart rate in the desired benefit range.

To determine the benefit range in which you wish to train, you must first determine your Maximum Heart Rate. This can be accomplished by using the following formula: 220 minus your age. This will give you the Maximum Heart Rate (MHR) for someone of your age. To determine the effective heart rate range for specific goals you simply calculate a percentage of your MHR. Your Heart rate training zone is 50% to 90% of your maximum heart rate. 60% of your MHR is the recommended for burning fat while 80% is recommended for strengthening the cardio vascular system. This 60% to 80% is the zone to stay in for maximum benefit.

For someone who is 40 years old their target heart rate zone is calculated:
220 – 40 = 180 (maximum heart rate)
180 x .6 = 108 beats per minute (60% of maximum)
180 X .8 = 144 beats per minute (80% of maximum)
So for a 40 year old the training zone would be 108 to 144 beats per minute.

If you enter your age during programming the console will perform this calculation automatically. Entering your age is used for the Heart Rate programs. After calculating your MHR you can decide upon which goal you would like to pursue.

The two most popular reasons for, or goals, of exercise are cardiovascular fitness (training for the heart and lungs) and weight control. If your goal is cardiovascular fitness or if it is weight loss, it can be achieved by training at 80% or 60%, respectively, of your MHR on a schedule approved by your physician. Consult your physician before participating in any exercise program.

With this Spirit Fitness unit you may use the heart rate monitor feature without using the Heart Rate program. However, when using the heart rate monitor feature in conjunction with the Heart Rate programs, the machine will automatically adjust speed or incline to maintain the desired heart rate.

HEART RATE - PERCEIVED EXERTION

Heart rate is important but listening to your body also has a lot of advantages. There are more variables involved in how hard you should workout than just heart rate. Your stress level, physical health, emotional health, temperature, humidity, the time of day, the last time you ate and what you ate all contribute to the intensity at which you should workout. If you listen to your body it will tell you all of these things.

The rate of perceived exertion (RPE), also known as the Borg scale, was developed by Swedish physiologist G.A.V. Borg.
This scale rates exercise intensity from 6 to 20 depending upon how you feel or the perception of your effort.
The scale is as follows:

Rating Perception of Effort	
6	Minimal
7	Very, Very Light
8	Very, Very Light +
9	Very Light
10	Very Light +
11	Fairly Light
12	Comfortable
13	Somewhat Hard
14	Somewhat Hard +
15	Hard
16	Hard +
17	Very Hard
18	Very Hard +
19	Very, Very Hard
20	Maximal

You can get an approximate heart rate level for each rating by simply adding a zero to each rating. For example a rating of 12 will result in an approximate heart rate of 120 beats per minute. Your RPE will vary depending on the factors discussed earlier. If your body is strong and rested, you will feel strong and your pace will feel comfortable. When your body is in this condition, you are able to train harder and the RPE will support this. If you are feeling tired and sluggish, it is because your body needs a break. In this
condition, your pace will feel difficult. Again, this will show up in your RPE and you will train at the proper level for that day.

MAINTENANCE & CARE

Post-Workout Machine Care

1. Store your machine according to the folding instructions when not in use.
2. Use a slightly damp cloth to clean areas where sweat or oil made contact with the machine.
3. Use a microfiber cloth to clean the display and remove unwanted oils and other things that may damage the screen.
4. Avoid leaving paper or other small debris in the cupholders.

General Cleaning

Dirt, dust, and hair can block air inlets and accumulate on the running belt. Please vacuum underneath your unit on a monthly basis to prevent excess build-up of dirt that can get sucked up and get into the inner workings under the motor cover. Every other month, you should remove the motor cover and carefully vacuum out dirt and hair that may accumulate.

UNPLUG THE POWER CORD BEFORE THIS TASK.

Sanitizing Your XTERRA Fitness Equipment

- Unupholstered high-contact surfaces (hard plastics) can be sanitized using a 75% isopropyl alcohol solution and a clean, dry cloth. Spray surfaces to be sanitized, and use the dry cloth to wipe clean. Allow surfaces to dry before using.
- For upholstered or soft-plastic surfaces, use a conditioner after sanitizing. Be sure to follow the instructions provided by the conditioner manufacturer to ensure proper use of the conditioner.
- Alternatively, you can make your own spray by mixing the proper ratio of isopropyl alcohol and distilled water to reach a 75% solution.

General cleaning will help prolong the life and performance of your treadmill. Keep the unit clean and maintained by dusting the components on a regular basis. Clean both sides of the running belt to prevent dust from accumulating underneath the belt. Keep your running shoes clean so that dirt from your shoes does not wear out the running board and belt. Clean the surface of the running belt with a clean damp cloth.

To better maintain the treadmill and prolong its life it is suggested that the machine be powered off for 10 minutes every 2 hours and fully powered off whenever not in use.

A loose Running Belt will result in the runner sliding off when running, while too tight of a Running Belt will result in decrease to the motors performance and also create more friction between the roller and running belts. The most suitable tightness for the belts is pulled out 50-75mm from the Running Board.

Belt Adjustments

To better maintain the treadmill and prolong its life it is suggested that the machine be powered off for 10 minutes every 2 hours and fully powered off whenever not in use.

A loose Running Belt will result in the runner sliding off when running, while too tight of a Running Belt will result in decrease to the motors performance and also create more friction between the roller and running belts. The most suitable tightness for the belts is pulled out 50-75mm from the Running Board.

Place the treadmill on level ground and set it at 3-5MPH (6-8kph) to check if the Running Belt drifts.

1. If the Running Belt moves to the right, turn the adjusting bolt on the right side 1/4 turn clockwise, then turn the left adjustment bolt 1/4 turn anti-clockwise. If the belt does not move, repeat this step until it centers. Refer to figure A.

2. If the Running Belt moves to the left, turn the adjusting bolts on the left side 1/4 of a turn clockwise, then turn the right adjustment bolt 1/4 turn anti-clockwise. If the belt does not move, repeat this step until it centers. Refer to figure B.

3. Over time the Running Belt will loosen. To tighten the belt turn the Left & Right side adjustment bolts one full turn clockwise, check the tension of the belt. Continue this process until belt is at the correct tension. Make sure to adjust both sides equally to ensure correct belt alignment. Refer to figure C.

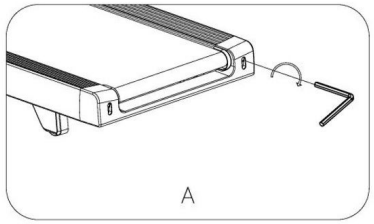

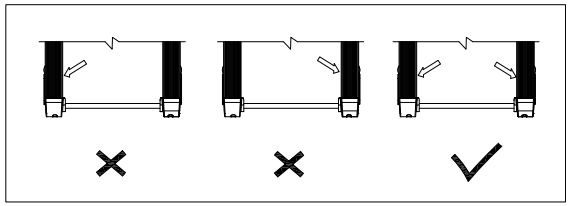

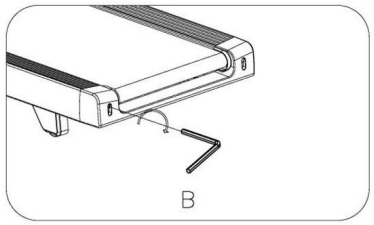

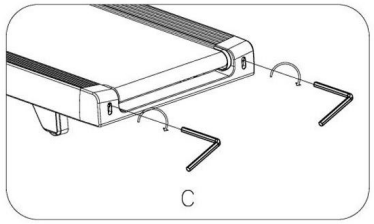

DO NOT OVERTIGHTEN – Over tightening will cause belt damage and premature bearing failure. If you tighten the belt a lot and it still slips, the problem could actually be the drive belt - located under the motor cover - that connects the motor to the front roller. If that belt is loose it feels similar to the walking belt being loose. Tightening the motor belt should be done by a trained service person.

DECK LUBRICATION

Lubrication Warning Function

Every 188 miles of operation, the console will emit a “Di-Di-Di” sound every 10 seconds and display “OIL”. This reminder indicates that the treadmill requires lubrication. Refer to the Maintenance Guide section of the manual for lubrication instructions. Apply the lubricant to the center area of the running board.

2. After adding lubricant, press and hold the “STOP” key for 3 seconds in standby mode to clear the lubrication reminder.

Always unplug the treadmill from the electrical outlet before cleaning, lubricating or repairing the unit.

Cleaning: Thorough cleaning will extend the life of the electric treadmill.

Regularly remove dust to keep components clean. Be sure to clean the exposed areas on both sides of the running belt. This will reduce the accumulation of debris underneath the running belt. Ensure your athletic shoes are clean to prevent foreign objects from being carried under the running belt, which may cause wear to the running deck and running belt. The surface of the running belt should be wiped with a soapy damp cloth. Be careful not to splash water onto electrical components or under the running belt.

WARNING: Be sure to unplug the electric treadmill's power cord before removing the motor cover. At least once a year, remove the motor cover and clean the motor with a vacuum cleaner.

Running Belt and Treadmill-Specific Lubricant

This electric treadmill comes with lubricant pre-applied between the running deck and the running belt. The friction between the running belt and the running deck significantly affects the service life and performance of the electric treadmill. Therefore, regular lubrication is required. We recommend periodically inspecting the deck surface. If the deck surface shows signs of damage, please contact our customer service center.

Extra tubes can be ordered directly from: www.Xterrafitness.com, or by calling our customer service department at (870)-336-4286.

Regularly check belt lubrication by completing the following steps:

1. Ensure that your machine is off, and that the power cord is unplugged to minimize risk of injury.
2. Reach between the running belt and the top of the treadmill base to verify that lubrication is present.

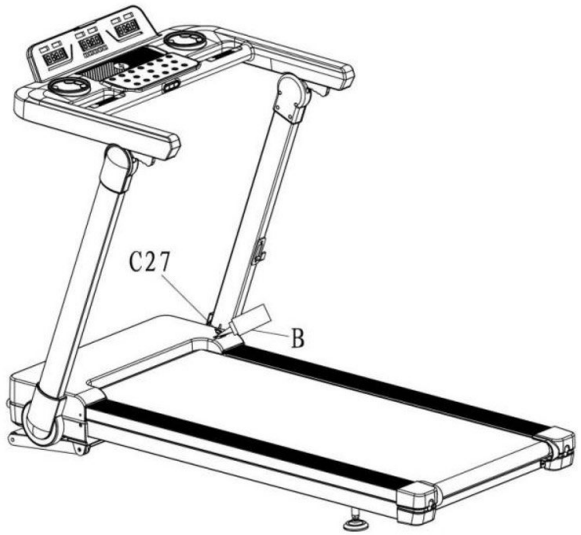

DECK LUBRICATION - CONTINUED

1. Raise the belt up on one side and apply lubricant to the running deck. Use a rag to thoroughly wipe the lubricant over the running deck. Repeat this process for the other side.
2. The moving parts should turn freely and quietly. Abnormality of moving parts will affect the safety of the equipment. Inspect and tighten bolts regularly.
3. To better maintain the treadmill and prolong its lifespan, it is suggested that maintenance be done on a regular basis.

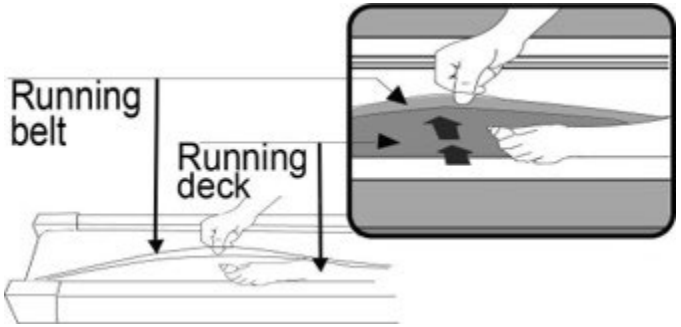

The following time table is recommended:

Light user (less than 3 hours/ week)	every six months
Medium user (3-5 hours/ week)	every three months
Heavy user (more than 5 hours/ week)	every two months

EXPLODED VIEW DIAGRAM

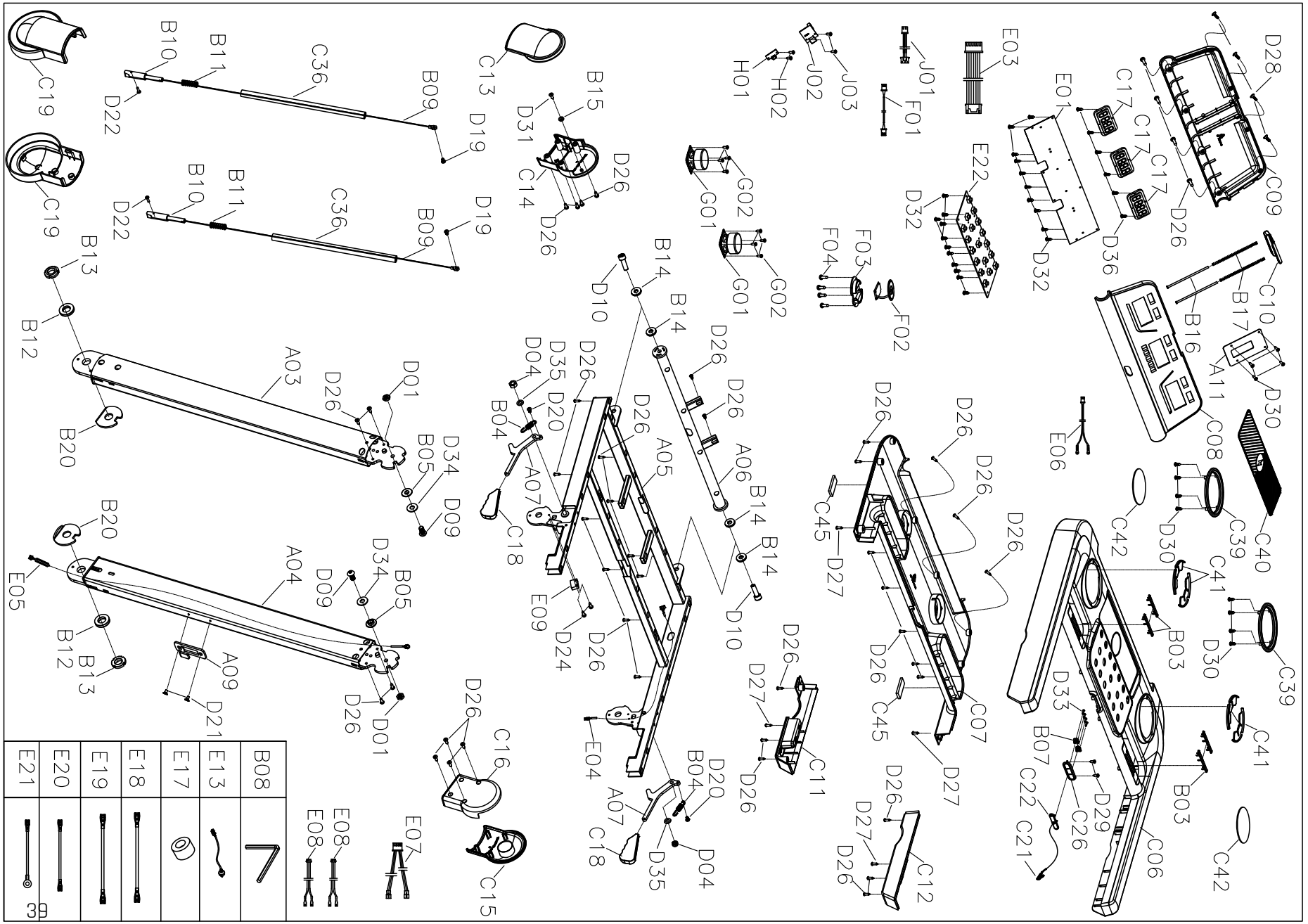

EXPLODED VIEW DIAGRAM

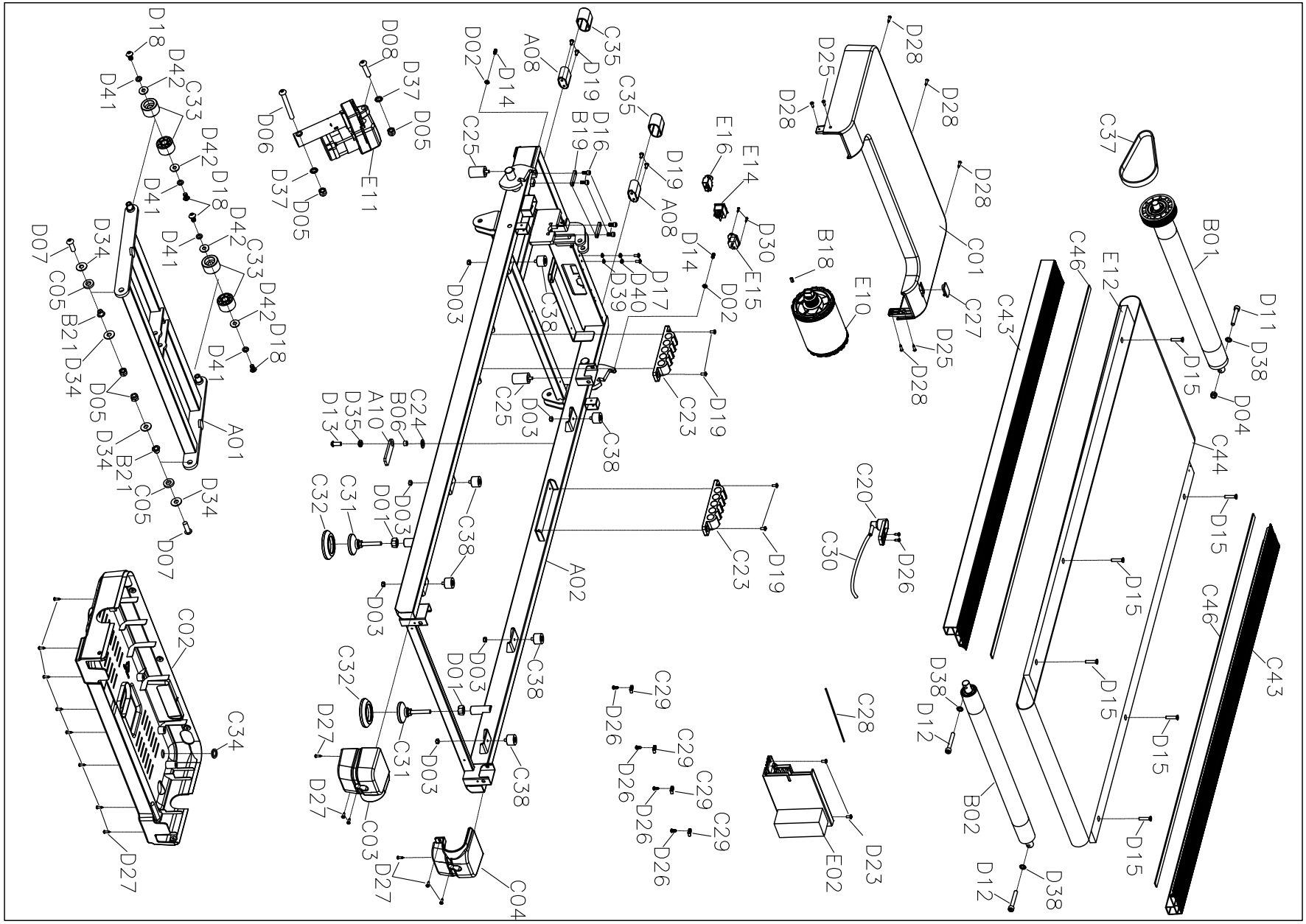

WARRANTY - RESIDENTIAL

Effective September 01, 2026- **TF300 Treadmill LIMITED WARRANTY**

XTERRA Fitness Inc. warrants all its home use treadmill parts for a period of time listed below, from the date of retail sale, as determined by a sales receipt. XTERRA Fitness's responsibilities include providing new or remanufactured parts, at XTERRA Fitness's option, and technical support to our independent dealers and servicing organizations. In the absence of a dealer or service organization, these warranties will be administered by XTERRA Fitness directly to a consumer. The warranty period applies to the following components:

Home Use Limited Warranty

Warranty	Frame	Motor	Parts	Labor
Residential	Lifetime	1 Year	90 Days	90 Days

RESPONSIBILITIES OF THE CONSUMER

This warranty applies only to products in ordinary household use, and the consumer/facility is responsible for the items listed below:

1. Proper use of the treadmill in accordance with the instructions provided in this manual
2. Proper installation in accordance with instructions provided with the treadmill and with all local electric codes.
3. Expenses for making the treadmill accessible for servicing, including any item that was not part of the treadmill at the time it was shipped from the factory.
4. Damages to the treadmill finish during shipping, installation or following installation.
5. Routine maintenance of this unit as specified in this manual.

WARRANTY - CONTINUED

What is not covered?

EXCLUSIONS

This warranty does not cover the following:

1. CONSEQUENTIAL, COLLATERAL, OR INCIDENTAL DAMAGES SUCH AS PROPERTY DAMAGE AND INCIDENTAL EXPENSES RESULTING FROM ANY BREACH OF THIS WRITTEN OR ANY IMPLIED WARRANTY.
   Note: Some states do not allow the exclusion or limitation of incidental or consequential damages, so this limitation or exclusion may not apply to you.
2. Service call reimbursement to the consumer. Service call reimbursement to the dealer that does not involve malfunction or defects in workmanship or material, for units that are beyond the warranty period, for units that are beyond the service call reimbursement period, for treadmill not requiring component replacement, or treadmill not in ordinary household or light commercial use.
3. Damages caused by services performed by persons other than authorized XTERRA Fitness service companies; use of parts other than original XTERRA Fitness parts; or external causes such as corrosion, discoloration of paint or plastic, alterations, modifications, abuse, misuse, accident, improper maintenance, inadequate power supply, or acts of God.
4. Products with original serial numbers that have been removed or altered.
5. Products that have been: sold, transferred, bartered, or given to a third party.
6. XTERRA Fitness reserves the right to request proof of purchase if no warranty record exists for the product.
7. THIS WARRANTY IS EXPRESSLY IN LIEU OF ALL OTHER WARRANTIES EXPRESSED OR IMPLIED, INCLUDING THE WARRANTIES OF MERCHANTABILITY AND/OR FITNESS FOR A PARTICULAR PURPOSE.
8. Product use in any environment other than a residential setting or non-dues paying facility with 5 hours use or less per day.
9. Warranties outside of the United States may vary. Please contact your local dealer for details.

Product features or specifications as described or illustrated are subject to change without notice. All warranties are made by XTERRA Fitness, Inc. This warranty applies only in the 48 contiguous United States. NOTE: This does not include Alaska or Hawaii.

WARRANTY - CONTINUED

Responsibilities of the Owner

SERVICE

Keep your bill of sale. 90 days from the date on the bill of sale establishes the labor warranty period should service be required. If service is performed, it is in your best interest to obtain and keep all receipts. This written warranty gives you specific legal rights. You may also have other rights that vary from state to state. Service under this warranty must be obtained by following these steps, in order:

1. Contact your selling authorized XTERRA Fitness dealer. OR
2. Contact your local authorized XTERRA Fitness service organization.
3. If there is a question as to where to obtain service, contact our service department at (870) 336-4286.
4. XTERRA Fitness' obligation under this warranty is limited to repairing or replacing, at XTERRA Fitness' option, the product through one of our authorized service centers. All repairs must be preauthorized by XTERRA Fitness. If the product is shipped to a service center freight charges to and from the service center will be the customer's responsibility. For replacement parts shipped while the product is under warranty, the customer will be responsible for shipping and handling charges. For in-home service, the customer will be responsible for a trip charge. There will be an additional trip charge if the customer is located over 100 miles from the nearest service center.
5. The owner is responsible for adequate packaging upon return to XTERRA Fitness. XTERRA Fitness is not responsible for damages in shipping. Make all freight damage claims with the appropriate freight carrier. DO NOT SHIP ANY UNIT TO OUR FACTORY WITHOUT A RETURN AUTHORIZATION NUMBER. All units arriving without a return authorization number will be refused.

For any further information, or to contact our service department by mail, send your correspondence to:

XTERRA Fitness, Inc.

P.O. Box 2037

Jonesboro, AR 72402-2037

Product features or specifications as described or illustrated are subject to change without notice. All warranties are made by XTERRA Fitness, Inc. This warranty applies only in the 48 contiguous United States. NOTE: This does not apply to Alaska or Hawaii.

TROUBLESHOOTING

PROBLEM	POSSIBLE CAUSE	SUGGESTED ACTION
E01 - Communication fault (driver did not receive console signal); E15 - Communication fault (console did not receive driver signal)	A: Console signal cable not properly connected or poor contact	Reconnect the cable
	B: Console signal cable damaged (short circuit or open circuit)	Replace the signal cable
	C: Console signal circuit fault	Replace the console
	D: Driver signal circuit fault	Replace control board
E03 - No speed sensor signal (for drivers with speed sensing)	A: Speed signal cable not properly connected, or Hall sensor damaged (if equipped)	Reconnect speed signal cable, or replace Hall sensor
	B: Driver sensing circuit faulty	Replace control board
E04 - Incline self-test learning failure (for drivers with incline)	A: Incline motor cable or signal cable not properly connected	Check wiring for errors, reconnect cables
	B: Incline motor faulty	Replace the incline motor
	C: Driver faulty	Replace control board
E05 - Overvoltage fault	Input voltage too high	Check input power supply

TROUBLESHOOTING - CONTINUED

PROBLEM	POSSIBLE CAUSE	SUGGESTED ACTION
E07 - Overloading fault	A: Overloading triggered over currency protection	Please restart the machine
	B: The treadmill is stuck and therefore the motor is unable to rotate properly	Please clear any obstructions, ensure the treadmill is properly adjusted, lubricate the running belt and restart the machine.
	C: Motor faulty	Replace the motor
E18 - Driver faulty	Driver faulty	Replace control board
E20 - Under voltage fault	Input voltage too low	Check input power supply

3000 Nestle Road Jonesboro, AR 72401 | Phone: (870) 336-4286 | Fax: 870-935-7611 | questions@xterrafitness.com

©2026 All Rights Reserved.