XTERRA FITNESS



TR**6.6** TREADMILL
OWNER'S MANUAL

PLEASE CAREFULLY READ THIS ENTIRE MANUAL BEFORE OPERATING YOUR NEW TREADMILL

Table Of Contents

Product Registration **1**

Important Safety Instructions **2**

Important Electrical Instructions **3**

Important Operation Instructions **4**

TR6.6 Assembly Instructions **6**

Operation of Your Console **11**

Programmable Features **15**

Heart Rate **20**

General Maintenance **24**

Manufacturer's Limited Warranty **29**

ATTENTION

THIS TREADMILL IS INTENDED FOR **RESIDENTIAL USE ONLY** AND IS WARRANTED FOR THE APPLICATION. ANY OTHER APPLICATION **VOIDS** THIS WARRANTY IN ITS ENTIRETY.

Preventative Maintenance Chart

Vacuum Under Motor Cover & Check Wiring (Every Other Month)	Clean & Inspect Deck for Lubrication (Every Other Month)	Lubricate Deck (Every 90 hours or sooner if dry)	Inspect Belt Tracking (Monthly) Adjust if necessary	Date

Congratulations On Your New Treadmill and Welcome to the XTERRA Fitness Family!

Thank you for your purchase of this quality treadmill from **XTERRA Fitness**. Your new treadmill has been manufactured by one of the leading fitness manufacturers in the world and is backed by one of the most comprehensive warranties available. **XTERRA Fitness** will do all we can to make your ownership experience as pleasant as possible for many years to come. If you have questions, or if parts are missing or damaged, or you require customer service, call (870) 336-4286. Please have your model number and serial number handy when you call.

Please take a moment to record where you purchased your machine, as well as the date of purchase for future reference. We appreciate your confidence in **XTERRA Fitness** and we will always remember that you are the reason that we are in business. Please complete and mail your registration card today and enjoy your new treadmill.

Yours in Health,
XTERRA Fitness

Purchase Location _____

Purchase Date _____

Product Registration

Record Your Serial Number
Please record the Serial Number of this fitness product in the space provided below.

Serial Number _____

Register Your Purchase
The self-addressed product registration card must be completed in full and returned to **XTERRA Fitness**. You can also go to ***www.xterrafitness.com/warranty*** to register on-line.

Power

This product uses an external power supply. The power supply must first be plugged into the power jack on the unit. Next, plug the power supply into the appropriate wall outlet. When not in use, it is recommended to unplug the power supply from the wall outlet.

IMPORTANT: If the product has been exposed to cold temperatures, allow the product sit in room temperature to warm up before plugging in the power supply. Failure to do so may result in damage to the display or electronic components.

IMPORTANT: Do not operate the product if the power supply, its plug, or its cord has been damaged.

Important Safety Instructions

When using an electrical appliance, basic precautions should always be followed, including the following:

Read all instructions before using this appliance.

DANGER - To reduce the risk of electric shock:

1. Always unplug this appliance from the electrical outlet immediately after using and before cleaning.

WARNING - To reduce the risk of burns, fire, electric shock, or injury to persons:

1. An appliance should never be left unattended when plugged in. Unplug from outlet when not in use, and before putting on or taking off parts.
2. Do not operate under blanket or pillow. Excessive heating can occur and cause fire, electric shock, or injury to persons.
3. This exercise equipment is not intended for use by persons with reduced physical, sensory or mental capabilities, or lack of experience and knowledge.
4. Use this appliance only for its intended use as described in this manual. Do not use attachments not recommended by the manufacturer.
5. Never operate this appliance if it has a damaged cord or plug, if it is not working properly, if it has been dropped or damaged, or dropped into water. Return the appliance to a service center for examination and repair.
6. Do not carry this appliance by supply cord or use cord as a handle.
7. Keep the cord away from heated surfaces.
8. Never operate the appliance with the air openings blocked. Keep the air openings free of lint, hair, and the like.
9. Never drop or insert any object into any opening.
10. Do not use outdoors.
11. Do not operate where aerosol (spray) products are being used or where oxygen is being administered.
12. Connect this appliance to a properly grounded outlet only.
13. The appliance is intended for household use.

WARNING - To reduce the risk of burns, fire, electric shock, or injury to persons, install the treadmill on a flat level surface with access to a 120-volt, 15-amp grounded outlet.

DO NOT USE AN EXTENSION CORD UNLESS IT IS 14AWG OR BETTER, WITH ONLY ONE OUTLET ON THE END. THE TREADMILL SHOULD BE THE ONLY APPLIANCE IN THE CIRCUIT IN WHICH IT IS CONNECTED. DO NOT ATTEMPT TO DISABLE THE GROUNDED PLUG BY USING IMPROPER ADAPTERS, OR IN ANY WAY MODIFY THE CORD SET. A SERIOUS SHOCK OR FIRE HAZARD MAY RESULT ALONG WITH COMPUTER MALFUNCTIONS.



WARNING: This product can expose you to chemicals including Toluene and Acrylamide which are known to the State of California to cause cancer and birth defects or other reproductive harm.
For more information go to www.P65Warnings.ca.gov

Fitness Equipment Safety Instructions

- To disconnect, turn all controls to the off position, remove tether cord, then remove the plug from the outlet.
- Do not operate equipment on deeply padded, plush or shag carpet. Damage to both carpet and equipment may result.
- Before beginning this or any exercise program, consult a physician. This is especially important for persons over the age of 35 or persons with pre-existing health conditions.
- Do not block the rear of the equipment. Provide a minimum of 3 1/2 feet clearance between the rear of the equipment and any fixed object.
- Keep hands away from all moving parts.
- Use handrails provided; they are for your safety.
- The pulse sensors are not medical devices. Various factors, including the user's movement, may affect the accuracy of heart rate readings. The pulse sensors are intended only as exercise aids in determining heart rate trends in general.

- Do not attempt to use your equipment for any purpose other than for the purpose it is intended.
- Wear proper shoes. High heels, dress shoes, sandals or bare feet are not suitable for use on your equipment. Quality athletic shoes are recommended to avoid leg fatigue.

Failure to follow all guidelines may compromise the effectiveness of the exercise experience, expose yourself (and possibly others) to injury, and reduce the longevity of the equipment.

SAVE THESE INSTRUCTIONS - THINK SAFETY!

Important Electrical Information

WARNING!

Route the power cord away from any moving part of the treadmill including the elevation mechanism and transport wheels.

NEVER remove any cover without first disconnecting AC power. If voltage varies by ten percent (10%) or more, the performance of your treadmill may be affected. **Such conditions are not covered under your warranty.** If you suspect the voltage is low, contact your local power company or a licensed electrician for proper testing.

NEVER expose this treadmill to rain or moisture. This product is **NOT** designed for use outdoors, near a pool or spa, or in any other high humidity environment. The temperature specification is 40 degrees C, and humidity is 95%, non-condensing (no water drops forming on surfaces).

Circuit breakers: Avoid AFCI/GFCI circuit breakers if possible. These breakers may trip occasionally during exercise because of the high inrush currents of the treadmill drive electronics and motor. This is an issue that affects all treadmill brands. New laws in your area may require these breakers. If you do have these breakers and outlets in your home, and are experiencing nuisance tripping, you should check if there are any other devices plugged into the same circuit. Some examples of devices that may also cause tripping are fluorescent lights with electronic ballasts, coffee maker, space heater, hair drier. Optimally the treadmill should be the only device plugged into the circuit. Our treadmills have surge suppressors built in to help avoid nuisance tripping. We have tested several AFCI/GFCI breakers and outlets with our products. Brands we have tested are: Eaton (Cutler Hammer Series), Leviton (Smart lock pro) and Schneider Electric (Canadian home series). These breakers do not trip in our testing, when connected to our treadmills, as long as no other devices are plugged into the same circuit.

Grounding Instructions

This product must be grounded. If the treadmill's electrical system should malfunction or breakdown grounding provides a path of least resistance for electric current, reducing the risk of electric shock. This product is equipped with a cord having an equipment-grounding plug. The plug must be plugged into an appropriate outlet that is properly installed and grounded in accordance with all local codes and ordinances.

***DANGER** - Improper connection of the equipment-grounding conductor can result in a risk of electric shock. Check with a qualified electrician or serviceman if you are in doubt as to whether the product is properly grounded. Do not modify the plug provided with the product if it will not fit the outlet; have a proper outlet installed by a qualified electrician.*

This product is for use on a nominal 120-volt circuit, and has a grounding plug that looks like the plug illustrated below. A temporary adapter that looks like the adapter illustrated below may be used to connect this plug to a 2-pole receptacle as shown below if a properly grounded outlet is not available. The temporary adapter should be used only until a properly grounded outlet, (shown below) can be installed by a qualified electrician. The green colored rigid ear-lug, or the like, extending from the adapter, must be connected to a permanent ground such as a properly grounded outlet box cover. Whenever the adapter is used, it must be held in place by a metal screw.

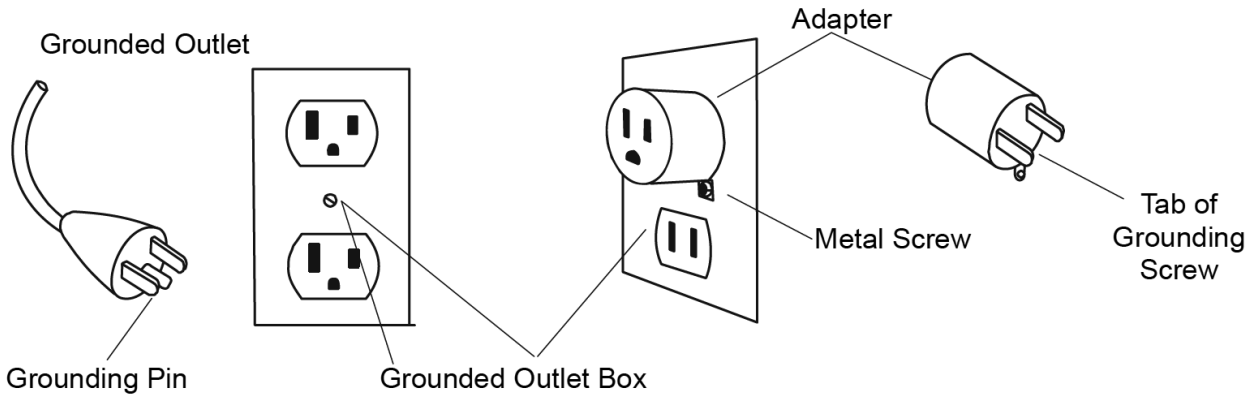

Important Operation Instructions

- **NEVER** operate this treadmill without reading and completely understanding the results of any operational change you request from the computer.
- Understand that changes in speed and incline do not occur immediately. Set your desired speed on the computer console and release the adjustment key. The computer will obey the command gradually.
- **NEVER** use your treadmill during an electrical storm. Surges may occur in your household power supply that could damage treadmill components.
- Use caution while participating in other activities while walking on your treadmill; such as watching television, reading, etc. These distractions may cause you to lose balance or stray from walking in the center of the belt, which may result in serious injury.
- **NEVER** mount or dismount the treadmill while the belt is moving. XTERRA Fitness treadmills start with at a very low speed and it is unnecessary to straddle the belt during start up. Simply standing on the belt during slow acceleration is proper after you have learned to operate the unit.
- **ALWAYS** hold on to a handrail or hand bar while making control changes (incline, speed, etc.).

Safety Tether Cord

A safety tether cord is provided with this unit. It is a simple magnetic design that should be used at all times. It is for your safety should you fall or move too far back on the tread-belt. Pulling this safety tether cord will stop tread-belt movement.

To Use:

1. Place the magnet into position on the round portion of the console control head. Your treadmill will not start and operate without this. Removing the magnet also secures the treadmill from unauthorized use.
2. Fasten the plastic clip onto your clothing securely to assure good holding power. ***Note***: The magnet has strong enough power to minimize accidental, unexpected stopping. The clip should be attached securely to make certain it does not come off. Be familiar with its function and limitations. The treadmill will stop, depending on speed, with a one to two step coast anytime the magnet is pulled off the console.

Remove tether cord after use to prevent unauthorized treadmill operation.

TR**6.6** Assembly Pack Checklist

Hardware Step 3

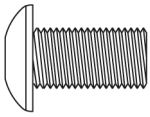

#93. 5/16” x 15mm
Button Head Socket
Bolt (8 pcs)

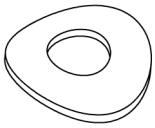

#94. 5/16”
Curved Washer
(2 pcs)

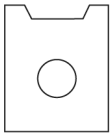

#132. M5
Speed Nut Clips
(4 pcs)

Hardware Step 5

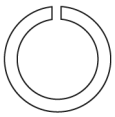

148.. Ø8mm x 1.5T
Split Washer
(4 pcs)

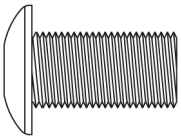

#90. 5/16” x 3/4”
Button Head Socket Bolt
(4 pcs)

Hardware Step 6

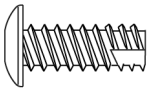

#88. 5 x 16mm
Tapping Screw
(4 pcs)

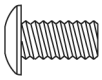

#95. M5 x 10mm
Phillips Head Screw
(2 pcs)

Assembly Tools

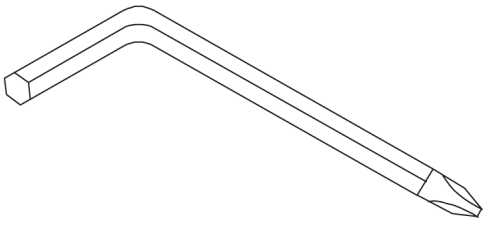

#96. Combination M5 Allen
Wrench & Phillips Head
Screw Driver

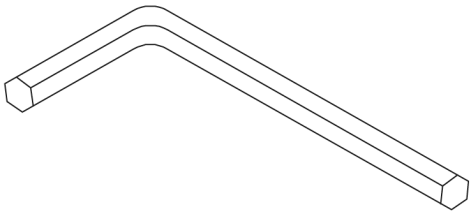

#97. M6 L Allen Wrench

TR**6.6** Assembly Instructions

1 Main Base Frame

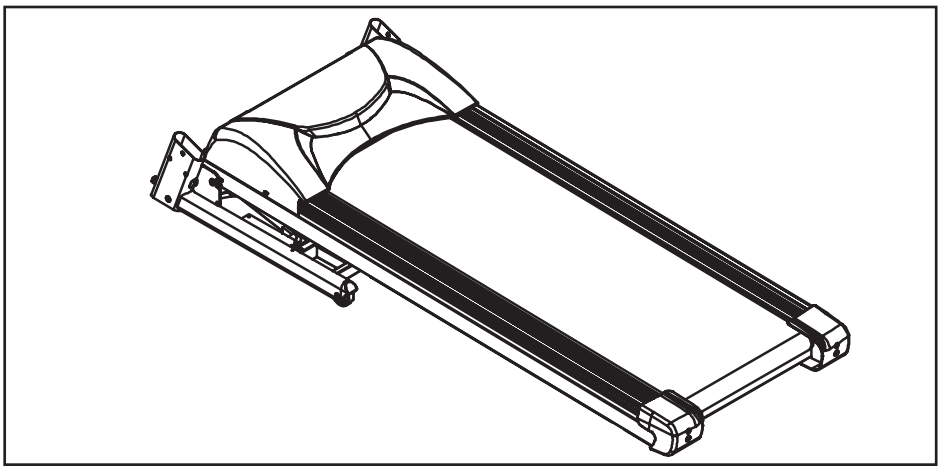

1. Remove all the parts from the carton and lay the Main Base Frame on a flat level surface.

2 Covers & Cables

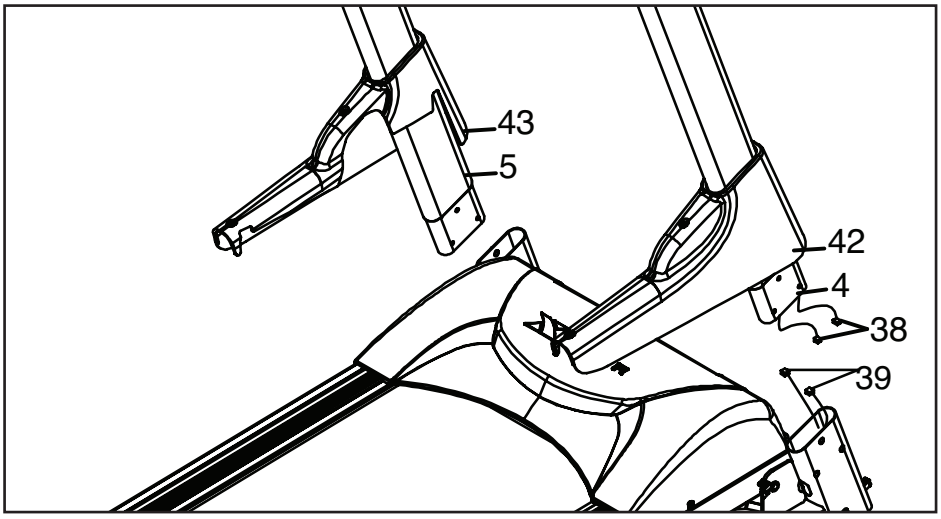

1. Slide the plastic covers (R-**42** & L-**43**) over the Left and Right Console Mast Upright Tube.
2. Connect the Upper Cable (**38**) to the Lower Cable (**39**).

3 Upright Tubes

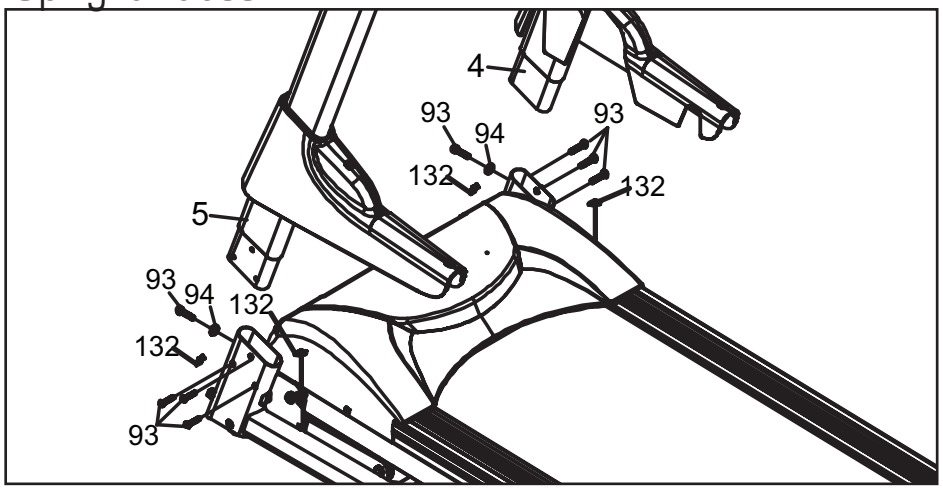

Hardware Step 3

#93. 5/16” x 15mm Button Head Socket Bolt (8 pcs)

#94. 5/16” Curved Washer (2 pcs)

#132. M5 Speed Nut Clips (4 pcs)

1. Attach and center a Speed Nut Clip (**132**) over the open hole of base frame.
2. Slide the Right Console Mast Tube (**4**) into the Base Frame. Gently pull up the Computer Cable that exits the top of the tube as you slide it in to prevent pinching the cable. If the cable is pinched and partially severed, the treadmill’s electrical system won’t function properly. Repeat the process on the left side (you don’t have to worry about a cable on this side).
3. Partially tighten all six Button Head Bolts (**93**) that are inserted from the sides, and two Curved Washers (**94**) and two Button Head Bolts (**93**) from the front with the Combination Allen Head Wrench & Phillips Head Screw driver (**96**). Don’t fully tighten these until the Console is attached.

4 Cables

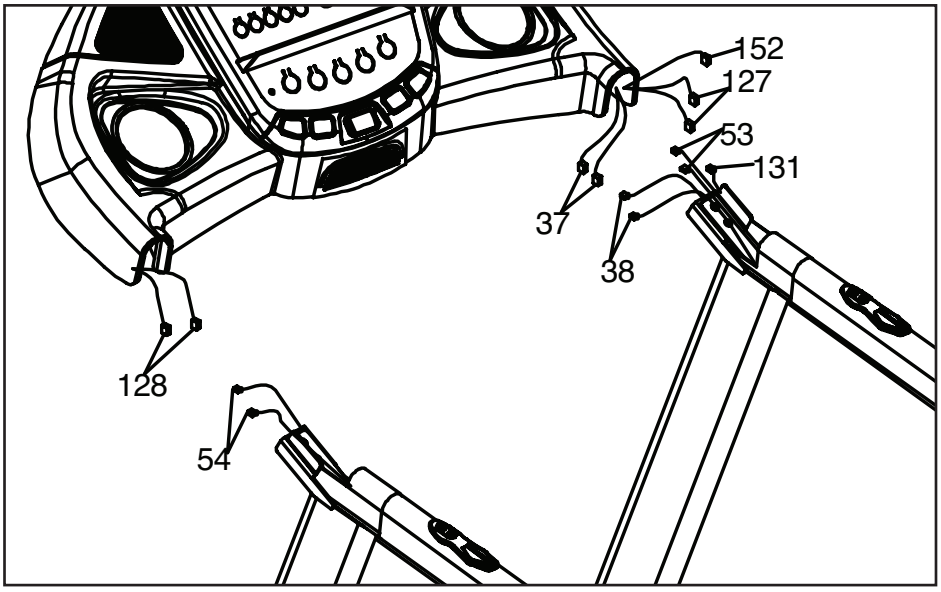

1. This step is easier if you have someone else helping to hold the console while you connect the wires. Connect the computer cable (**38**) to the mating connector (**37**) of the console.
2. Connect the cables (**127**) to mating cables (**53**) on the right side.
3. Connect the cable (**152**) to the mating cable (**131**).
4. Connect the cables (**128**) to mating cables (**54**).

5 Console Assembly

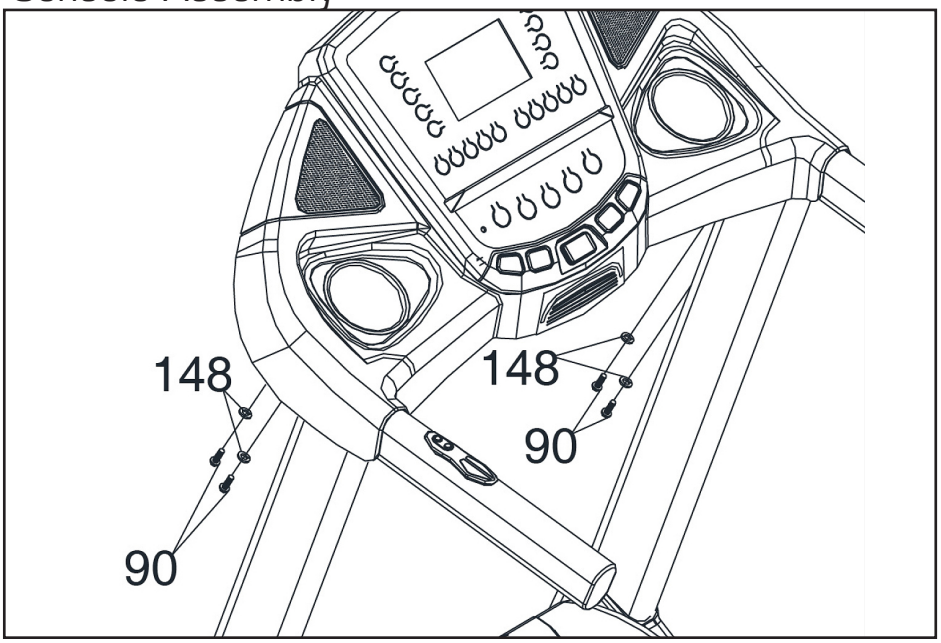

Hardware Step 5

#148. Ø8mm x 1.5T Split Washer (4 pcs)
#90. 3/8" x 3/4" Button Head Socket Bolt (4 pcs)

1. To attach the console, insert four Washers (**148**) and four Button Head Socket Bolts (**90**) underneath the console. Tighten using the Combination Allen Wrench & Phillips Head Screw Driver (**96**).

6 Covers

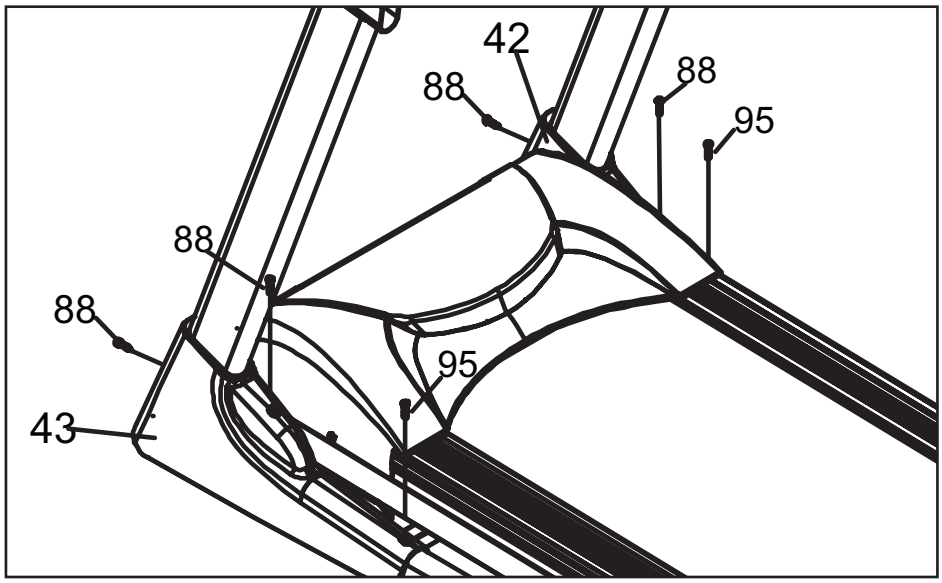

Hardware Step 6

#88. 5 x 16mm Tapping Screw (4 pcs)
#95. M5 x 10mm Phillips Head Screw (2 pcs)

1. Go back and fully tighten the six Button Head Bolts that connect the Left and Right Console Mast Tubes to the Base Frame using the Combination Allen Wrench & Phillips Head Screwdriver (**96**).
2. Attach the Console Mast Covers to the Upright Tubes (**42** & **43**) with four Tapping Screws (**88**) & two Phillips Head Screws (**95**). Tighten using the Combination Allen Wrench & Phillips Head Screw Driver (**96**).

CAUTION: Do not attempt to move the unit unless it is in the folded and locked position. Remove the power cord from the front of the unit to avoid possible damage. Use both handrails to maneuver the unit to the desired position.

Folding Instructions

- TO FOLD THE TREADMILL
  Make certain the treadmill is at minimum incline. Lift the treadmill running deck until it is secured by the locking telescoping tube assembly on the right side of the base. You will hear it pop into place when secure.
- TO UNFOLD THE TREADMILL
  Apply slight forward pressure* on the treadmill running deck with your left hand. Pull out on the round knob and slowly lower the running deck to the floor. The deck will lower unassisted when it reaches about waist high.
  *At the rear roller area to relieve pressure on the locking system.

Transportation Instructions

The treadmill is equipped with four transport wheels that are engaged when the treadmill is folded. After folding simply roll the treadmill away.

Operation of Your Treadmill

TR**6.6** Console



Getting Started

Power the treadmill on by plugging it into an appropriate wall outlet, then turn on the power switch located at the front of the treadmill below the motor hood. Ensure that the safety key is installed, as the treadmill will not operate without it.



When the power is turned on, a message will scroll across the dot matrix showing the current software version. The treadmill will then enter idle mode, which is the starting point for operation.

Quick-Start Operation

1. Attach the Safety key to enable the display (if not already on).
2. Press the **Start** key to begin belt movement. Adjust to the desired speed using the **Speed** ▲/▼ keys (console or handgrip). You may also use the **Speed** keys **2** through **10** to adjust the speed.
3. To slow tread-belt press and hold the **Speed** ▼ key (console or handgrip) to the desired speed. You may also press the **Speed** keys **2** through **10**.
4. To stop the tread-belt press the **Stop** key or pull away Safety key.

Pause/Stop/Reset Feature

1. When the treadmill is running the pause feature may be utilized by pressing the red **Stop** key once. This will slowly decelerate the tread-belt to a stop. The incline will go to zero percent. The Time, Distance and Calorie readings will hold while the unit is in the pause mode. After 5 minutes the display will reset and return to the start up screen.
2. To resume your exercise, when in Pause mode, press the **Start** key. The speed and incline will return to their previous settings.
   - Pause is executed when the **Stop** key is pressed once. If the **Stop** key is pressed a second time, the program will end and a workout summary will be displayed. If the **Stop** key is pressed a third time, the console will return to the idle mode (start up) screen. If the **Stop** key is held down for more than three seconds the console will reset.

Incline Feature

- Incline may be adjusted anytime after belt movement.
- Press and hold the **Incline** ▲/▼ keys on the left hand side (console or handgrip) to achieve desired level of effort. You may also choose a quicker incline change by using the **Incline** keys on the left side of the console.
- The display will indicate incline position as adjustments are made.

Dot Matrix Center Display (Program Operation)

The dot matrix display is 18 columns wide by 8 rows high. The columns represent the segments of your workout. The rows give a visual picture of the intensity level, but do not necessarily indicate a specific value. In operation the Speed / Incline dot matrix window will build a profile “picture” as values are changed during a workout.

When the Speed indicator (which is above dot matrix) is lit the dot matrix displays the Speed profile and when the Incline indicator is lit the dot matrix displays the Incline profile. You may change the dot matrix profile view that you desire by pressing the **Display** key.

The **Display** key allows you to change views between the Incline profile, the Speed profile, and Incline + Speed. After using the **Display** key to completely scroll through these options, the console will automatically scroll through the options showing each option for five seconds.

1/4 Mile Track

The 1/4-mile track will be displayed around the dot matrix window. The flashing dot indicates your progress. Once the 1/4-mile is complete the next lap will begin. The number of completed laps is displayed in the Laps window.

Pulse Grip Feature

The Pulse (Heart Rate) readout will display your current heart rate in beats per minute during the workout. You must use both stainless steel sensors on the side hand rails to display your pulse. Pulse value displays anytime the upper display is receiving a Pulse signal. You can also monitor your pulse by using the included telemetric chest strap.

Calorie Display

Displays the cumulative calories burned at any given time during your workout.
Note: This is only a rough guide used for comparison of different exercise sessions, which cannot be used for medical purposes.

To Turn Treadmill Off

1. Display will automatically turn off (go to sleep) after 30 minutes (no key operations). The treadmill will draw very little current in sleep mode (about as much as your television when it is turned off).
2. Remove tether cord.
3. Turn of the main switch on the front of the treadmill, below the motor cover.

Attention
Your new console comes configured in an in-store 'Display Mode' of operation, where the console will remain powered on unless the main power switch is turned off. To exit the display mode, for normal operation, press and hold the **Stop**, **Enter** and **Display** keys for 5 seconds; the display will show: Display mode - On. Use the **Incline** ▲/▼ key or the **Speed** ▲/▼ key to change the setting to Off then press **Enter**.

Preset Program Profiles

Ascent - Work

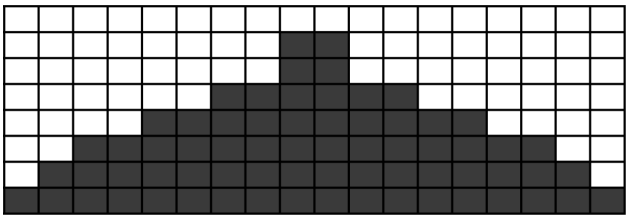

Ascent - Incline

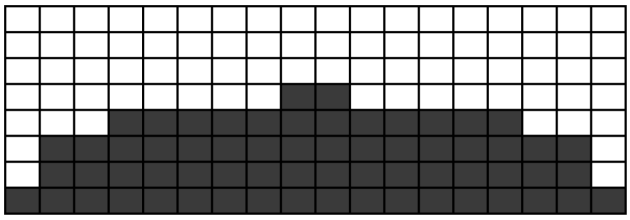

Glute Blast - Work

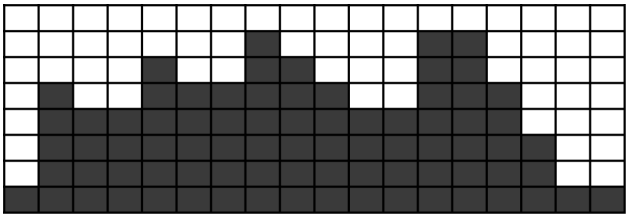

Glute Blast - Incline

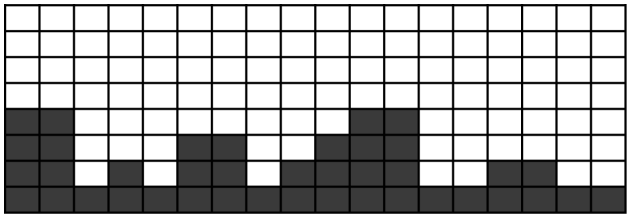

Adventure - Work

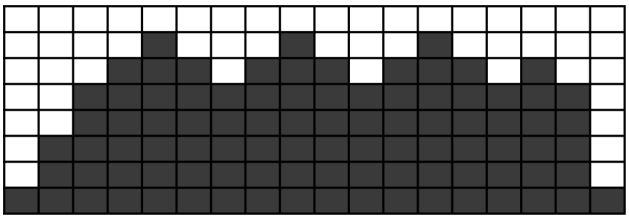

Adventure - Incline

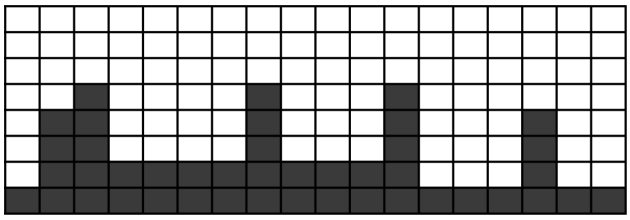

Xtreme - Work

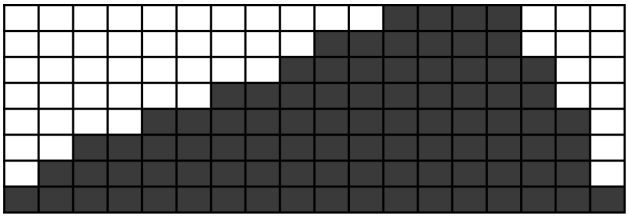

Xtreme - Incline

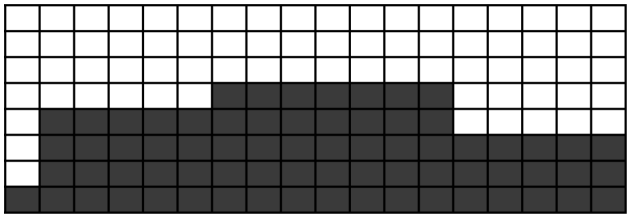

Interval - Work

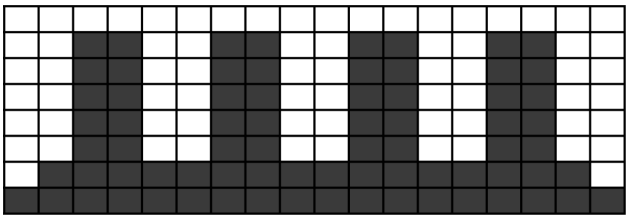

Interval - Incline

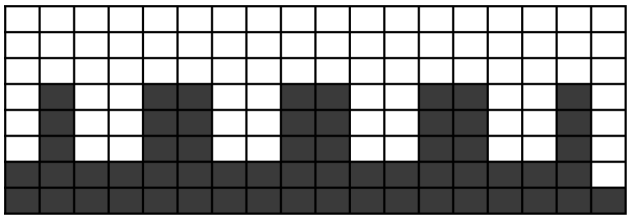

X Country - Work

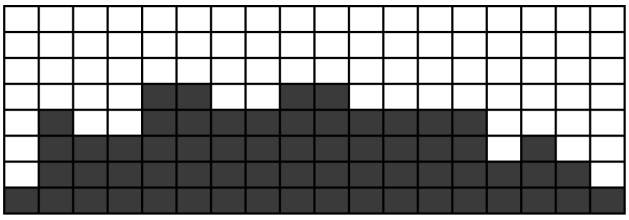

X Country - Incline

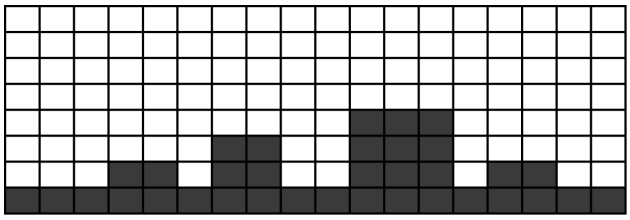

Programmable Features

The TR6.6 Treadmill has six factory preset programs, three user defined programs, two heart rate programs and one manual program.

To Select and Start a Preset Program

1. Press the desired program key. Press **Enter** to select the program. The display will prompt you through the programming or you can just press **Start** to begin the program with default values.
2. If **Enter** was pressed, the Display will now be blinking a value, indicating your Age (default is 35). Entering your correct age affects the heart rate Bar Graph Display and the Heart Rate programs. Use the ▲/▼ keys to adjust, then press **Enter**. (Note: You may press **Start** at any time during the programming to start the program.)
3. The Display will now be blinking a value, indicating your Body Weight (default is 150 lbs.). Entering the correct body weight will affect the calorie count. Use the ▲/▼ keys to adjust, then press **Enter**.
   A note about the Calorie display: No exercise machine can give you an exact calorie countbecause there are too many factors which determine exact calorie burn for a particular person. Even if someone is the exact same body weight, age and height, their calorie burn may be very different than yours. The Calorie display is to be used as a reference only to monitor improvement from workout to workout.
4. The Display will be blinking a value, indicating Time (the default value is 30 minutes). You may use any of the ▲/▼ keys to adjust the time. After adjusting, or to accept the default, press **Enter**. (Note: You may press **Start** at any time during the programming to start the program).
5. The Display will now be blinking the preset top speed of the selected program (3 mph or 5 kph). Use the **Speed** ▲/▼ keys to adjust, then press **Enter**. Each program has various speed changes throughout; this allows you to limit the highest speed the program can reach.
6. The Display will be blinking the preset top incline of the selected program (3.0%). Use the **Incline** ▲/▼ keys to adjust, then press **Enter**.

You are now done programming data and may press **Start** to begin your workout or **Enter** to go back one level to change data entered in the programming phase.

User Programs

1. Select User 1 or User 2 via the Program key then press **Enter**. Note that the dot matrix will show a single row of dots at the bottom of the display (Unless there is a previously stored program).
   If there is a program stored under the key that is pressed, it will be retrieved. If not, you have the option of programming in your first name. The Display will flash the letter "A" . To change it, press the ▲ key, then "B" will be displayed; if the ▼ key is pressed, the letter "Z" will be displayed. After selecting the appropriate letter, press enter. The letter "A" will again be displayed and blinking. Repeat the procedure until all letters of your first name are programmed (7 characters maximum). When your name is displayed, press Stop and it will be stored under either User 1 or User 2.
2. If **Enter** was pressed, the Display will now be blinking a value, indicating your Age (default is 35). Entering your correct age affects the heart rate Bar Graph Display and the Heart Rate programs. Use the ▲/▼ keys to adjust, then press **Enter**. (Note: You may press **Start** at any time during the programming to start the program.)
3. The Display will now be blinking a value, indicating your Body Weight (default is 150 lbs.). Entering the correct body weight will affect the calorie count. Use the ▲/▼ keys to adjust, then press **Enter**.
4. The Display will be blinking a value, indicating Time (the default value is 30 minutes). You may use any of the ▲/▼ keys to adjust the time. After adjusting, or to accept the default, press **Enter**. (Note: You may press **Start** at any time during the programming to start the program).
5. The Display will now be blinking the preset top speed of the selected program (0.5 mph or 0.8 kph). Use the **Speed** ▲/▼ keys to adjust, then press **Enter**. Each program has various speed changes throughout; this allows you to limit the highest speed the program can reach.
6. The Display will be blinking the preset top incline of the selected program (0%). Use the **Incline** ▲/▼ keys to adjust, then press **Enter**.

You are now done programming data and may press **Start** to begin your workout or **Enter** to go back one level to change data entered in the programming phase.

Fitness Program

1. Press the Fitness key. Press **Enter** to select the program. The display will prompt you through the programming.
2. If **Enter** was pressed, the Display will now be blinking a value, indicating your Age (default is 35). Entering your correct age affects the Heart Rate Bar Graph Display and the Heart Rate programs. Use the ▲/▼ keys to adjust, then press **Enter**. Your age determines your recommended maximum heart rate. Since the Bar Graph Display and the Heart Rate features are based on a percentage of your maximum heart rate, it is important to enter the correct age for these features to work properly.
3. The Display will now be blinking a value, indicating your Body Weight (default is 150 lbs.). Entering the correct body weight will affect the calorie count. Use the ▲/▼ keys to adjust, then press **Enter**.
   A note about the Calorie display: No exercise machine can give you an exact calorie count because there are too many factors which determine exact calorie burn for a particular person. Even if someone is the exact same body weight, age and height, their calorie burn may be very different than yours. The Calorie display is to be used as a reference only to monitor improvement from workout to workout. The calorie count displayed in this program is only an estimate because the machine can't calculate calories expended while strength training.
4. The Display will now be blinking the preset top speed of the selected program (3 mph or 5 kph). Use the ▲/▼ keys to adjust, then press **Enter**. Each program has various speed changes throughout; this allows you to limit the highest speed the program can reach.
5. The Display will be blinking the preset top incline of the selected program (1.0%). Use the **Incline** ▲/▼ keys to adjust, then press **Enter**.
6. The Display will be blinking the number of intervals desired (default is 10; you may select 10, 20, or 30). Use the ▲/▼ keys to adjust, then press **Enter**.
7. The Display will be blinking the desired Interval time (default is 1:00). The time you select will be the duration of both the cardio & strength intervals. Note: on average you will complete 15-20 repetitions of the strength exercise in a 0:30 interval. As a general rule, the longer the interval, the less weight (dumbbells) and speed (treadmill) required; use the ▲/▼ keys to adjust, then press **Enter**.
8. The Display will be blinking the desired recovery time you desire after completing both the cardio & strength intervals. Use the ▲/▼ keys to adjust, then press **Enter**

Program Example

- The user selects 10 intervals (5 cardio and 5 strength) with the following interval durations – length of each cardio & strength interval is 0:30, recovery interval is 1:00
- Program begins with a 3:00 warm up (1:00 @ 1mph, 1:00 @ 2mph, and 1:00 @ 3mph)
- 1st cardio interval begins, lasting 0:30; console counts down to 0:00 and the Display displays: "STRENGTH INTERVAL 1 BEGIN DUMBBELL ROW"
- User steps off of the treadmill to perform the strength exercise. The console counts down to 0:00 and beeps 3x signaling the user to get back on the treadmill.
- Console displays "PRESS START TO BEGIN RECOVERY"; user walks @ 2mph for 1:00
- Console then displays 2nd cardio interval and the process proceeds until the user has performed 5 cardio, strength, and recovery intervals; the 5 strength exercises will be performed sequentially as listed in this manual.
- The last 2:00 are a Cool Down phase with the user walking on the treadmill @ 2 mph

If 20 intervals was selected, you would perform each strength exercise twice, before moving on to the next exercise. If 30 intervals is selected, you will perform each exercise once, then repeat the sequence of all 5 exercises a 2nd & 3rd time.

CAUTION

Exercises that require dumbbell use - Select a pair of dumbbells that you will be able to safely and effectively maneuver over the strength interval time you have chosen.

Fitness Program - Strength Exercises

Dumbbell Bent Over Row

EMPHASIS:MID/UPPER BACK & FRONT OF ARMS

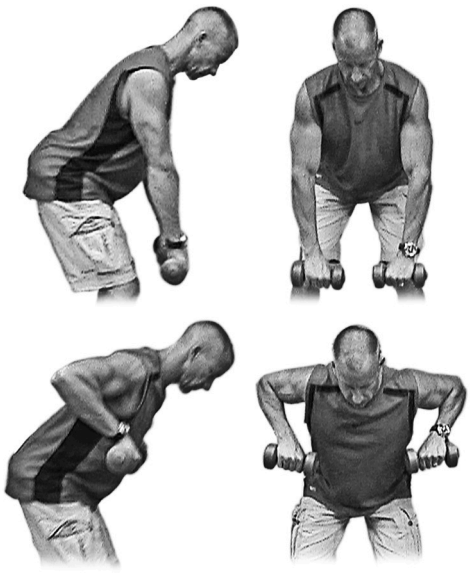

1. Grasp the dumbbells with an overhand grip and arms fully extended in front of thighs; feet are spaced shoulder width apart
2. Maintain a slightly arched lower back throughout the exercise (see side view)
3. Begin the exercise by drawing your elbows up and out until there is a 90˚ bend in your elbows
4. Slowly lower the dumbbells back to the start position
5. Repeat this sequence for the duration of the strength interval

Push Up

EMPHASIS: CHEST, SHOULDERS, & BACK OF ARMS

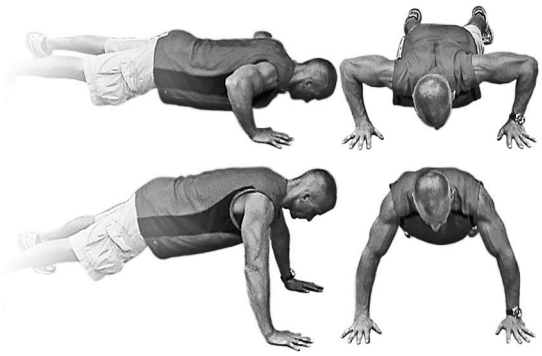

There are two variations of this exercise. If you aren't able to perform the exercise as shown in this illustration, place your knees on the floor, a padded mat, or a pillow. Also, a wider hand position places more emphasis on the chest and shoulder muscles, while a narrower hand position places more emphasis on the Tricep muscles (back of the arm)

1. Place your hands on the floor or a set of dumbbells (Caution: be aware that the dumbbells may roll and result in injury, especially if the ends are round); draw your stomach muscles towards your spine to maintain a straight line between your ankles and shoulders
2. Begin with your elbows bent at 90˚
3. Fully straighten your arms
4. Repeat this sequence for the duration of the strength interval

Dumbbell Shoulder Press

EMPHASIS: SHOULDERS

1. Hold the dumbbells at shoulder height with an overhand (palms facing forward) or neutral (palms facing one another) grip
2. Press the dumbbells straight overhead until your arms are fully extended
3. Slowly lower to the start position
4. Repeat this sequence for the duration of the strength interval

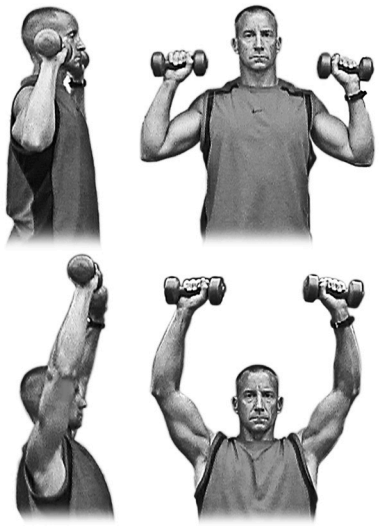

Dumbbell Tricep Overhead Extension

EMPHASIS: BACK OF ARMS

1. Hold the dumbbells at shoulder height behind your head with a neutral grip (palms facing one another); your elbows should be pointed straight ahead
2. Raise the dumbbells overhead until your arms are fully extended; your upper arms should remain stationary, pivoting at the elbows
3. Slowly lower to the start position
4. Repeat this sequence for the duration of the strength interval

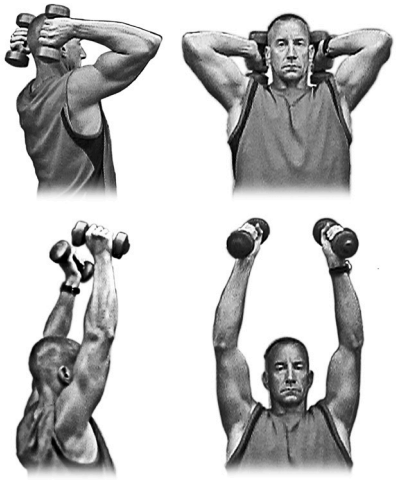

Dumbbell Bicep Curl

EMPHASIS: FRONT OF ARMS

1. Hold the dumbbells with an underhand grip (palms facing forward) beside your thighs
2. Tuck your upper arms into your ribcage
3. Curl the dumbbells to shoulder height by pivoting at your elbows
4. Slowly lower to the start position
5. Repeat this sequence for the duration of the strength interval

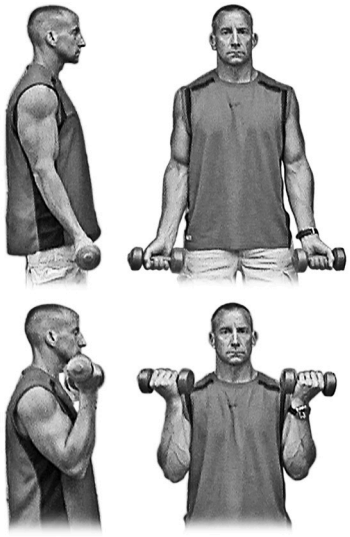

Heart Rate Program Operation

The Heart Rate Programs use your treadmill's incline system to adjust your heart rate. Increases and decreases in elevation affect heart rate much more efficiently than changes in speed. Additionally, changes in incline keep you in control of the machine's speed instead of the machine controlling you.

Selecting A Heart Rate Program

You have the option, during the setup mode, to choose either the Weight Control (HR-1) program or the Cardiovascular (HR-2) program. The Weight Control program attempts to maintain your heart rate at 60% of your Maximum Heart Rate. The Cardiovascular program attempts to maintain your heart rate at 80% of your Maximum Heart Rate. Your Maximum Heart Rate is based upon a formula that subtracts your age from 220. Your age input is performed during the setup mode.

CAUTION!

The target value used in HR-1 and HR-2 programs is a suggestion only for normal, healthy individuals. ***Do not exceed your limits!*** You may not be able to obtain your chosen target. If in question, enter a higher age value that will set a lower target goal.

1. Press the HR1/HR2 key to select the HR1 or HR2 program. Pressing the key once will show the HR1 program; pressing twice will show the HR2 program.
2. The Display will now be blinking showing the default age value (35). Adjust and press **Enter** or press **Enter** to accept the default.
3. The Display will now be blinking showing the default bodyweight value (150). Adjust and press **Enter** or press **Enter** to accept the default.
4. The Display will now be blinking the default time value (30:00). Adjust the time and press **Enter**.
5. The Display will be blinking, showing the default HR for this program. You may adjust it and press **Enter** if you want or just press **Enter** to accept the default value.
6. Press **Start** to begin program.

** Remember that you must maintain contact with the sensors or wear the chest strap for the program to work.

NOTE: It is recommended that you use the telemetric chest strap to achieve the best results with the heart rate programs.

Heart Rate

The old motto, “no pain, no gain”, is a myth that has been overpowered by the benefits of exercising comfortably. A great deal of this success has been promoted by the use of heart rate monitors. With the proper use of a heart rate monitor, many people find that their usual choice of exercise intensity was either too high or too low and exercise is much more enjoyable by maintaining their heart rate in the desired benefit range.

To determine the benefit range in which you wish to train, you must first determine your predicted Maximum Heart Rate. This can be accomplished by using the following formula: 220 minus your age. This will give you the predicted Maximum Heart Rate (MHR) for someone of your age. To determine the effective heart rate range for specific goals you simply calculate a percentage of your MHR. Your heart rate training zone is 50% to 90% of your maximum heart rate. Training at 60% of your maximum heart rate is recommended for burning fat, while training at 80% of your maximum heart rate is recommended for strengthening your cardiovascular system.

For someone who is 40 years old their predicted target heart rate zone is calculated:

220 – 40 = 180 (maximum heart rate)
180 x .6 = 108 beats per minute
(60% of maximum)
180 X .8 = 144 beats per minute
(80% of maximum)

So for a 40 year old the training zone would be 108 to 144 beats per minute.

If you enter your age during programming the console will perform this calculation automatically. After calculating your MHR you can decide upon which goal you would like to pursue.

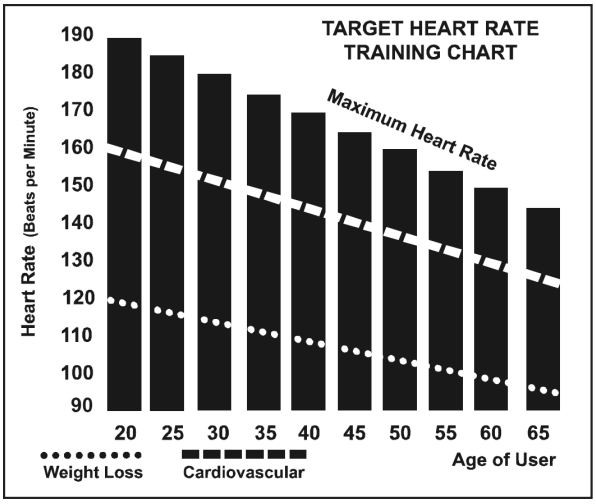

The two most popular reasons for exercise are cardiovascular fitness (training for the heart and lungs) and weight control. The black columns on the chart above represent the MHR for a person whose age is listed at the bottom of each column. The training heart rate, for either cardiovascular fitness or weight loss, is represented by two lines that cut diagonally through the chart. A definition of the lines’ goal is in the bottom left-hand corner of the chart. Whether your goal is weight loss or cardiovascular fitness, it can be achieved by training between 60% and 80% of your MHR. Consult your physician before participating in any exercise program.

Rate of Perceived Exertion

Heart rate is important but listening to your body also has a lot of advantages. There are more variables involved in how hard you should workout than just heart rate. Your stress level, physical health, emotional health, temperature, humidity, the time of day, the last time you ate and what you ate, all contribute to the intensity at which you should workout. If you listen to your body, it will tell you all of these things.

The rate of perceived exertion (RPE), also know as the Borg scale, was developed by Swedish physiologist G.A.V. Borg. This scale rates exercise intensity from 6 to 20 depending upon how you feel or the perception of your effort.

The scale is as follows:

Rating Perception of Effort

6 Minimal
7 Very,very light
8 Very,very light +
9 Very light
10 Very light +
11 Fairly light
12 Comfortable
13 Somewhat hard
14 Somewhat hard +
15 Hard
16 Hard +
17 Very hard
18 Very hard +
19 Very,very hard
20 Maximal

You can get an approximate heart rate level for each rating by simply adding a zero to each rating. For example a rating of 12 will result in an approximate heart rate of 120 beats per minute. Your RPE will vary depending up the factors discussed earlier. That is the major benefit of this type of training. If your body is strong and rested, you will feel strong and your pace will feel easier. When your body is in this condition, you are able to train harder and the RPE will support this. If you are feeling tired and sluggish, it is because your body needs a break. In this condition, your pace will feel harder. Again, this will show up in your RPE and you will train at the proper level for that day.

Wearing The Chest Strap

1. Attach the transmitter to the elastic strap using the interlocking button.
2. Adjust the strap as tightly as possible as long as the strap is not too tight to remain comfortable.
3. Position the transmitter with the logo centered in the middle of your torso facing away from your chest (some people must position the transmitter slightly left of center). Attach the final end of the elastic strap by inserting the round end and, using the locking parts, secure the transmitter and strap around your chest.

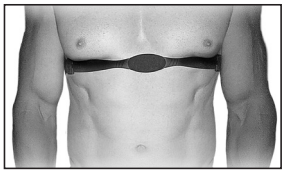

4. Position the transmitter directly below the pectoral muscles.
5. Sweat is the best conductor to measure very minute heart beat electrical signals. However, plain water can also be used to pre-wet the electrodes (2 ribbed oval areas on the reverse side of the belt and both sides of the transmitter). It's also recommended that you wear the transmitter strap a few minutes before your work out. Some users, because of body chemistry, have a more difficult time in achieving a strong, steady signal at the beginning. After "warming up", this problem lessens.

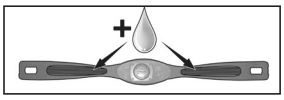

6. Your workout must be within range - distance between transmitter/receiver – to achieve a strong steady signal. The length of range may vary somewhat but generally stay close enough to the console to maintain good, strong, reliable readings. Wearing the transmitter directly on bare skin assures you of proper operation. If you wish, you may wear the transmitter over a shirt. To do so, wet the areas of the shirt that the electrodes will rest upon.

Note: The transmitter is automatically activated when it detects activity from the user's heart. Additionally, it automatically deactivates when it does not receive any activity. Although the transmitter is water resistant, moisture can have the effect of creating false signals, so you should take precautions to completely dry the transmitter after use to prolong battery life (estimated transmitter battery life is 2500 hours).

Erratic Operation

Caution! Do not use this treadmill for heart rate programs unless a steady, solid actual heart rate value is being displayed. High, wild and random numbers being displayed indicate a problem.

Areas to look for interference which may cause erratic heart rate:

1. Microwave ovens, TV's, small appliances, etc.
2. Fluorescent lights.
3. Some household security systems.
4. Perimeter fence for a pet.
5. Some people have problems with the transmitter picking up a signal from their skin. If you have problems try wearing the transmitter upside down. Normally the transmitter will be oriented so the XTERRA Fitness logo is right side up.
6. The antenna that picks up your heart rate is very sensitive. If there is an outside noise source, turning the whole machine 90 degrees may de-tune the interference.
7. Another individual wearing a transmitter within 3' of your machine's console.

If you continue to experience problems contact your us.

General Maintenance

Belt and Deck - Your treadmill uses a very high-efficient low-friction deck. Performance is maximized when the deck is kept as clean as possible. Use a soft, damp cloth or paper towel to wipe the edge of the belt and the area between the belt edge and frame. Also reach as far as practical directly under the belt edge. This should be done once every other month to extend belt and deck life. Use water only - no cleaners or abrasives. A mild soap and water solution along with a nylon scrub brush will clean the top of the textured belt. **Allow the belt to dry before using.**

Belt Dust - This occurs during normal break-in or until the belt stabilizes. Wiping excess off with a damp cloth will minimize buildup.

General Cleaning - Dirt, dust, and pet hair can block air inlets and accumulate on the running belt. On a monthly basis: vacuum underneath your treadmill to prevent buildup. Every other month, you should remove the black motor hood and carefully vacuum out dirt that may accumulate. UNPLUG POWER CORD BEFORE THIS TASK.

There is a maintenance schedule/chart included under the Table of Contents for convenient record keeping.

Belt Adjustments

Tread-belt Tension Adjustment - Belt tension is not critical for most users. It is very important though for joggers and runners in order to provide a smooth, steady running surface. Adjustment must be made from the rear roller with the 6mm Allen wrench provided in the parts package. The adjustment bolts are located at the end of the step rails as shown in the diagram below.

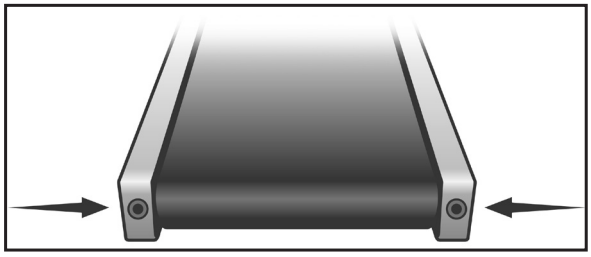

Tighten the rear roller only enough to prevent slippage at the front roller. Turn the tread-belt tension adjusting bolts 1/4 turn each and inspect for proper tension by walking on the belt and making sure it is not slipping or hesitating with each step. When an adjustment is made to the belt tension, you must be sure to turn the bolts on both sides evenly or the belt could start tracking to one side instead of running in the middle of the deck.

DO NOT OVERTIGHTEN – Over tightening will cause belt damage and premature bearing failure. If you tighten the belt a lot and it still slips, the problem could actually be the drive belt - located under the motor cover - that connects the motor to the front roller. If that belt is loose it feels similar to the walking belt being loose. Tightening the motor belt should be done by a trained service person.

Treadbelt Tracking Adjustment

The treadmill is designed so that the tread-belt remains reasonably centered while in use. It is normal for some belts to drift near one side while in use, depending on a user's gait and if they favor one leg. But if during use the belt continues to move toward one side, adjustments are necessary.

SETTING TREAD-BELT TRACKING

An 6mm Allen wrench is provided for this adjustment. Make tracking adjustments on the left side bolt. Set belt speed at 3 mph. Be aware that a small adjustment can make a dramatic difference which may not be apparent right away. If the belt is too close to the left side, then turn the bolt only a 1/4 turn to the right (clockwise) and wait a few minutes for the belt to adjust itself. Continue to make 1/4 turns until the belt stabilizes in the center of the running deck.

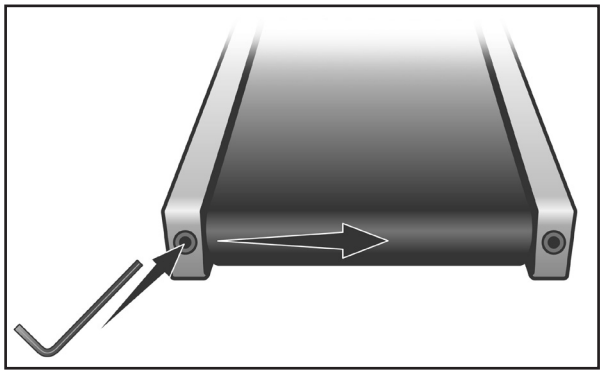

If the belt is too close to the right side, turn the bolt counter-clockwise. The belt may require periodic tracking adjustment depending on use and walking/running characteristics. Some users may affect tracking differently. Expect to make adjustments as required to center the tread-belt. Adjustments will become less of a maintenance concern as the belt is used. Proper belt tracking is an owner responsibility common with all treadmills.

ATTENTION

Damage to the running belt resulting from improper tracking / tension adjustments is not covered under the XTERRA Fitness warranty.

Belt/Deck Lubrication Procedure

First, you want to clean between the belt and deck to remove any debris that may be trapped. Use a clean, non-fraying rag, t-shirt, or light towel. Halfway between the end of the treadmill and motor cover, shove the garment under the belt until you can grasp it on both sides of the belt. Drag the garment the length of the entire belt 1-2 times. Remove the garment.

Do not lubricate with anything other than XTERRA Fitness approved lubricant. **Your treadmill comes with one tube of "Lube" and extra tubes can be ordered directly from www.xterrafitness.com**.

Keeping the deck lubricated at the recommended intervals ensures the longest life possible for your treadmill. If the lubricant dries out, the friction between the belt and deck rises and places undue stress on the drive motor, drive belt and electronic motor control board, which could result in failure of these components. Failure to lubricate the deck at regular intervals may void the warranty.

The belt & deck come pre-lubricated and subsequent lubrication should be performed every 90 hours of use or if you notice that the deck is dry. It is recommended that you reach between the belt and deck to verify there is lubrication present, every other month. If you check and there isn't any lubrication present, follow the procedure below even though the "Lube" indicator isn't lit on the console. Otherwise, lubricate when the console's lubrication reminder lights after 90 hours of use. Use the following procedure to apply the silicone lubricant:

1. Turn the power switch off and unplug the power cord from the wall outlet
2. Measure 18" from the edge of the motor cover; kneel down and reach under the belt approximately 4- 6" from one edge. Squirt a line of lubricant about 1/8" wide x 15" long in an "S" pattern perpendicular to the motor cover.
3. Repeat the process on the opposite side.
4. Plug the electrical cord back into the outlet and turn the power switch on.
5. Walk on the belt at a moderate speed for five minutes to evenly distribute the silicone lube.
6. Note: If the "Lube" message appears on the console, perform the following procedure to reset the message:
    1. To enter the Engineering Mode Menu press and hold down the **Start**, **Stop** and **Enter** keys, then at the same time insert the safety key. Keep holding the keys down until the Display displays Engineering Mode Menu. Press the **Enter** key to access
    2. Press the **Speed** ▲ key (or **Speed** ▼ key to go backwards) until "Functions" appears; press **Enter**
    3. Press the **Speed** ▲ key until "Reset Lube" message appears; press **Enter**
    4. Press **Stop** to exit Engineering mode and resume use of your treadmill

Service Checklist - Diagnosis Guide

Before contacting us for aid, please review the following information. It may save you both time and expense. This list includes common problems that may not be covered under the treadmill's warranty.

Problem	Solution/Cause
Display does not light	1. Tether cord not in position. 2. Circuit breaker on front grill tripped. Push circuit breaker in until it locks. 3. Plug is disconnected. Make sure plug is firmly pushed into 115 VAC wall outlet. 4. Breaker panel circuit breaker may be tripped. 5. Treadmill defect. Contact XTERRA Fitness.
Tread-belt does not stay centered Treadmill belt hesitates when walked/run on	The user may be walking while favoring or putting more weight on either the left or right foot. If this walking pattern is natural, track the belt slightly off-center to the side opposite from the belt movement. See **General Maintenance** section on **Tread-belt Tension**. Adjust as necessary.
Motor is not responsive after pressing **Start**	1. If the belt moves, but stops after a short time and thedis-play shows "LS", run calibration. 2. If you press **Start** and the belt never moves, then the display shows LS, contact service.
Treadmill will only achieve approximately 7 mph but shows higher speed on display	This indicates motor should be receiving power to operate. Low AC voltage to treadmill. Do not use an extension cord. If an extension cord is required it should be as short as possible and heavy duty 16 gauge minimum. Low voltage. Contact an electrician or XTERRA Fitness. A minimum of 110 volt AC current is required.
Tread-belt stops quickly/suddenly when tether cord is pulled	High belt/deck friction. See **General Maintenance** section on cleaning the deck. If cleaning doesn't prevent this from reoccurring, check to see if there is significant wear of the deck. If so, the deck may need to be flipped if it is on its original side
Treadmill trips on board 15 amp circuit	High belt/deck friction. See **General Maintenance**. If cleaning doesn't prevent this from reoccurring, check the amp draw of the motor. If this is high and there are signs of significant wear of the deck, it may need to be flipped if it is on its original side
Computer shuts off when console is touched (on a cold day) while walking/running	Treadmill may not be grounded. Static electricity is "crashing" the computer. Refer to **Grounding Instructions** on page 3.
Circuit breaker trips, but not the treadmill circuit breaker	Check that the treadmill is the only appliance in the circuit. See "Important Electrical Information" in the front of this manual for more details.

Error Messages

LS: The treadmill hasn't received a speed signal for 8 seconds.
E1: Console memory malfunction or CPU problem.
E2: Incline position error.

Engineering Mode

If you want to set the Speed and Distance to Metric or if there is a problem with the speed and you would like to perform the calibration procedure, use the Engineering Mode. To enter Engineering Mode press, and hold for 5 seconds, the **Start** and **Speed ▲** keys while installing the safety key. All the segments will light then the message window will display software versions and tell you to press **Enter**.

- The display will ask for grade return. This will reset the incline to zero, when set to ON, when you stop a program.
- The message window will now be showing the setting for English (miles) or Metric (Kilometers) Use the **▲/▼** keys to select and press **Enter**
- The message window will ask to adjust the wheel size for calibration. **Enter** 63.
- The display will show a number for the lowest speed setting (for miles the number should be 0.5). Adjust the low speed setting with the **▲/▼** keys and press **Enter**.
- The display will show a number for the top speed setting (for Miles it should be 12.0).
- The display will ask for top incline setting, enter 15.
- Press **Start** to begin calibration. This is an automatic process, the belt will move and change speeds without warning. Be Careful! When calibration is done, the console will return to the start-up screen

Manufacturer's Limited Warranty

Effective March 13, 2021 - TREADMILL LIMITED WARRANTY

XTERRA Fitness Inc. warrants all its home use treadmill parts for a period of time listed below, from the date of retail sale, as determined by a sales receipt or in the absence of a sales receipt, eighteen (18) months from the original factory shipping date. XTERRA Fitness's responsibilities include providing new or remanufactured parts, at XTERRA Fitness's option, and technical support to our independent dealers and servicing organizations. In the absence of a dealer or service organization, these warranties will be administered by XTERRA Fitness directly to a consumer. The warranty period applies to the following components:

Home Use Limited Warranty

Frame & Motor	Deck	Parts	Labor
Lifetime	5 Years	2 Years	1 Year

NORMAL RESPONSIBILITIES OF THE CONSUMER

This warranty applies only to products in ordinary household use. The consumer is responsible for the items listed below:

1. The warranty registration card must be completed and returned to the address listed on the card within 10 days of the original purchase to validate the manufacturer's limited warranty or register online at http://www.xterrafitness.com/warrantyreg.html.
2. Proper use of the treadmill in accordance with the instructions provided in this manual, including maintenance.
3. Proper connection to a power supply of sufficient voltage, replacement of blown fuses, repair of loose connections or defects in house/facility wiring.
4. Expenses for making the treadmill accessible for servicing, including any item that was not part of the treadmill at the time it was shipped from the factory.
5. Damages to the treadmill finish during shipping, installation or following installation.

EXCLUSIONS

This warranty does not cover the following:

1. CONSEQUENTIAL, COLLATERAL, OR INCIDENTAL DAMAGES SUCH AS PROPERTY DAMAGE AND INCIDENTAL EXPENSES RESULTING FROM ANY BREACH OF THIS WRITTEN OR ANY IMPLIED WARRANTY. Note: Some states do not allow the exclusion or limitation of incidental or consequential damages, so this limitation or exclusion may not apply to you.
   Note: Some states do not allow the exclusion or limitation of incidental or consequential damages, so this limitation or exclusion may not apply to you.
2. Service call reimbursement to the consumer. Service call reimbursement to the dealer that does not involve malfunction or defects in workmanship or material, for units that are beyond the warranty period, for units that are beyond the service call reimbursement period, for treadmills not requiring component replacement, or treadmills not in ordinary household use.
3. Damages caused by services performed by persons other than authorized XTERRA Fitness service companies, use of parts other than original XTERRA Fitness parts, or external causes such as alterations, modifications, abuse, misuse, accident, improper maintenance, inadequate power supply, or acts of God.
4. Products with original serial numbers that have been removed or altered.
5. Products that have been; sold, transferred, bartered, or given to a third party.
6. Products that are used as store display models.
7. Products that do not have a warranty registration on file at XTERRA Fitness, Inc. XTERRA Fitness reserves the right to request proof of purchase if no warranty record exists for the product.
8. Product use in any environment other than a residential setting.
9. THIS WARRANTY IS EXPRESSLY IN LIEU OF ALL OTHER WARRANTIES EXPRESSED OR IMPLIED, INCLUDING THE WARRANTIES OF MERCHANTABILITY AND/OR FITNESS FOR A PARTICULAR PURPOSE.

SERVICE

Keep your bill of sale. Twelve (12) months from the date on the bill of sale or eighteen (18) months from the date of factory shipping as determined by the serial number establishes the warranty period should service be required. If service is performed, it is in your best interest to obtain and keep all receipts. This written warranty gives you specific legal rights. You may also have other rights that vary from state to state. Service under this warranty must be obtained by following these steps, in order:

1. Contact your selling authorized XTERRA Fitness dealer. OR
2. Contact your local authorized XTERRA Fitness service organization.
3. If there is a question as to where to obtain service, contact our service department at (870) 336-4286.
4. XTERRA Fitness's obligation under this warranty is limited to repairing or replacing, at XTERRA Fitness's option, the product through one of our authorized service centers. All repairs must be preauthorized by XTERRA Fitness. If the product is shipped to a service center freight charges to and from the service center will be the customer's responsibility. For replacement parts shipped while the product is under warranty, the customer will be responsible for shipping and handling charges. For in-home service, the customer will be responsible for a trip charge. There will be an additional trip charge if the customer is located over 100 miles from the nearest service center.
5. The owner is responsible for adequate packaging upon return to XTERRA Fitness. XTERRA Fitness is not responsible for damages in shipping. Make all freight damage claims with the appropriate freight carrier. DO NOT SHIP ANY UNIT TO OUR FACTORY WITHOUT A RETURN AUTHORIZATION NUMBER. All units arriving without a return authorization number will be refused.
6. For any further information, or to contact our service department by mail, send your correspondence to:

XTERRA Fitness, Inc.
P.O. Box 2037
Jonesboro, AR 72402-2037

Product features or specifications as described or illustrated are subject to change without notice. All warranties are made by XTERRA Fitness, Inc. This warranty applies only in the 48 contiguous United States. NOTE: This does not apply to Alaska or Hawaii.

3000 Nestle Road Jonesboro, AR 72401 - Phone:870-336-4286 - Fax:870-935-7611

©2021 All RIghts Reserved.