XTERRA FITNESS

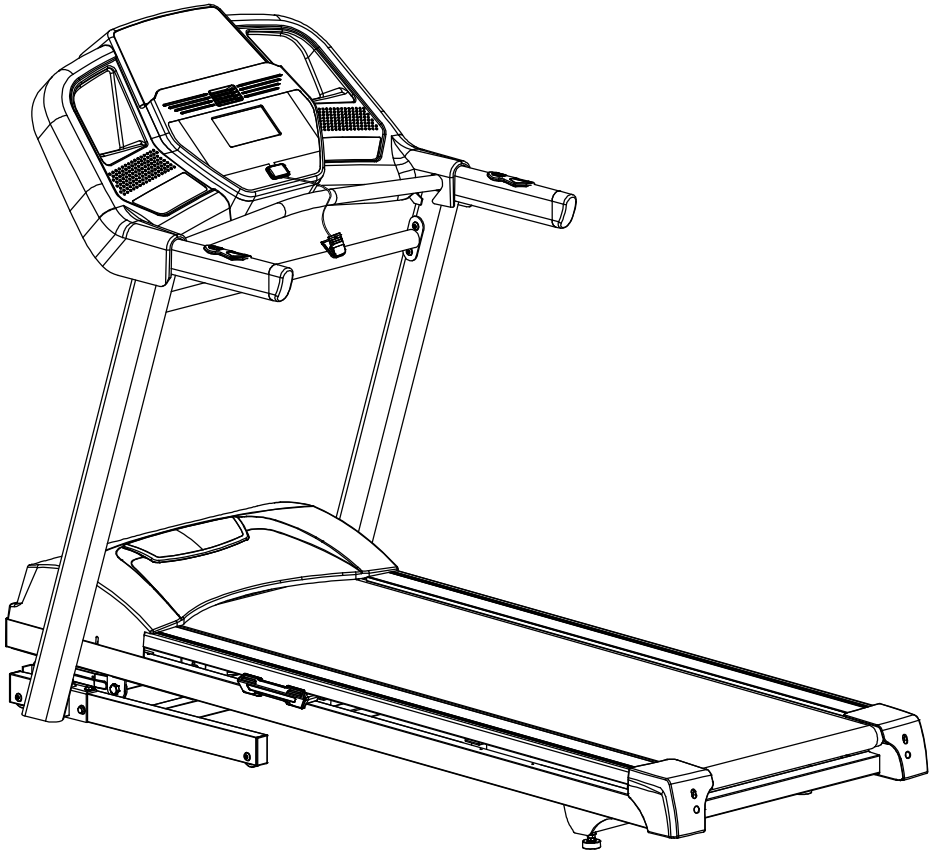

TR75 TREADMILL

TR75_OwnersManual_175873_20260713

Online Support

If you require assistance or are experiencing issues with your XTERRA Machine, please contact customer care for additional help.

1-800-258-8511

questions@xterrafitness.com

Warranty Registration

Scan to quickly and easily register your new XTERRA Fitness machine.

Table of Contents

Product Registration 3

Warning / Safety Instructions

Product Labels 4

Safety Instructions 5

Electrical Safety 6

Grounding & Location Requirements 7

Parts and Assembly

Parts Included 8

Pre-Assembly 9

Assembly 10

Setting Up Your Unit 14

Safety Key 16

Technology and Features

About Your Machine 17

Features 18

Console Screen - Overview 20

Using the XF Connect App 21

Quick Start 22

Programs

Programs 23

Preset Programs 25

Wearing the Chest Strap 31

Heart Rate Exertion 32

Maintenance

Maintenance & Care 34

Deck Lubrication 36

Belt & Deck Cleaning & Calibration 37

Exploded View Diagram 39

Parts List 40

Warranty & Troubleshooting

Warranty 43

Troubleshooting 46

PRODUCT REGISTRATION

Congratulations on your new treadmill, and welcome to the XTERRA Fitness family!

Thank you for your purchase of this quality unit from XTERRA Fitness. Your new unit was manufactured by one of the leading fitness manufacturers in the world and is backed by one of the most comprehensive warranties available. XTERRA Fitness will do all we can to make your ownership experience as pleasant as possible for many years to come.

If you have questions, or if parts are missing or damaged, or you require customer service, call (870) 336-4286. Please have your model number and serial number handy when you call.

Please take a moment at this time to record the name of the dealer, their telephone number, and the date of purchase below to make any future, needed contact easy. We appreciate your support and we will always remember that you are the reason that we are in business.

Serial Number	
Date of Purchase	
Dealer / Place of Purchase	

WARRANTY REGISTRATION

Use your smartphone to scan the QR code above to quickly and easily register your new XTERRA Fitness machine.

You can also go to **xterrafitness.com/warranty** under the Support tab to register online.

Version: 2.0
Revision: 07/13/26

PRODUCT LABELS

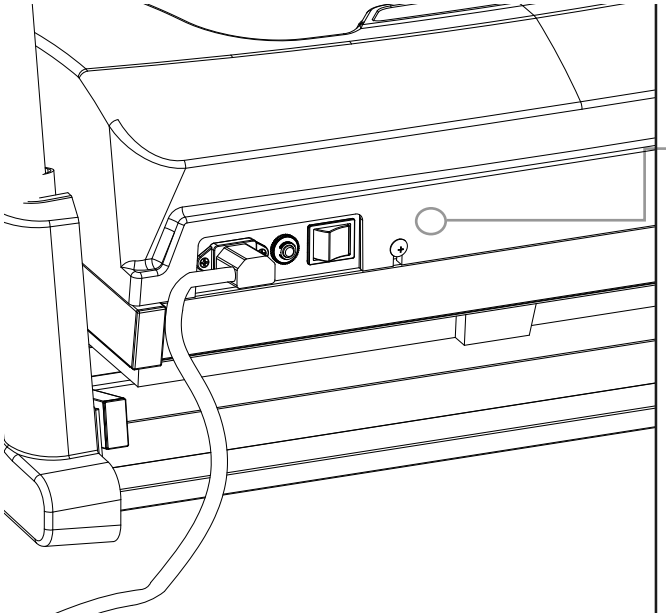

SERIAL NUMBER

XTERRA

(870)336-4286

SERIAL NUMBER STICKER

This sticker will be found on the rear of the motor cover. Please record the number below the barcode for the purpose of registering your treadmill's warranty.

WARNING: Cancer and Reproductive Harm - www.P65Warnings.ca.gov

PROPOSITION 65 WARNING

This sticker will be found on the rear of the motor cover. The State of California requires us to inform you that this unit was manufactured using chemicals that could cause harm with improper use.



SAFETY WARNING STICKER

This sticker will be found on the interior side of your treadmill's upright. The same warning can be found in this manual. Please read and be aware of the precautions before operating your unit.

WARNING
AVERTISSEMENT

SERIOUS INJURY COULD OCCUR IF THESE PRECAUTIONS ARE NOT OBSERVED.

- Consult your physician before use.
- Stop immediately if you become dizzy or experience chest pains and consult your physician.
- Heart Rate monitoring systems can be inaccurate; use them for reference only.
- Read all warnings on the unit and be properly instructed or read the Owner's Manual on how to use before beginning.
- Inspect this machine for damage prior to use.
- Keep body, clothing, and fitness accessories clear of moving parts.
- Risk of personal injury – Keep children under the age of 13 away from machine.

Le non respect de ces directives pourrait entraîner des blessures graves, voir mortelles:

- Consultez votre médecin avant de l'utiliser.
- Arrêtez immédiatement en cas d'étourdissements ou des douleurs à la poitrine et consultez votre médecin.
- Les lectures de fréquence cardiaque peuvent être inexactes; utiliser à titre indicatif seulement.
- Lisez tous les avertissements et les instructions sur l'appareil et dans le manuel du propriétaire avant l'utilisation.
- Inspectez cet appareil pour tout dommages avant de l'utiliser.
- Garder le corps, les vêtements et accessoires d'entraînement à l'écart des pièces mobiles.
- Risque de blessures- gardez les enfants âgés de moins de 13 ans loin de l'appareil.

SAFETY INSTRUCTIONS

When using an electrical appliance, basic precautions should always be followed, including the following:
Read all instructions before using this appliance.

DANGER - To reduce the risk of electric shock:
Always unplug this appliance from the electrical outlet immediately after using and before cleaning.

WARNING - To reduce the risk of burns, fire electric shock, or injury to persons:

1. An appliance should never be left unattended when plugged in. Unplug from outlet when not in use, and before putting on or taking off parts.
2. Do not operate under blanket or pillow. Excessive heating can occur and cause fire, electric shock, or injury to persons.
3. This exercise equipment is not intended for use by persons with reduced physical, sensory or mental capabilities, or lack of experience and knowledge.
4. Use this appliance only for its intended use as described in this manual. Do not use attachments not recommended by the manufacturer.
5. Never operate this appliance if it has a damaged cord or plug, if it is not working properly, if it has been dropped or damaged, or dropped into water. Return the appliance to a service center for examination and repair.
6. Do not carry this appliance by supply cord or use cord as a handle.
7. Keep the cord away from heated surfaces.
8. Never operate the appliance with the air openings blocked. Keep the air openings free of lint, hair, and the like.
9. Never drop or insert any object into any opening.
10. Do not use outdoors.
11. Do not operate where aerosol (spray) products are being use or where oxygen is being administered.
12. Connect this appliance to a properly grounded outlet only. See Grounding Instructions.
13. The appliance is intended for household use.
14. To disconnect, turn all controls to the off position, then remove the plug from the outlet.
15. Do not operate equipment on deeply padded, plush or shag carpet. Damage to both carpet and equipment may result.
16. Before beginning this or any exercise program, consult a physician. This is especially important for persons over the age of 35 or persons with pre-existing health conditions.
17. Keep hands away from all moving parts.
18. The pulse sensors are not medical devices. Various factors, including the user's movement, may affect the accuracy of heart rate readings. The pulse sensors are intended only as exercise aids in determining heart rate trends in general.
19. Do not attempt to use your equipment for any purpose other than for the purpose it is intended.
20. Wear proper shoes. High heels, dress shoes, sandals or bare feet are not suitable for use on your equipment. Quality athletic shoes are recommended to avoid leg fatigue.
21. **User Weight Limit: 350 lbs.**

Please ensure that you review and adhere to the user weight restrictions and power requirements of your new machine. Failure to do so may result in serious injury or damage to your machine.

ELECTRICAL SAFETY

WARNING!

Route the power cord away from any moving part of the unit including the elevation mechanism and transport wheels.

NEVER remove any cover without first disconnecting AC power. If voltage varies by ten percent (10%) or more, the performance of your unit may be affected. **Such conditions are not covered under your warranty.** If you suspect the voltage is low, contact your local power company or a licensed electrician for proper testing.

NEVER expose this unit to rain or moisture. This product is **NOT** designed for use outdoors, near a pool or spa, or in any other high humidity environment. The temperature specification is 40 degrees C, and humidity is 95%, non-condensing (no water drops forming on surfaces).

Circuit breakers: Avoid AFCI/GFCI circuit breakers if possible. These breakers may trip occasionally during exercise because of the high inrush currents of the unit drive electronics and motor. This is an issue that affects all unit brands. New laws in your area may require these breakers. If you do have these breakers and outlets in your home, and are experiencing nuisance tripping, you should check if there are any other devices plugged into the same circuit. Some examples of devices that may also cause tripping are fluorescent lights with electronic ballasts, coffee maker, space heater, hair drier.

Optimally the unit should be the only device plugged into the circuit. Our units have surge suppressors built in to help avoid nuisance tripping. We have tested several AFCI/GFCI breakers and outlets with our products. Brands we have tested are: Eaton (Cutler Hammer Series), Leviton (Smart lock pro) and Schneider Electric (Canadian home series). These breakers do not trip in our testing, when connected to our units, as long as no other devices are plugged into the same circuit.

- **NEVER** operate this unit without reading and completely understanding the results of any operational change you request from the computer.
- Understand that changes in speed and incline do not occur immediately. Set your desired work level on the computer console and release the adjustment key. The computer will obey the command gradually.
- **NEVER** use your unit during an electrical storm. Surges may occur in your household power supply that could damage unit components. Unplug the unit during an electrical storm as a precaution.
- Use caution while participating in other activities while walking on your unit; such as watching television, reading, etc. These distractions may cause you to lose balance which may result in serious injury.
- Do not use excessive pressure on console control keys. They are precision set to function properly with little finger pressure.

GROUNDING & LOCATION REQUIREMENTS

This product must be grounded. If the unit should malfunction or breakdown, grounding provides a path of least resistance for electric current, reducing the risk of electric shock. This product is equipped with a cord having an equipment-grounding plug. The plug must be plugged into an appropriate outlet that is properly installed and grounded in accordance with all local codes and ordinances.

DANGER - Improper connection of the equipment-grounding conductor can result in a risk of electric shock. Check with a qualified electrician or serviceman if you are in doubt as to whether the product is properly grounded. Do not modify the plug provided with the product if it will not fit the outlet; have a proper outlet installed by a qualified electrician.

This product is for use on a nominal 120-volt circuit, and has a grounding plug that looks like the plug illustrated below. A temporary adapter that looks like the adapter illustrated below may be used to connect this plug to a 2-pole receptacle as shown below if a properly grounded outlet is not available. The temporary adapter should be used only until a properly grounded outlet, (shown below) can be installed by a qualified electrician. The green colored rigid ear-lug, or the like, extending from the adapter, must be connected to a permanent ground such as a properly grounded outlet box cover. Whenever the adapter is used, it must be held in place by a metal screw.

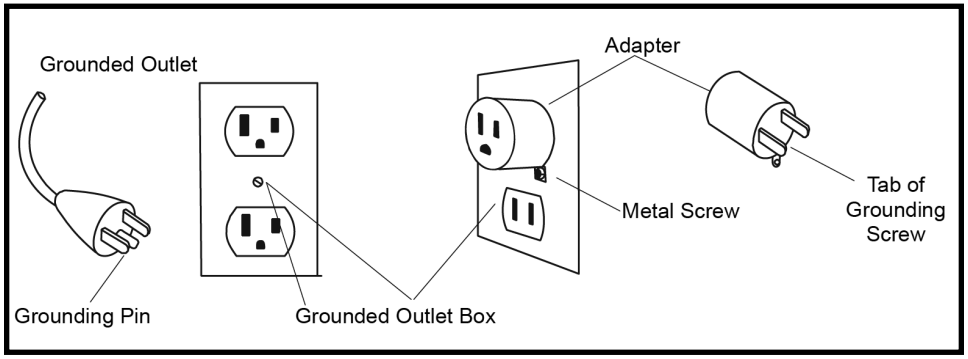

Location Requirements

After assembling your treadmill, you'll need to make sure you've installed it in a safe area.

- We recommend that you leave an area of at least 20in on the front, and sides of your machine. The front of the unit is where the motor is located.
- We recommend that you leave an area of at least 6ft behind the treadmill.
- Install your treadmill in an area where children and pets cannot access it.
- Always keep the area around your treadmill clear of furniture, exercise equipment and other debris.
- Do not install your treadmill on deeply padded, plush, or shag carpet.

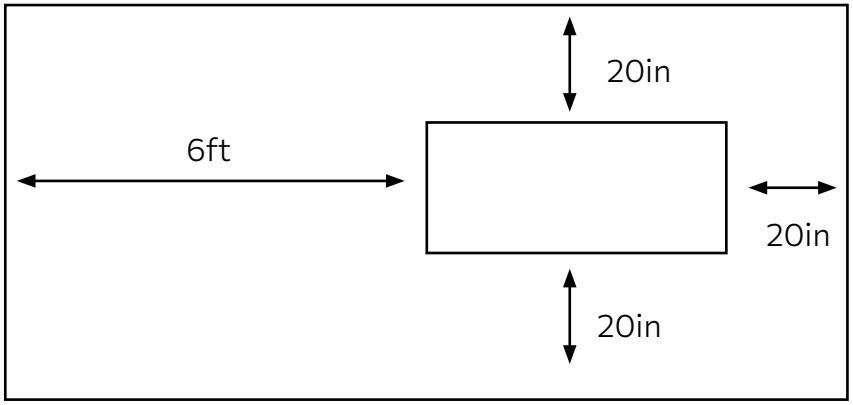

PARTS INCLUDED

TOOLS INCLUDED:

- Combination M5 Allen Wrench & Phillips Head Screwdriver
- M6 L Allen Wrench
- 13mm Wrench

PARTS INCLUDED:

- 1 Main Frame
- 2 Uprights
- 2 Frame Base Covers
- 1 Console
- 1 Deck
- 1 Power Cord
- 1 Lubricant
- 1 Hardware Kit



#80. Ø8 × 1.5T
Split Washer (4pcs)



#100. Ø5/16" × Ø18 × 1.5T
Flat Washer (8pcs)



#99. 5/16"× UNC18 × 3/4"
Hex Head Bolt (8pcs)

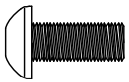

#125. 5/16" × UNC18 × 3/4"
Button Head Socket Bolt (8pcs)



#44. Safety Key (1pc)

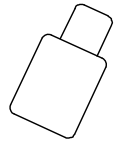

#104. Lubricant (1pc)

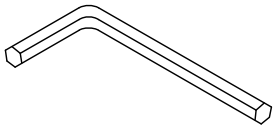

#103. M6 L Allen Wrench (1pc)

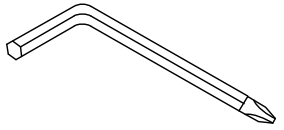

#102. Combination M5 Allen Wrench
& Phillips Head Screwdriver (1pc)

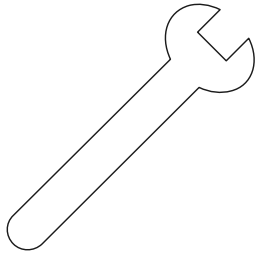

PRE-ASSEMBLY

WARNING: There is a Velcro strap installed around the treadmill base that prevents the unit from unfolding accidentally during shipping. If this strap is not removed properly the treadmill could spring open unexpectedly and cause injury if someone is standing near the unit when the strap is removed.

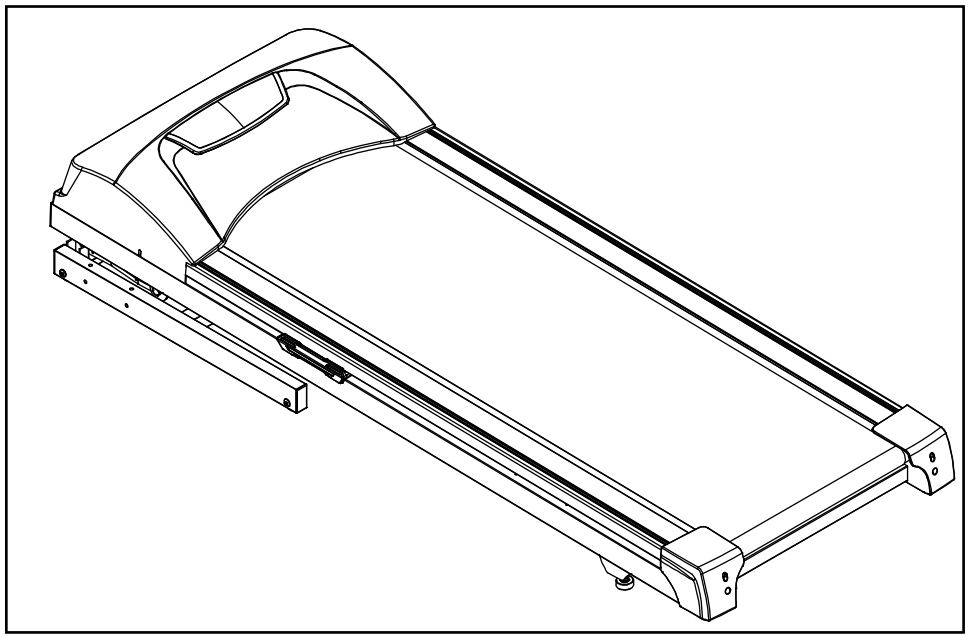

To ensure your personal safety during removal of the shipping strap please make sure the treadmill is positioned flat on the ground, in the orientation it would be in if you were using the treadmill. Do not turn the treadmill up on its side while removing the shipping strap. This could cause the unit's folding mechanism to spring open. If the end of the Velcro strap (that you need to grab to remove it) happens to be under the treadmill deck, reach under the deck to grab it, but do not tilt the treadmill up to gain access to the strap end.

1. Cut the straps, then lift the box over the unit and unpack.
2. Carefully remove all parts from the carton and inspect for any damage or missing parts. If parts are damaged or missing, contact your dealer immediately.
3. Locate the hardware package. Remove the tools first.
4. Remove the hardware for each step as needed to avoid confusion. The numbers in the instructions that are in parenthesis (#) are the item number from the assembly drawing for reference.

ASSEMBLY

1. Take out the treadmill from the carton and lay it aside on the smooth ground.

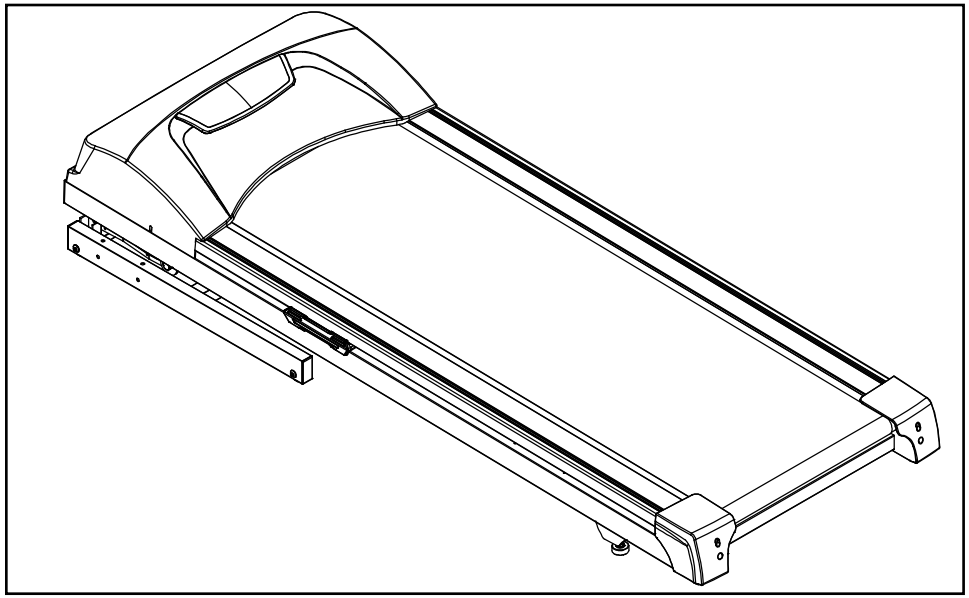

ASSEMBLY - CONTINUED

2. Connect **Computer Cable (Middle) (54)** with **Computer Cable (Lower) (55)** then insert **Right and Left Uprights (4) and (5)** into the **Frame Base (2)** and use **13m/m Wrench (90)** to tighten 8 pcs of **5/16" × 3/4" Hex Head Bolts (99)** and 8pcs of **Ø8 × Ø18 × 1.5T Flat Washers (100)**.

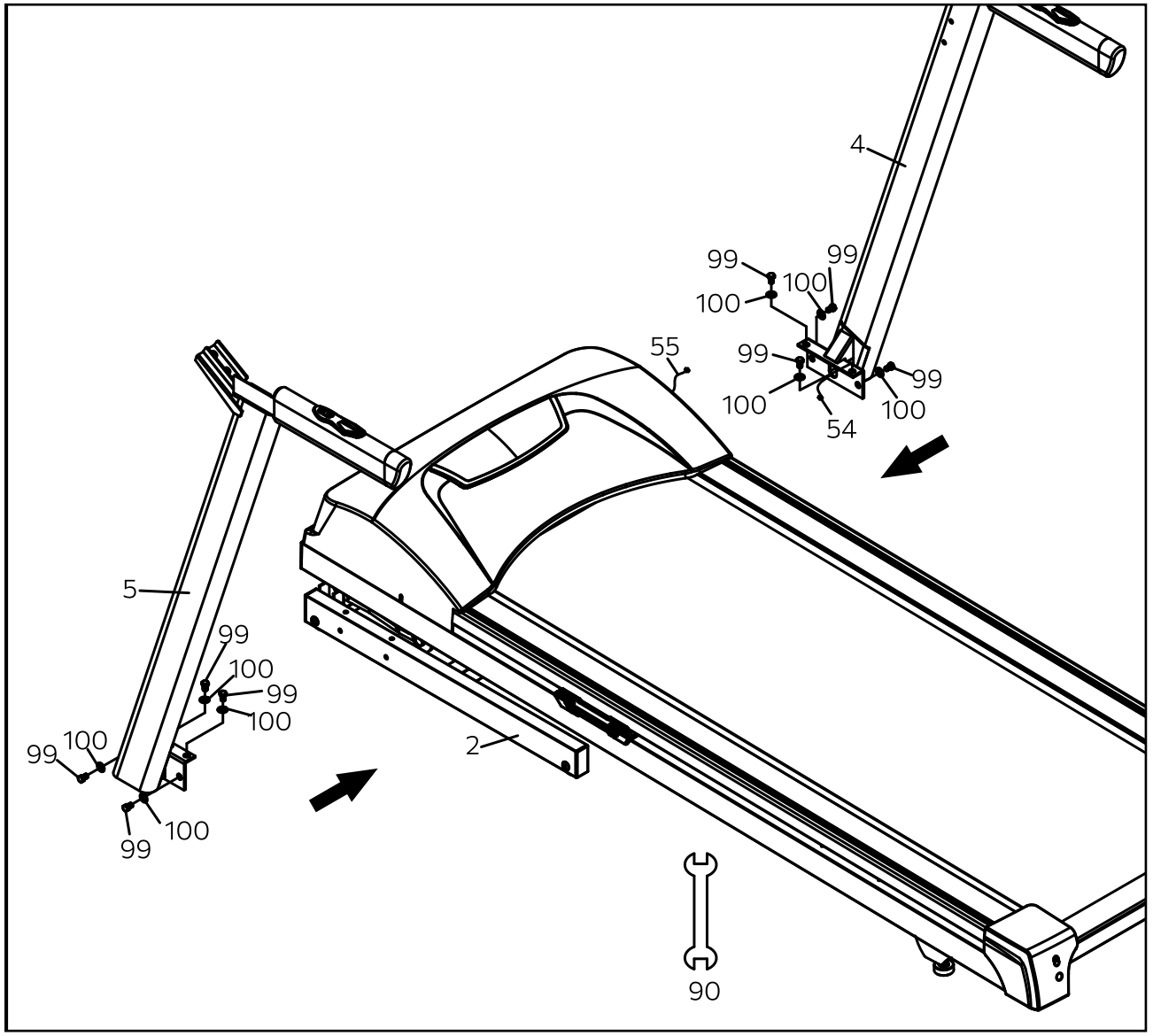

ASSEMBLY - CONTINUED

3. Connect the **Computer Cable (Middle) (54)** and **Computer Cable (Upper) (53)**.

   Connect the **Speed Cable (Upper) (114)** and **Speed / Hand Pulse Complex (28) (3 pin)**.

   Connect the **Handpulse Wire (Upper) (114-01)** and **Speed/Hand Pulse Complex (28) (2 pin)**.

   Connect the **Incline Cable (Upper) (115)** and **Incline/Hand Pulse Complex (29) (3 pin)**.

   Connect the **Handpulse Wire (115-01)** and **Incline/Hand Pulse Complex (29) (2 Pin)**.

   Insert **Console Assembly (21)** into right and left **Uprights (4) and (5)** and secure with 4 pcs of **5/16" × UNC18 × 3/4"_ Button Head Socket Bolts (125)** with 4 pcs of **Ø8 × 1.5T Split Washers (80)** by using **Combination M5 Allen Wrench & Phillips Head Screw Driver (102)**.

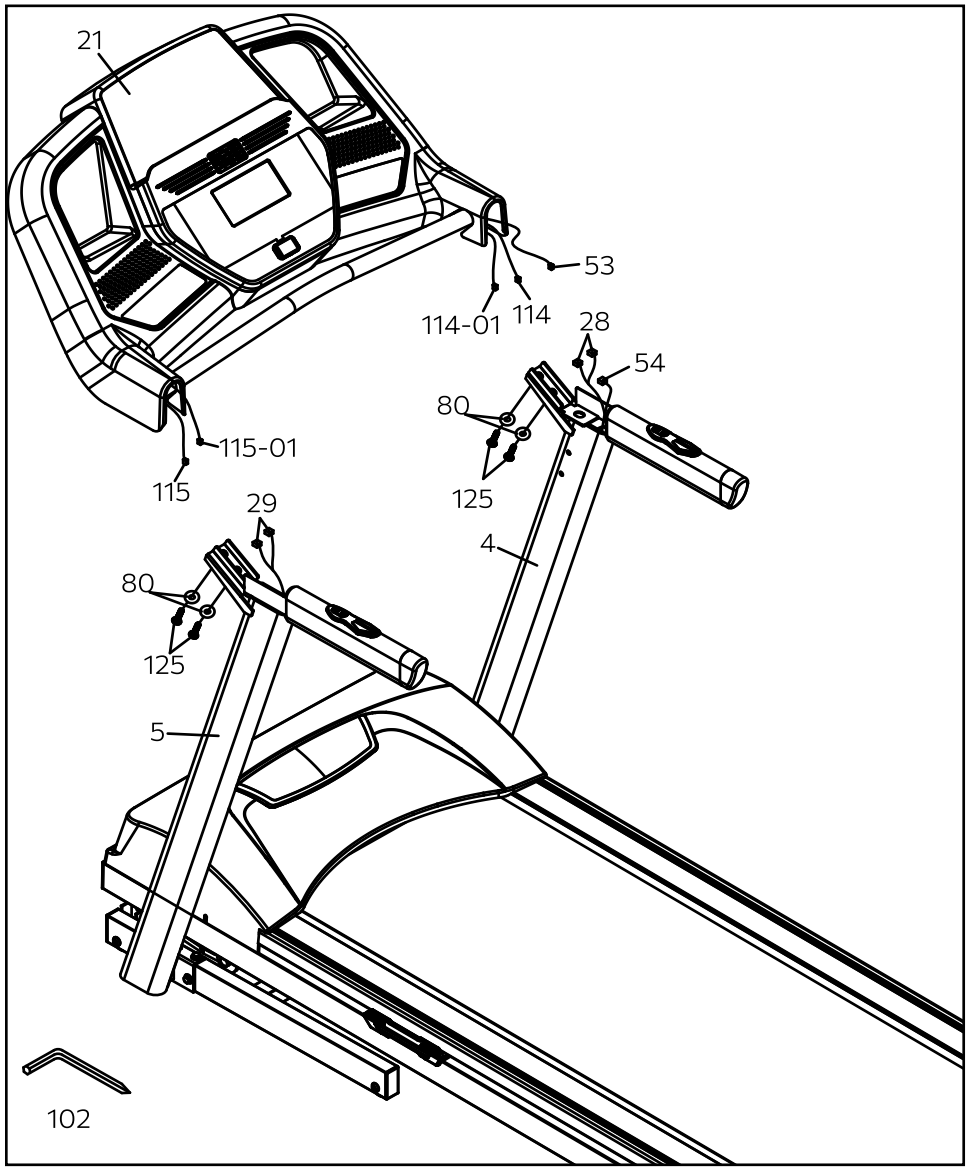

ASSEMBLY - CONTINUED

4. Install **Handrail Support (9)** between left and right **Uprights (5) and (4)** and use **Combination M5 Allen Wrench & Phillips Head Screw Driver (102)** to tighten 4 pcs of **5/16" × 3/4" Button Head Socket Bolts (125)**.

Note: Tighten all screws after component assembly is complete

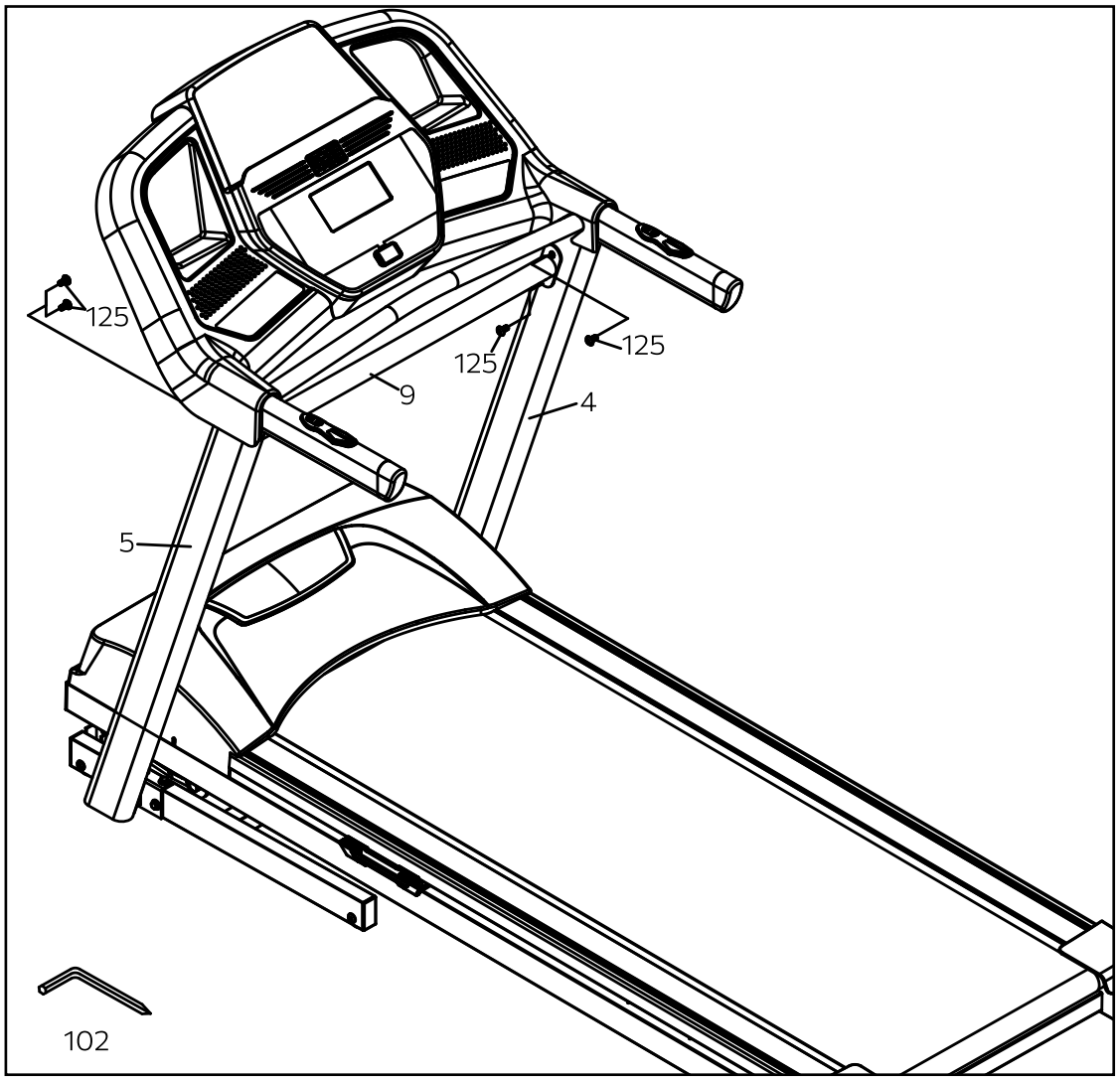

SETTING UP YOUR TREADMILL

Leveling

Use a M14 Wrench to adjust the height of the Leveling Feet.

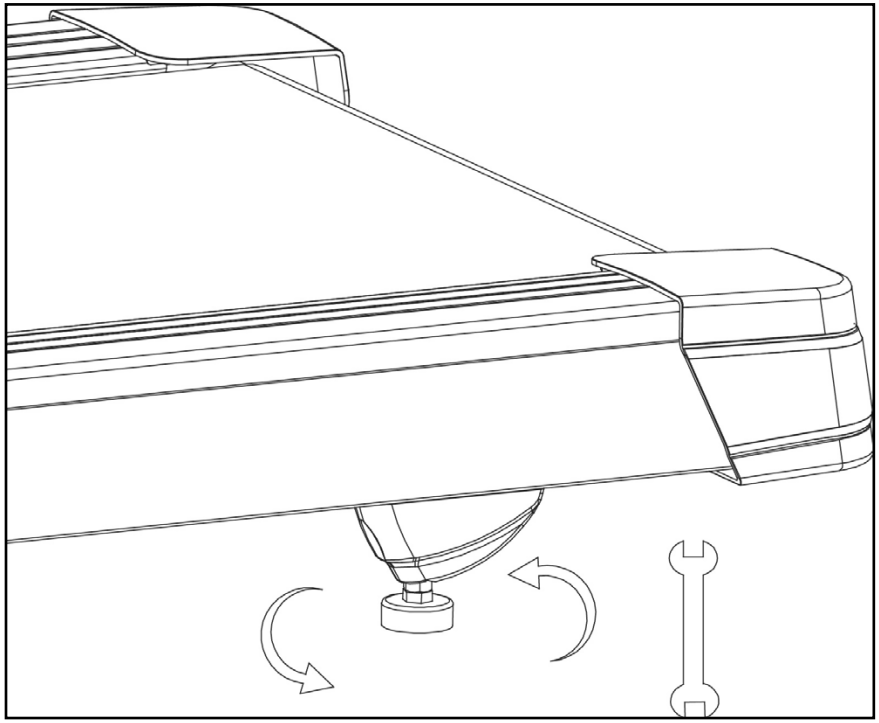

Plugging in and Powering On

Power the unit on by plugging it into an appropriate wall outlet, then turn on the power switch located at the front of the treadmill below the motor hood, Ensure that the Safety Key is installed, as the treadmill will not power on without it. When the power is turned on, all the lights on the display will light up for a short time and the console will show the software version.
The treadmill will then enter idle mode, which is the starting point for operation.

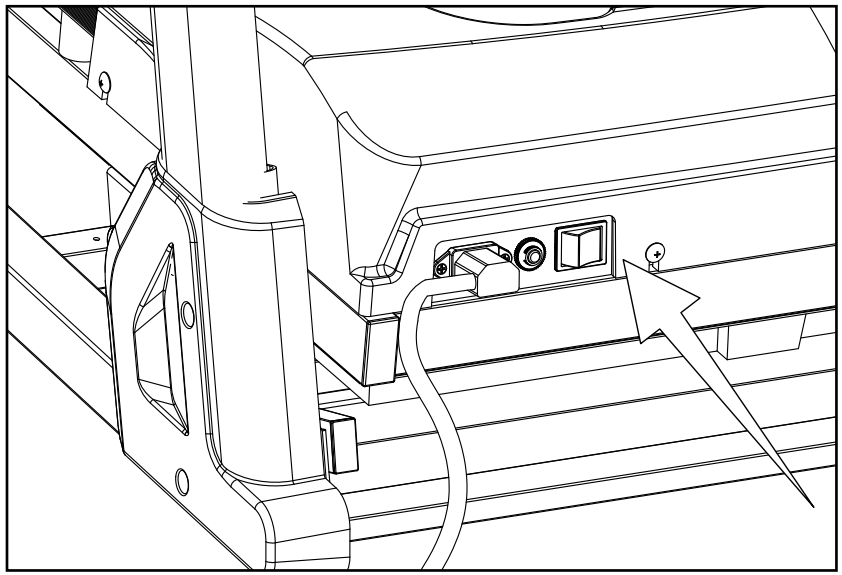

SETTING UP YOUR TREADMILL - CONTINUED

Folding Your Treadmill

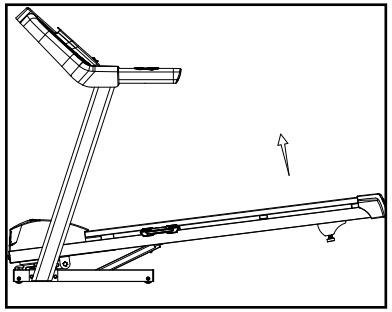

Lift the deck until the latch clicks in place.

Unfolding Your Treadmill

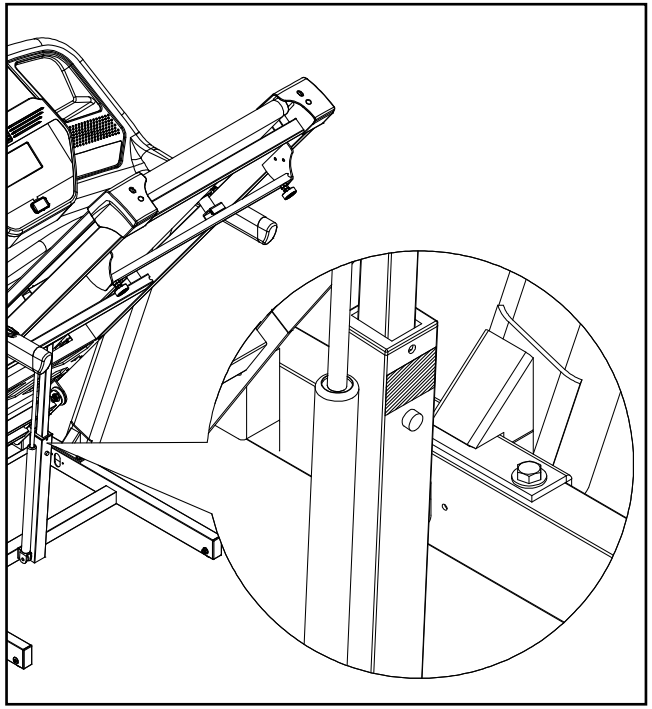

Press the releasing switch with your foot and pull down the running deck.

Gently lower the deck to the floor, supporting the deck with a hand.

Moving The Treadmill

The treadmill is equipped with four transport wheels that are engaged when folded. After folding, simply roll the unit away. No need to tilt.

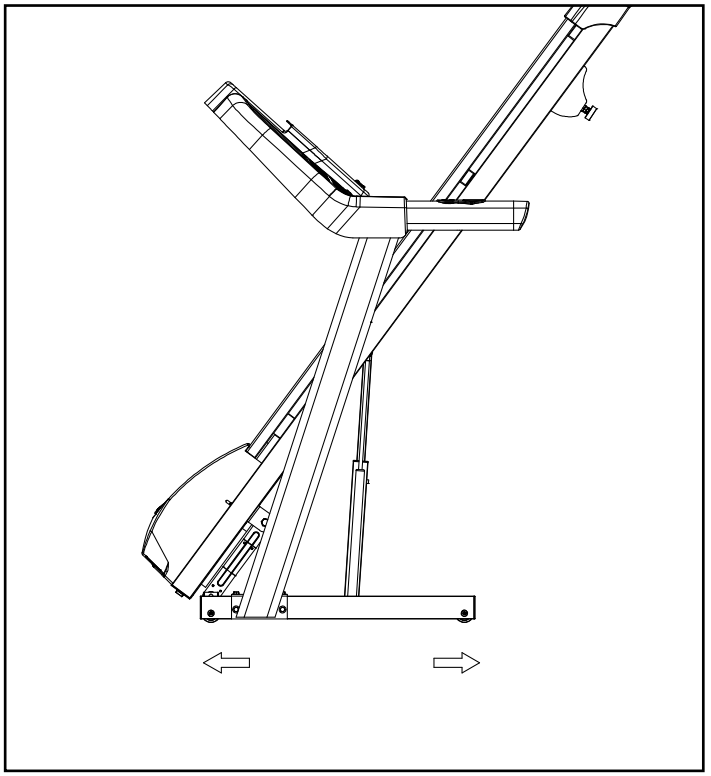

SAFETY KEY

A safety tether cord is provided with this unit.
It is a simple magnetic design that should be used at all times.
It is for your safety should you fall or move too far back on the tread-belt.
Pulling this safety tether cord will stop tread-belt movement.

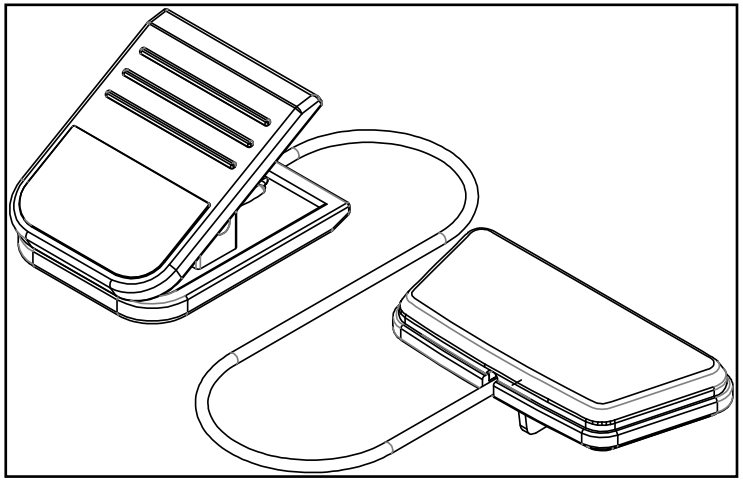

To Use:

1. Place the magnet into position on the round metal portion of the console control head. Your unit will not start and operate without this. Removing the magnet also secures the unit from unauthorized use.
2. Fasten the plastic clip onto your clothing securely to ensure good holding power. Note: The magnet has strong enough power to minimize accidental, unexpected stopping. The clip should be attached securely to make certain it does not come off. Be familiar with its function and limitations. The unit will stop, depending on speed, with a one to two step coast anytime the magnet is pulled off the console. Use the Stop / Pause switch in normal operation.

ABOUT YOUR MACHINE

Always use care and caution when operating your machine. Follow instruction in this manual to ensure safe operation and maintenance of your treadmill

Your new XTERRA Fitness treadmill has Bluetooth connectivity to give you access to the most advanced workout experiences available. Follow the instructions on page 21 to learn more about using the Bluetooth capabilities to their fullest potential.

Downloading the XF Connect app will help unlock more features - such as tracking workouts and sharing data via Google Fit and Apple Fitness. Simply search for "XF Connect" in the app store on your smartphone or tablet, or scan the QR code on the right



The XTERRA Fitness app is available on Google Play and the Apple App Store. Scan the QR Code below, and quickly and easily sign up to start taking your workout experience to a whole new level.

Available on the App Store

GET IT ON Google play

Be sure to follow XTERRA Fitness on your favorite social media platforms to view and share the latest fitness videos, images, and news.

facebook.com/XterraFitness

www.instagram.com/XterraFitness

youtube.com/user/XterraFitnessOnline

FEATURES

Handlebar Speed and Incline Controls

The treadmill allows you to make speed and incline changes on the side handrails.

Built-in Fan

The console includes a built-in fan to help keep you cool. To turn the Fan on, press the key on the left side of the console.

Console

The console will display Pace, Calories burned, Time (elapsed or countdown), Distance traveled, Pulse, Speed, Incline, Program Name, number of Laps completed, and Segment Time. There is also a Speed & Incline profile graph that lets you see how hard you have worked and how challenging the upcoming segments will be.

Dot Center Matrix Display

Twenty columns of boxes (10 high) indicate each segment of a workout. The boxes only show an approximate level (resistance) of effort. They do not necessarily indicate a specific value - only an approximate percent to compare levels of intensity. In Manual Operation the resistance dot matrix window will build a profile“picture”as values are changed during a workout.

Pause / Stop / Preset

1. When the treadmill is running the pause feature may be utilized by pressing the red Stop key once. This will slowly decelerate the tread-belt to a stop. The incline will go to zero percent. The Time, Distance and Calorie readings will hold while the unit is in the pause mode. After 5 minutes the display will reset and return to the start up screen.
2. To resume your exercise, when in Pause mode, press the Start key. The speed and incline will return to their previous settings.

- Pause is executed when the Stop button is pressed once. If the Stop key is pressed a second time, the program will end and a workout summary will be displayed. If the Stop button is pressed a third time, the console will return to the idle ode (start up) screen. If the Stop button is held down for more than 3 seconds the console will reset.

Incline

1. Incline may be adjusted anytime after belt movement.
2. Press and hold the Incline Up / Down keys to achieve desired gradient. You may also choose a more rapid increase / decrease by selecting the Direct Incline key, then 0 through 12.

- The display will indicate incline percent in increments of .5 as adjustments are made.
- The incline will return to zero unless the main power switch or safety key are turned off while is at a higher setting.

FEATURES

1/4 Mile Track

The 1/4-mile track (one lap) will be displayed around the dot matrix window. The flashing segment indicates your progress. Once the 1/4-mile (Metric - 0.4k) is complete this feature will begin again. The Lap track will move in a counterclockwise direction There is a lap counter in the message window for monitoring your distance.

Pulse Grip Feature

The Pulse (Heart Rate) window will display your current heart rate in beats per minute during the workout. You must use both stainless steel sensors on the stationary grips or the heart rate transmitter chest strap (sold separately) to display your pulse. Pulse value displays anytime the upper display is receiving a Pulse signal. You may not use the Pulse Grip feature while in Heart Rate Programs.

Calorie Display

Displays the cumulative calories burned at any given time during your workout.

Note: This is only a rough guide used for comparison of different exercise sessions, and is not to be used for medical purposes.

Enter / Program Keys

You can press Enter/Program key to enter program and use the Speed Up / Down key to preview what the program profile looks like. Press Enter/Program key to select the program and enter the data setting mode.

The treadmill has a built in heart rate monitoring system. Simply grasping the hand pulse sensors on the stationary handle bars or wearing the heart rate transmitter (sold separately) (see Using Heart Rate Transmitter section)will start the Heart Icon blinking (this may take a few seconds). The Pulse Display Window will display your heart rate, or Pulse in beats per minute.

Programming the Console

Each of the programs can be customized with your personal information and changed to suit your needs. Some of the information is necessary to ensure the readouts are correct. You will be asked for your Age and Weight. Entering your Age is necessary during the Heart Rate programs to ensure the correct predicted target heart rate zone. Entering your Weight aides in calculating a more correct Calorie reading. Although we cannot provide an exact calorie count, we do want to be as close as possible.

CALORIE NOTE: Calorie readings on every piece of exercise equipment, whether it is in a gym or at home, are only an estimate and tend to vary widely. They are meant only as a guide to monitor your progress from workout to workout.

CONSOLE SCREEN - OVERVIEW

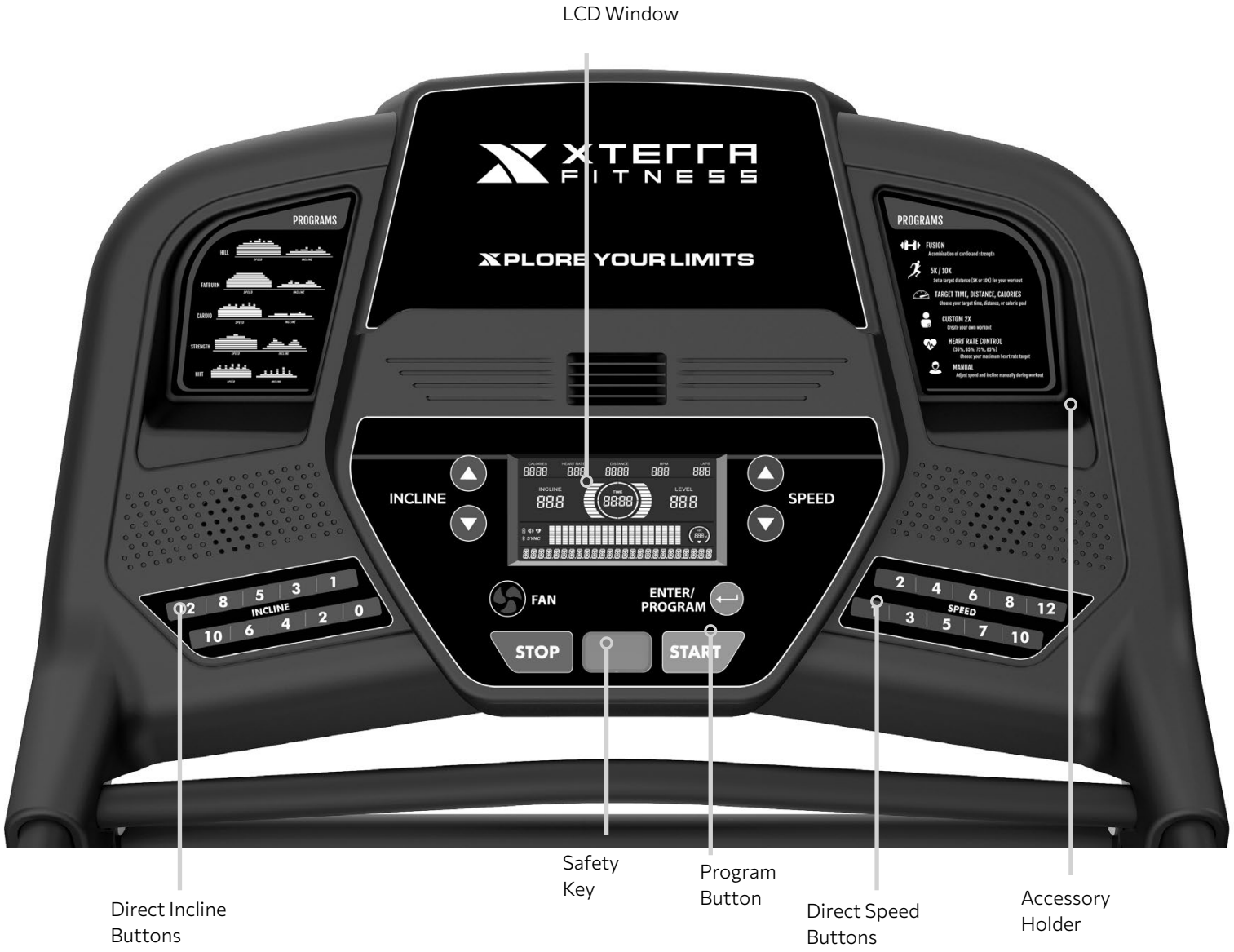

USING THE XF CONNECT APP

In order to help you achieve your exercise goals, your new exercise machine comes equipped with a Bluetooth® transceiver that will allow it to interact with selected phones or tablet computers via the XF Connect App. Just download the free XF Connect App from the Apple Store or Google Play, and then follow the instructions in the App to sync with your exercise machine.

Press the "DISPLAY" button from the APP to view the display of the current workout data. When your exercise is complete, choose "END & SAVE WORKOUT" to store the workout data.

1. Download the App by scanning the QR code on the right.
2. Open the App on your device (phone or tablet) and make sure Bluetooth® is enabled on your device (phone or tablet).
3. In the App click the Bluetooth® icon to search for your XF Connect equipment.
4. Under the Bluetooth® scan result list, select the machine for connect. When the App and equipment are synced, the Bluetooth® icon on the equipment's console display will light up. Click "DISPLAY", you may now start using your XF Connect App.
5. When your exercise is complete, choose "END & SAVE WORKOUT" to store the workout data. You will be prompted to sync your data with each available fitness cloud site. Please note, you will have to download the applicable compatible fitness App, such as Apple Health, Google Fit, Strava, MapMyFitness, Fitbit, etc., in order for the icon to be active and available.

Note: Your device will need to be running on a minimum operating system of IOS 13.1 or Android 8.0 for the XF Connect App to operate properly.

The exercise equipment's Bluetooth device (BLE 5.0) can also be connected to the Bluetooth wireless heart rate chest strap transmitter (BLE 5.0).
The chest strap transmitter can receive signals even when the App is already in use. You can wear the Bluetooth wireless heart rate chest strap (sold separately) first then commence connection. While in connection, the console will show heart rate value via Bluetooth.



QUICK START / MANUAL

1. Press and release the Start key to wake display up (if not already on). Note: Installing the tether key will also wake up the console.
2. Press and release the Start key to begin belt movement, at 0.5 mph, then adjust to the desired speed using the Speed Up / Down key or Fast/Slow keys (console or hand rail). You may also use the Direct Speed Key, then 1 through 12 to adjust the speed.
3. To adjust the speed, press and hold Speed Up / Down keys (console or handgrip keys) to achieve desired speed. You may also adjust to the desired speed by pressing Direct Speed and then 1 through 12.
4. To adjust the Incline level, press and hold the Incline Up / Down key (console or handgrip keys) to achieve desired gradient. You may also adjust to the desired incline by pressing the Direct Incline key and then 0 through 12.
5. To stop the tread-belt press and release the Stop key.

PROGRAMS - TO SELECT AND START A PROGRAM

Entering a Program and Changing Settings

When you enter a program, by pressing a Enter/program key, then Enter/program key, you have the option of entering your own personal settings. If you want to workout without entering new settings, then just press the Start key. This will bypass the programming of data and take you directly to the start of your workout. If you want to change the personal settings then just follow the instructions in the Message Center. If you start a program without changing the settings, the default or saved settings will be used.

NOTE: Age and Weight default settings will change when you enter a new number. So the last Age and Weight entered will be saved as the new default settings. If you enter your Age and Weight the first time you use the treadmill, you will not have to enter it every time you work out unless either your Age or Weight changes, or someone else enters a different Age and Weight.

Each preset program has a maximum Speed and Incline level that is displayed when a desired workout is chosen. The maximum Speed and Incline that the particular program will achieve will be displayed in the Message Center.

PRESET PROGRAMS

To Select and Start a Preset Program

1. You can press Enter/Program key to enter program, Use the Speed Up / Down key to select the program you want (Hill, Fat Burn, Cardio, Strength, or Hiit) . Press Enter/Program to select the program. The display will prompt you through the programming or you can just press Start to begin the program with default values.
2. If Enter/Program was pressed, the Message Center will now be blinking a value, indicating your Age. Entering your correct age affects the heart rate Bar Graph Display and the Heart Rate programs. Use the Up / Down keys to adjust, then press Enter/Program. Your age determines your recommended maximum heart rate. Since the Bar Graph Display and the Heart Rate features are based on a percentage of your maximum heart rate, it is important to enter the correct age for these features to work properly.
3. The Message Center will now be blinking a value, indicating your Body Weight. Entering the correct body weight will affect the calorie count. Use the Up / Down keys to adjust, then press Enter/Program.

A note about the Calorie display: No exercise machine can give you an exact calorie count because there are too many factors which determine exact calorie burn for a particular person. Even if someone is the exact same body weight, age and height, their calorie burn may be very different than yours. The Calorie display is to be used as a reference only to monitor improvement from workout to workout.

4. The Message Center will be blinking a value, indicating Time. You may use any of the Up / Down keys to adjust the time. After adjusting, or to accept the default, press Enter/Program. (Note: You may press Start at any time during the programming to start the program).
5. The Message Center will now be blinking the preset top speed of the selected program. Use the Speed Up / Down keys to adjust, then press Enter/Program. Each program has various speed changes throughout; this allows you to limit the highest speed the program can reach.
6. The Message Center will be blinking the preset top incline of the selected program. Use the Speed Up / Down keys to adjust, then press Enter/Program. You are now done programming data and may press Start to begin your workout or STOP to go back one level to change data entered in the programming phase.

PRESET PROGRAMS

The treadmill has eight different programs that have been designed for a variety of workouts. These eight programs have factory preset work level profiles for achieving different goals.

Hill

This program follows a triangle or pyramid type of gradual progression from approximately 10% of maximum effort (the level that you chose before starting this program) up to a maximum effort which lasts for 10% of the total workout time, then a gradual regression of resistance back to approximately 10% of maximum effort

Incline: The deck elevation is a more gradual and sustained progression. Maximum elevation is in the middle of the workout and lasts for 10% of the duration.

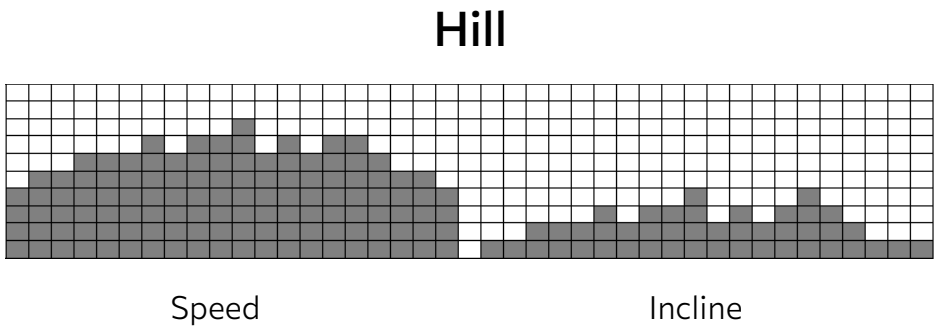

Fat Burn

This program follows a quick progression up to the maximum resistance level (default or user input level) that is sustained for 2/3 of the workout. This program will challenge your ability to sustain your energy output for an extended period of time.

Incline: The deck elevation is a quick and sustained progression up to the maximum value (default or user input) for 90% of the workout duration.

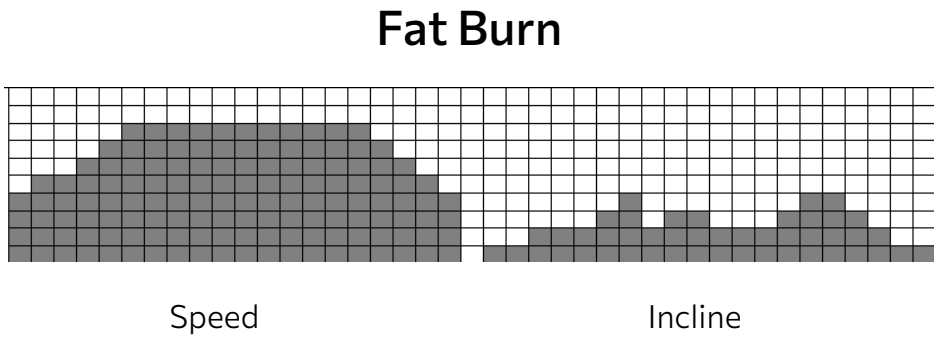

PRESET PROGRAMS

Cardio

This program presents a quick progression up to near maximum resistance level (default or user input level). It has slight fluctuations up and down to allow your heart rate to elevate, and then recover repeatedly, before beginning a quick cool down. This will build up your heart muscle and increase blood flow and lung capacity

Incline: The elevation in this program is moderate. There are several elevation spikes at different points of the workout. Segments 15 are maximum elevation for this program.

Strength

This program has a gradual progression of resistance up to 100% of maximum effort that is sustained for 25% of workout duration. This will help build strength and muscular endurance in the lower body and glutes. A brief cool down follows.

Incline: There is a quick climb to a moderate, sustained elevation that lasts the majority of the workout length.

HIIT

The HIIT program takes you through high levels of intensity followed by periods of low intensity. This program increases your endurance by depleting your oxygen level followed by periods of recovery to replenish oxygen. Your cardiovascular system gets programmed to use oxygen more efficiently this way. This program also forces your body to become more efficient due to spikes in heart rate, between recovery periods. This aids in heart rate recovery from intense activities.

Cardio

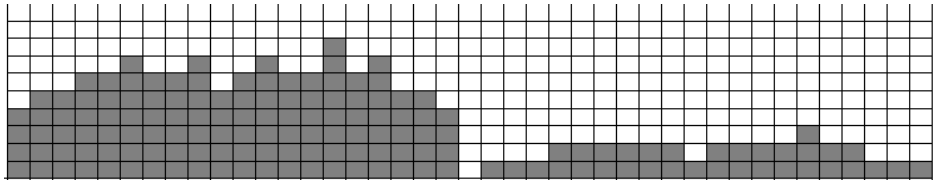

Strength

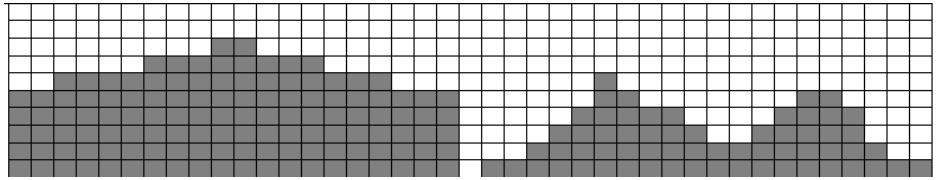

HIIT

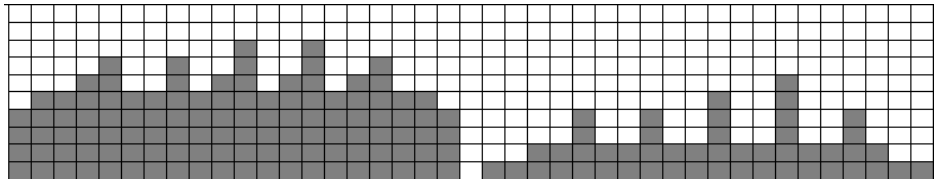

PROGRAMS

Fusion

1. Press the Enter/Program key to enter the program. Use the Speed Up / Down key to select the program you want. The screen will prompt you to program it. You can also press Start to start the program using the default values..
2. If Enter/Program was pressed, the Message Center will now be blinking a value, indicating your Age Entering your correct age affects the heart rate Bar Graph Display and the Heart Rate programs. Use the Up / Down keys to adjust, then press Enter/Program key. Your age determines your recommended maximum heart rate. Since the Bar Graph Display and the Heart Rate features are based on a percentage of your maximum heart rate, it is important to enter the correct age for these features to work properly.
3. The Message Center will now be blinking a value, indicating your Body Weight. Entering the correct body weight will affect the calorie count. Use the Up / Down keys to adjust, then press the Enter/Program key.

   A note about the Calorie display: No exercise machine can give you an exact calorie count because there are too many factors which determine exact calorie burn for a particular person. Even if someone is the exact same body weight, age and height, their calorie burn may be very different than yours. The Calorie display is to be used as a reference only to monitor improvement from workout to workout.
4. The Message Center will now be blinking the preset top speed of the selected program. Use the Speed Up / Down keys to adjust, then press the Enter/Program key. Each program has various speed changes throughout; this allows you to limit the highest speed the program can reach.
5. The Message Center will be blinking the preset top incline of the selected program. Use the Speed Up / Down keys to adjust, then press the Enter/Program key.
6. The message center will now flash the selected program's interval motion (preset to 10), adjust using the Up / Down keys, and then press the Enter/Program key.
7. The information center will now flash the interval of the selected program. (Preset to 1:00), use the Up / Down keys to adjust, then press the Enter/Program key.
8. The information center will now flash the ENTER RECOVERY TIME. (Preset to 0:30), use the Up / Down keys to adjust, then press the Enter/Program keys.
9. You are now done programming data and may press Start to begin your workout or Stop to go back one level to change data entered in the programming phase.

PROGRAMS

5K or 10K Program

1. Press Enter/Program key to enter program. Use the Speed Up / Down key to select 5K PROGRAM OR 10K PROGRAM. Press the Enter/Program to select a program. The display will prompt you to program the program, or you can simply press Start to start the program using the default values.
2. If Enter/Program was pressed, the Message Center will now be blinking a value, indicating your Age. Entering your correct age affects the heart rate Bar Graph Display and the Heart Rate programs. Use the Up / Down keys to adjust, then press Enter/Program. Your age determines your recommended maximum heart rate. Since the Bar Graph Display and the Heart Rate features are based on a percentage of your maximum heart rate, it is important to enter the correct age for these features to work properly.
3. The Message Center will now be blinking a value, indicating your Body Weight.
4. The message window displays “USE SPEED Up / Down KEYS TO ADJUST SPEED”. Use speed Up / Down to adjust speed, and then press Enter/Program.
5. You are now done programming data and may press Start to begin your workout or Stop to go back one level to change data entered in the programming phase.

Countdown Mode

1. Press Enter/Program to enter program. Use the Speed Up / Down keys to select TARGET PROGRAM. Press Enter/Program to confirm. Press Up / Down key to select between TARGET TIME and TARGET DISTANCE and TARGET CALORIES and press Enter/Program to confirm.
2. If Enter/Program was pressed, the Message Center will now be blinking a value, indicating your Age Entering your correct age affects the heart rate Bar Graph Display and the Heart Rate programs. Use the Up / Down keys to adjust, then press Enter/Program. Your age determines your recommended maximum heart rate. Since the Bar Graph Display and the Heart Rate features are based on a percentage of your maximum heart rate, it is important to enter the correct age for these features to work properly.
3. The Message Center will now be blinking a value, indicating your Body Weight.
4. The message window displays the time, distance, and calorie presets to be adjusted, depending on the program you choose. Use the Speed Up / Down key to adjust, then press Enter/Program.
5. You are now done programming data and may press Start to begin your workout or Stop to go back one level to change data entered in the programming phase.

PROGRAMS

Custom Program

1. Press Enter/Program key to enter program. Use the Speed Up / Down key to select CUSTOM PROGRAM. Press Enter/Program key to display CUSTOM1, Press Up / Down key to select CUSTOM2. If you want to select ENTER/Program to confirm.

   Note that the dot matrix display portion will have a single row of dots at the bottom (Unless there is a previously stored program). If there is a program stored under the button that is pressed, it will be retrieved. If not, you have the option of programming in your first name. The Message Window will display and flash the letter "A" . To change it, press the any Up key, then "B" will be displayed; if the any Down key is pressed, the letter "Z" will be displayed. After selecting the appropriate letter, press Enter/Program key. The letter "A" will again be displayed and blinking. Repeat the procedure until all letters of your first name are programmed (7 characters maximum). When your name is displayed, press Stop and it will be stored under either CUSTOM 1 or CUSTOM2.
2. Next the Message Window is flashing Age. Use the Speed Up / Down keys to adjust. Press Enter/Program. This is a must to continue even if age is not adjusted.
3. The Message Window will now be blinking a body weight value. Enter your body weight and press Enter/Program key.
4. The Time Window and Message Window will now be blinking a Time value. Adjust the Time and press Enter/Program key.
5. The first column (segment) will now be blinking. Using the Speed Up / Down keys, adjust the speed level to your desired effort for the first segment then press Enter/Program. The second column will now be blinking. Repeat the above process until all segments have been programmed. The first column will be blinking again. This is for the incline programming. Repeat the above process to program all segments for incline.
6. Press the Start button to begin the workout and also save the program to memory.

   Note: While in a User program, if you change the speed, all segment speeds from there on will also change. Examples: If you increase your current speed 1 mph, the remaining segment speeds will increase by 1 mph. If you decrease your current speed .5 mph, the remaining segment speeds will decrease by .5 mph, etc.

PROGRAMS

Heart Rate Program Operation

Heart rate control program needs to use wireless Bluetooth chest strap transmitter (sold separately), do not use hand heartbeat sensor for heart rate control, must receive a steady intensity signal value in the heartbeat window

1. Press Enter/Program key to enter program. Use the Speed Up / Down key to select HR PROGRAM. Press Enter/Program key to display TARGET HR 55 PERCENT, Press Up / Down key to select between TARGET HR 65 PERCENT, TARGET HR 75 PERCENT, TARGET HR 85 PERCENT. If you want to select ENTER/Program key to confirm.
2. The Message Center will ask you to enter your Age. You may enter your age, using the Speed Up / Down keys, then press the Enter /program key to accept the new value and proceed on to the next screen.
3. You are now asked to enter your Weight. You may adjust the weight value using the Speed Up / Down keys, then press Enter/program to continue.
4. Next is Time. You may adjust the time using the Speed Up / Down keys and press Enter/program to continue.
5. Now you are asked to adjust the Heart Rate Target. This is the heart rate level you will strive to maintain during the program. Adjust the level using the Speed Up / Down keys, then press Enter/program key.

   Note: The heart rate that appears is based on the % you accepted in Step 1. If you change this number it will either increase or decrease the % from Step 1.
6. Now you are finished editing the settings and can begin your workout by pressing the Start key. You can also go back and modify your settings by pressing the Stop key.
7. If you want to increase or decrease the workload at any time during the program press the Speed Up / Down key on the console or right handlebar. This will allow you to change your target heart rate at any time during the program.
8. When the program ends you may press Start to begin the same program again or press Stop to exit the program.

HEART RATE CHEST STRAP* (NOT INCLUDED)

1. Attach the transmitter to the elastic strap using the interlocking key.
2. Adjust the strap as tightly as possible as long as the strap is not too tight to remain comfortable.
3. Position the transmitter with the logo centered in the middle of your torso facing away from your chest (some people must position the transmitter slightly left of center). Attach the final end of the elastic strap by inserting the round end and, using the locking parts, secure the transmitter and strap around your chest.
4. Position the transmitter directly below the pectoral muscles.
5. Sweat is the best conductor to measure very minute heart beat electrical signals. However, plain water can also be used to pre-wet the electrodes (2 ribbed oval areas on the reverse side of the belt and both sides of the transmitter). It's also recommended that you wear the transmitter strap a few minutes before your work out. Some users, because of body chemistry, have a more difficult time in achieving a strong, steady signal at the beginning. After "warming up", this problem lessens.
6. Your workout must be within range - distance between transmitter/receiver – to achieve a strong steady signal. The length of range may vary somewhat but generally stay close enough to the console to maintain good, strong, reliable readings. Wearing the transmitter directly on bare skin assures you of proper operation. If you wish, you may wear the transmitter over a shirt. To do so, wet the areas of the shirt that the electrodes will rest upon.

Note: The transmitter is automatically activated when it detects activity from the user's heart. Additionally, it automatically deactivates when it does not receive any activity. Although the transmitter is water resistant, moisture can have the effect of creating false signals, so you should take precautions to completely dry the transmitter after use to prolong battery life (estimated transmitter battery life is 2500 hours). The replacement battery is Panasonic CR2032.

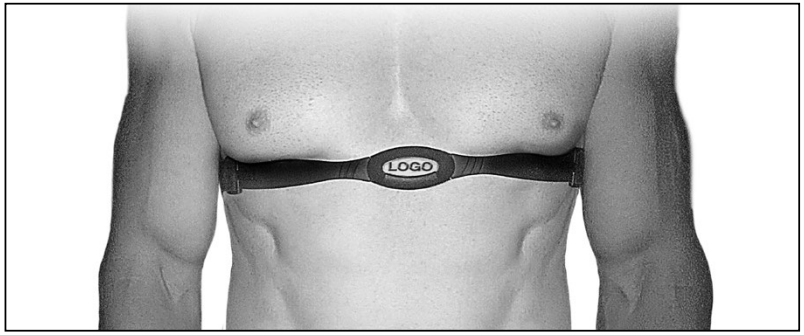

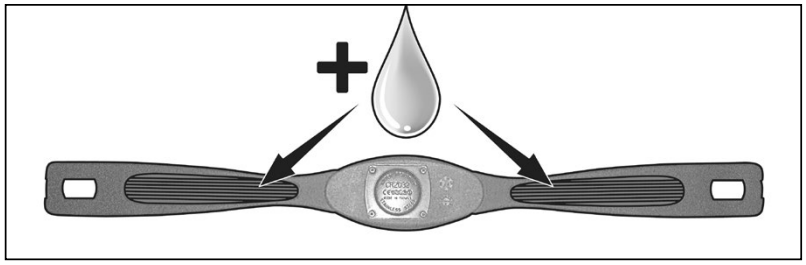

HEART RATE EXERTION

The old motto, “no pain, no gain”, is a myth that has been overpowered by the benefits of exercising comfortably. A great deal of this success has been promoted by the use of heart rate monitors. With the proper use of a heart rate monitor, many people find that their usual choice of exercise intensity was either too high or too low and exercise is much more enjoyable by maintaining their heart rate in the desired benefit range.

To determine the benefit range in which you wish to train, you must first determine your Maximum Heart Rate. This can be accomplished by using the following formula: 220 minus your age. This will give you the Maximum Heart Rate (MHR)for someone of your age. To determine the effective heart rate range for specific goals you simply calculate a percentage of your MHR. Your Heart rate training zone is 50% to 90% of your maximum heart rate. 60% of your MHR is the recommended for burning fat while 80% is recommended for strengthening the cardio vascular system. This 60% to 80% is the zone to stay in for maximum benefit.

For someone who is 40 years old their
target heart rate zone is calculated:
220 – 40 = 180 (maximum heart rate)
180 x .6 = 108 beats per minute (60% of maximum)
180 X .8 = 144 beats per minute (80% of maximum)
So for a 40 year old the training zone would
be 108 to 144 beats per minute.

If you enter your age during programming the console will perform this calculation automatically. Entering your age is used for the Heart Rate programs. After calculating your MHR you can decide upon which goal you would like to pursue.

The two most popular reasons for, or goals, of exercise are cardiovascular fitness (training for the heart and lungs) and weight control. The black columns on the chart represent the MHR for a person whose age is listed at the bottom of each column. The training heart rate, for either cardiovascular fitness or weight loss, is represented by two different lines that cut diagonally through the chart. A definition of the lines’ goal is in the bottom left-hand corner of the chart. If your goal is cardiovascular fitness or if it is weight loss, it can be achieved by training at 80% or 60%, respectively, of your MHR on a schedule approved by your physician. Consult your physician before participating in any exercise program.

With this Spirit Fitness unit you may use the heart rate monitor feature without using the Heart Rate program. However, when using the heart rate monitor feature in conjunction with the Heart Rate programs, the machine will automatically adjust speed or incline to maintain the desired heart rate.

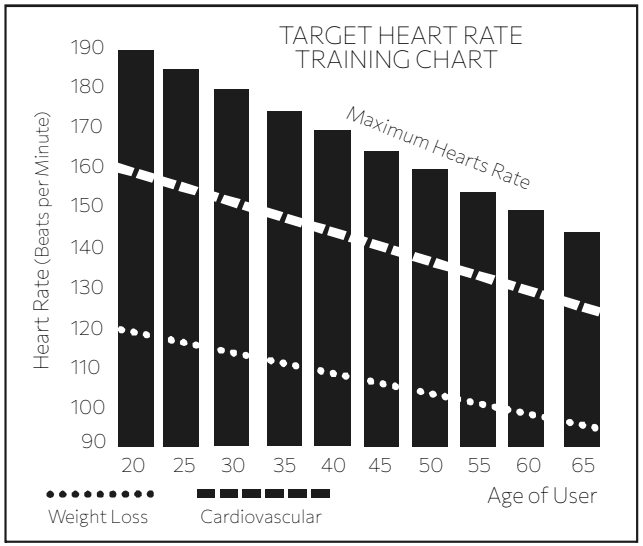

HEART RATE - PERCEIVED EXERTION

Heart rate is important but listening to your body also has a lot of advantages. There are more variables involved in how hard you should workout than just heart rate. Your stress level, physical health, emotional health, temperature, humidity, the time of day, the last time you ate and what you ate all contribute to the intensity at which you should workout. If you listen to your body it will tell you all of these things.

The rate of perceived exertion (RPE), also known as the Borg scale, was developed by Swedish physiologist G.A.V. Borg.
This scale rates exercise intensity from 6 to 20 depending upon how you feel or the perception of your effort.
The scale is as follows:

You can get an approximate heart rate level for each rating by simply adding a zero to each rating. For example a rating of 12 will result in an approximate heart rate of 120 beats per minute. Your RPE will vary depending on the factors discussed earlier. If your body is strong and rested, you will feel strong and your pace will feel comfortable. When your body is in this condition, you are able to train harder and the RPE will support this. If you are feeling tired and sluggish, it is because your body needs a break. In this condition, your pace will feel difficult. Again, this will show up in your RPE and you will train at the proper level for that day.

Rating Perception of Effort	
6	Minimal
7	Very, Very Light
8	Very, Very Light +
9	Very Light
10	Very Light +
11	Fairly Light
12	Comfortable
13	Somewhat Hard
14	Somewhat Hard +
15	Hard
16	Hard +
17	Very Hard
18	Very Hard +
19	Very, Very Hard
20	Maximal

MAINTENANCE & CARE

Lube Message

1. When “Lubricate Deck Press Stop to Clear Message” appears on the LCD, check lubrication under walking belt. (Use a total of 90s hours.) Press STOP key to clear the Lube string or the Lube string is displayed three times to automatically clear the Lube string.

Post-Workout Machine Care

1. Store your machine according to the folding instructions when not in use.
2. Use a slightly damp cloth to clean areas where sweat or oil made contact with the machine.
3. Use a microfiber cloth to clean the display and remove unwanted oils and other things that may damage the screen.
4. Avoid leaving paper or other small debris in the cupholders.

General Cleaning

Dirt, dust, and hair can block air inlets and accumulate on the running belt. Please vacuum underneath your unit on a monthly basis to prevent excess build-up of dirt that can get sucked up and get into the inner workings under the motor cover. Every other month, you should remove the motor cover and carefully vacuum out dirt and hair that may accumulate.

! UNPLUG THE POWER CORD BEFORE THIS TASK.

Sanitizing Your XTERRA Fitness Equipment

- Unupholstered high-contact surfaces (hard plastics) can be sanitized using a 75% isopropyl alcohol solution and a clean, dry cloth. Spray surfaces to be sanitized, and use the dry cloth to wipe clean. Allow surfaces to dry before using.
- For upholstered or soft-plastic surfaces, use a conditioner after sanitizing. Be sure to follow the instructions provided by the conditioner manufacturer to ensure proper use of the conditioner.
- Alternatively, you can make your own spray by mixing the proper ratio of isopropyl alcohol and distilled water to reach a 75% solution.

MAINTENANCE & CARE - CONTINUED

Belt Adjustments

If running belt slips while walking on it, users can adjust tension of the running belt by turning screws on rear rollers of both sides with M6 L Allen Wrench(103), which is included in hardware kit.

PS . During adjustment, while turning rear rollers' screws, be sure to keep running belt tension balanced on both sides, otherwise the belt shifts from higher tension end to the other.

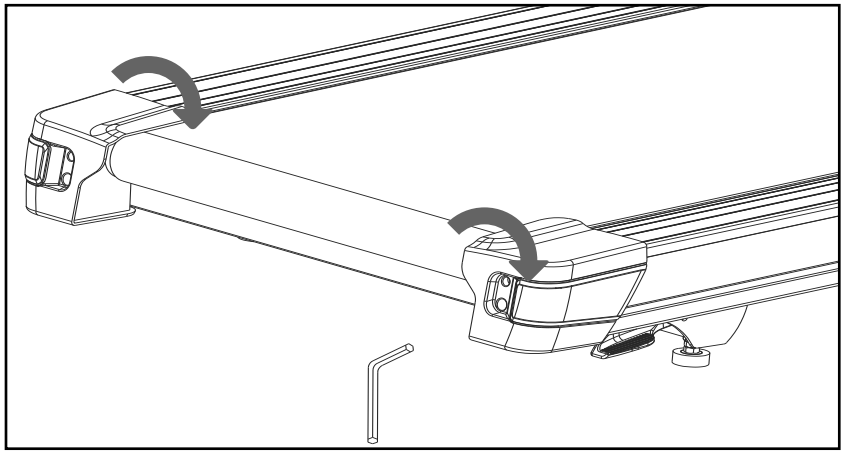

DO NOT OVERTIGHTEN – Over tightening will cause belt damage and premature bearing failure. If you tighten the belt a lot and it still slips, the problem could actually be the drive belt - located under the motor cover - that connects the motor to the front roller. If that belt is loose it feels similar to the walking belt being loose. Tightening the motor belt should be done by a trained service person.

DECK LUBRICATION

To ensure the longevity and proper function of your treadmill, proper belt maintenance is required. You should regularly check between the treadmill belt and the top of the treadmill base for proper lubrication, and to ensure that no dirt or debris has become trapped. Keeping the deck clean and lubricated at the recommended intervals ensures the longest life possible for your unit. Should lubrication dry out, or dirt become trapped, the friction between the belt and deck increases. Increased friction places undue stress on the drive motor, drive belt, and electronic motor control board which could result in catastrophic failure of these essential, expensive components.

Failure to clean and lubricate the deck at regular intervals may void the warranty.

As a part of your routine maintenance schedule, belt lubrication and cleaning should be performed every 90 days, after 90 hours of use, or earlier if you notice that the deck is dry or dirty. Please also be sure to check belt lubrication before first use.

Do not lubricate with anything other than XTERRA Fitness approved lubricant. Your treadmill comes with one tube of treadmill belt lubricant.

Extra tubes can be ordered directly from: www.Xterrafitness.com, or by calling our customer service department at (800)258-8511.

To lubricate your treadmill belt:

1. Turn the power switch off and unplug the power cord from the wall outlet.
2. Measure 18" from the edge of the motor cover; kneel down and reach under the belt approximately 4-6" from one edge. Squirt a line of lubricant about 1/8" wide x 15" long in an "S" pattern perpendicular to the motor cover.
3. Repeat the process on the opposite side.
4. Plug the electrical cord back into the outlet and turn the power switch on.
5. Walk on the belt at a moderate speed for five minutes to evenly distribute the silicone lube.

Regularly check belt lubrication by completing the following steps:

1. Ensure that your machine is off, and that the power cord is unplugged to minimize risk of injury.
2. Reach between the running belt and the top of the treadmill base to verify that lubrication is present.

BELT AND DECK CLEANING & CALIBRATION PROCEDURE

Belt & Deck Cleaning

To clean your treadmill belt:

1. Ensure that your machine is off, and that the power cord is unplugged to minimize risk of injury.
2. Grab one edge of the treadmill belt, and lift slightly to expose the area between the top of the treadmill base and the running belt.
3. Do a visual check for any dirt or debris accumulation.
4. Should dirt and debris be present, slide a towel or cleaning cloth between the treadmill belt and top of the treadmill base until you can grasp one end on each side. (The cleaning cloth should be longer than the running belt is wide to achieve this.)
5. Using both hands, drag the cleaning cloth up and down the length of the treadmill base 1-2 times.
6. For excessive dirt accumulation, rotate the belt halfway, and repeat step 5. Continue until your cleaning cloth is no longer picking up any dirt.
7. Remove cleaning cloth from treadmill before plugging back in.

Calibration Procedure

1. Remove the Safety Key. **DO NOT STAND ON THE BELT DURING CALIBRATION**
2. Press and hold Start and Speed Up buttons and at the same time replace the Safety Key. Continue to hold Start and Speed keys until the window displays “Factory settings”, then press the Enter/ Program key.
3. You will now be able to set the display to show Metric or English settings (Miles vs. Kilometers). To do this, press the incline Up / Down key to show which you want, then press Enter/Program(The maximum speed value is displayed in the speed window, and the maximum elevation value is displayed in the incline window.)
4. Grade return – On (This allows the incline to return to zero when Stop button is pressed. For sale in Europe, EU standards require this to be off)
5. Press Start button to begin calibration. The process is automatic; the speed will start up without warning, so do not stand on the belt.

ENGINEERING MODE MENU

The console has built in maintenance/diagnostic software. The software will allow you to change the console settings from English to Metric and turn off the beeping of the speaker when a key is pressed for example. To enter the Engineering Mode Menu, press and hold down the Start, Stop and Enter keys. Keep holding the keys down for about 5 seconds and the Message Center will display Engineering Mode Menu. Press the Enter key to access the menu below:

1. Key Test (Will allow you to test all the keys to make sure they are functioning)
2. Display Test (Tests all the display functions)
3. Functions (Press Enter to access settings and Speed + or- arrow to scroll)
    - Sleep Mode (Turn on to have the console power down automatically after 15 minutes of inactivity)
    - Pause Mode (Turn on to allow 5 minutes of pause, turn off to have the console pause indefinitely)
    - Maintenance (Reset lube message and odometer readings)
    - Units (Sets the display to readout in English or Metric display measurements)
    - Key Tone (Turns off the speaker so no beeping sound is heard)
    - BEEP (After closing, there is no sound for key operation)
4. Child Lock (Allows you to lock the keypad so no unauthorized use of the machine is allowed. When the child lock is enabled, the console will not allow the keypad to operate unless you press and hold the Child Lock buttons for 3 seconds to unlock the console.)
5. Exit

EXPLODED VIEW DIAGRAM

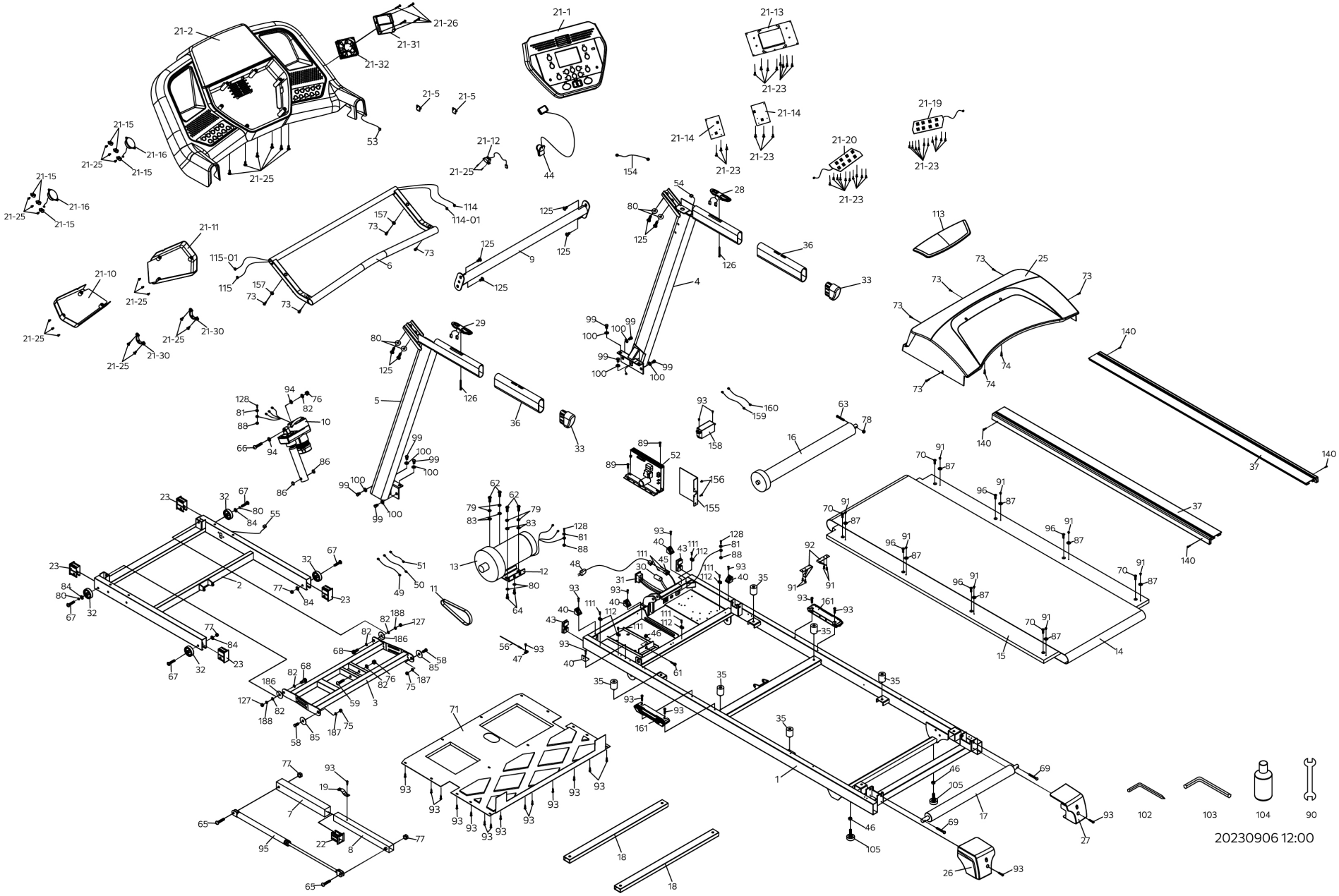

PARTS LIST

1	Main Frame	1
2	Frame Base	1
3	Incline Bracket	1
4	Right Upright	1
5	Left Upright	1
6	Console Support	1
7	Outer Slide	1
8	Inner Slide	1
9	Handrail Support	1
10	Incline Motor	1
11	Drive Belt	1
12	Motor Bracket	1
13	Drive Motor	1
14	Running Belt	1
15	Running Deck	1
16	Front Roller W/Pulley	1
17	Rear Roller	1
18	Deck Cross Brace	2
19	Sliding Tube Spring	1
21	Console Assembly	1
21-01	Console Inner Cover	1
21-02	Console Outer Cover	1
21-05	Square Magnet Stop Plate	2
21-10	Speaker Cover (L)	1
21-11	Speaker Cover (R)	1
21-12	Safety Switch Module W/ Cable	1

21-13	Console Display Board	1
21-14	Key Board	2
21-15	Speaker Grill Anchor	6
21-16	Speaker W/Cable	2
21-19	Quick Speed Board	1
21-20	Quick Incline Board	1
21-23	2.3 × 6mm_Sheet Metal Screw	34
21-25/74	3.5 × 12mm_Sheet Metal Screw	26
21-26	3.5 × 50mm_Sheet Metal Screw	4
21-30	Beverage Holder Anchor	2
21-31	Wind Duct	1
21-32	Fan Assembly	1
22	Anti-Colliding Plug	1
23	End Cap	4
25	Motor Top Cover	1
26	Adjustment Base (L)	1
27	Adjustment Base (R)	1
28	Speed/Hand Pulse Complex	1
29	Incline/Hand Pulse Complex	1
30	Breaker	1
31	AC Electronic Module	1
32	Transportation Wheel	4
33	Square End Cap	2
35	Cushion	6
36	Handgrip Foam	2
37	Foot Rail	2
40	Motor Cover Anchor(D)	5

PARTS LIST

43	Square End Cap	2
44	Square Safety Key	1
45	Power Socket	1
46	3/8" × 7T_Nut	3
47	Sensor Rack	1
48	Power Cord	1
49	300mm_Connecting Wire (White)	1
50	300mm_Connecting Wire (Black)	1
51	100mm_Connecting Wire (Black)	1
52	Motor Controller	1
53	1000mm_Computer Cable (Upper)	1
54	1250mm_Computer Cable (Middle)	1
55	1200mm_Computer Cable (Lower)	1
56	Sensor W/Cable	1
58	1/2" × 1"_Hex Head Bolt	2
59	3/8" × UNC16 × 3-1/4"_Hex Head Bolt	1
61	3/8" × 1-1/2"_Hex Head Bolt	1
62	3/8" × 3/4"_Hex Head Bolt	4
63	M8 × 60mm_Hex Head Bolt	1
64	M8 × P1.25 × 12mm_Hex Head Bolt	2
65	5/16" × UNC18 × 3"_Button Head Socket Bolt	2
66	3/8" × UNC16 × 1-3/4"_Hex Head Bolt	1
67	5/16" × 1-1/2"_Flat Head Socket Bolt	4
68	M10 × 25mm_Socket Head Cap Bolt	2
69	M8 × 80mm_Socket Head Cap Bolt	2

70	M8 × 25mm_Flat Head Countersink Bolt	4
71	Motor Bottom Cover	1
73	5 × 16mm_Tapping Screw	9
75	1/2" × 8T_Nylon Nut	2
76	3/8" × 7T_Nylon Nut	2
77	5/16" × 7T_Nylon Nut	4
78	M8 × 7T_Nylon Nut	1
79	Ø10 × 2.0T_Split Washer	4
80	Ø8 × 1.5T_Split Washer	8
81	Ø5 × 1.5T_Split Washer	3
82	Ø3/8"× Ø19 × 1.5T_Flat Washer	6
83	Ø3/8" × Ø25 × 2.0T_Flat Washer	4
84/100	Ø5/16" × Ø18 × 1.5T_Flat Washer	12
85	Nylon Washer (B)	2
86	Nylon Washer (A)	2
87	Ø25 × Ø20 × Ø16 × Ø5 × 4.5H × 1.1T_Concave Washer	8
88	M5_Star Washer	3
89	Ø5 × 32mm_Tapping Screw	2
90	13m/m_Wrench	1
91	4 × 12mm_Sheet Metal Screw	12
92	Belt Guide	2
93	Ø5 × 16mm_Tapping Screw	29
94	Ø10 × Ø25 × 0.8T_Nylon Washer	2
95	Cylinder	1
96	M8 × 50mm_Flat Head Countersink Bolt	4
99	5/16"× 3/4"_Hex Head Bolt	8

PARTS LIST

102	M5_Allen Wrench Head Screw Wrench	1
103	M6_L Allen Wrench	1
104	Lubricant	1
105	Adjustment Foot Pad	2
111	3.5 × 16mm_Tapping Screw	7
112	Wire Tie Mount	5
113	Top Motor Cover Plate	1
114	1000m/m_Speed Cable (Upper)	1
114-01	1000m/m_Handpulse Wire (Upper)	1
115	1000m/m_Incline Cable (Upper)	1
115-01	1000m/m_Handpulse Wire (Upper)	1
125	5/16" × 3/4"_Button Head Socket Bolt	8
126	3 × 65mm_Sheet Metal Screw	2
127	M10 × 8T_Nylon Nut	2
128	M5 × 10mm_Phillips Head Screw	3
140	Ø4 × 19mm_Sheet Metal Screw	4
154	1000mm_Ground Wire	1
155	Controller Back Plate	1
156	3 × 8mm_Sheet Metal Screw	2
157	Ø1/4" × 19 × 1.5T_Flat Washer	2
158	Filter	1
159	200mm_Connecting Wire (White)	1
160	200mm_Connecting Wire (Black)	1
161	Cushion Spacer	2
186	Ø40 × 3T_Nylon Washer	2
187	Ø1/2" × 2.0T_Split Washer	2
188	Ø10 × 1.5T_Split Washer	2

WARRANTY - RESIDENTIAL

Effective June 07 2024- **TR75 Treadmill LIMITED WARRANTY**

XTERRA Fitness Inc. warrants all its home use treadmill parts for a period of time listed below, from the date of retail sale, as determined by a sales receipt or in the absence of a sales receipt, eighteen (18) months from the original factory shipping date. XTERRA Fitness's responsibilities include providing new or remanufactured parts, at XTERRA Fitness's option, and technical support to our independent dealers and servicing organizations. In the absence of a dealer or service organization, these warranties will be administered by XTERRA Fitness directly to a consumer. The warranty period applies to the following components:

Home Use Limited Warranty

Warranty	Frame	Motor	Parts	Labor
Residential	Lifetime	Lifetime	2 Years	1 Year

RESPONSIBILITIES OF THE CONSUMER

This warranty applies only to products in ordinary household use, and the consumer/facility is responsible for the items listed below:

1. Proper use of the treadmill in accordance with the instructions provided in this manual
2. Proper installation in accordance with instructions provided with the treadmill and with all local electric codes.
3. Expenses for making the treadmill accessible for servicing, including any item that was not part of the treadmill at the time it was shipped from the factory.
4. Damages to the treadmill finish during shipping, installation or following installation.
5. Routine maintenance of this unit as specified in this manual.

WARRANTY - CONTINUED

What is not covered?

EXCLUSIONS

This warranty does not cover the following:

1. CONSEQUENTIAL, COLLATERAL, OR INCIDENTAL DAMAGES SUCH AS PROPERTY DAMAGE AND INCIDENTAL EXPENSES RESULTING FROM ANY BREACH OF THIS WRITTEN OR ANY IMPLIED WARRANTY.
   Note: Some states do not allow the exclusion or limitation of incidental or consequential damages, so this limitation or exclusion may not apply to you.
2. Service call reimbursement to the consumer. Service call reimbursement to the dealer that does not involve malfunction or defects in workmanship or material, for units that are beyond the warranty period, for units that are beyond the service call reimbursement period, for treadmill not requiring component replacement, or treadmill not in ordinary household or light commercial use.
3. Damages caused by services performed by persons other than authorized XTERRA Fitness service companies; use of parts other than original XTERRA Fitness parts; or external causes such as corrosion, discoloration of paint or plastic, alterations, modifications, abuse, misuse, accident, improper maintenance, inadequate power supply, or acts of God.
4. Products with original serial numbers that have been removed or altered.
5. Products that have been: sold, transferred, bartered, or given to a third party.
6. XTERRA Fitness reserves the right to request proof of purchase if no warranty record exists for the product.
7. THIS WARRANTY IS EXPRESSLY IN LIEU OF ALL OTHER WARRANTIES EXPRESSED OR IMPLIED, INCLUDING THE WARRANTIES OF MERCHANTABILITY AND/OR FITNESS FOR A PARTICULAR PURPOSE.
8. Product use in any environment other than a residential setting or non-dues paying facility with 5 hours use or less per day.
9. Warranties outside of the United States may vary. Please contact your local dealer for details.

Product features or specifications as described or illustrated are subject to change without notice. All warranties are made by XTERRA Fitness, Inc. This warranty applies only in the 48 contiguous United States. NOTE: This does not include Alaska or Hawaii.

WARRANTY - CONTINUED

Responsibilities of the Owner

SERVICE

Keep your bill of sale. Twelve (12) months from the date on the bill of sale or eighteen (18) months from the date of factory shipping as determined by the serial number establishes the labor warranty period should service be required. If service is performed, it is in your best interest to obtain and keep all receipts. This written warranty gives you specific legal rights. You may also have other rights that vary from state to state. Service under this warranty must be obtained by following these steps, in order:

1. Contact your selling authorized XTERRA Fitness dealer. OR
2. Contact your local authorized XTERRA Fitness service organization.
3. If there is a question as to where to obtain service, contact our service department at (870) 935-1107.
4. XTERRA Fitness' obligation under this warranty is limited to repairing or replacing, at XTERRA Fitness' option, the product through one of our authorized service centers. All repairs must be preauthorized by XTERRA Fitness. If the product is shipped to a service center freight charges to and from the service center will be the customer's responsibility. For replacement parts shipped while the product is under warranty, the customer will be responsible for shipping and handling charges. For in-home service, the customer will be responsible for a trip charge. There will be an additional trip charge if the customer is located over 100 miles from the nearest service center.
5. The owner is responsible for adequate packaging upon return to XTERRA Fitness. XTERRA Fitness is not responsible for damages in shipping. Make all freight damage claims with the appropriate freight carrier. DO NOT SHIP ANY UNIT TO OUR FACTORY WITHOUT A RETURN AUTHORIZATION NUMBER. All units arriving without a return authorization number will be refused.

For any further information, or to contact our service department by mail, send your correspondence to:

XTERRA Fitness, Inc.

P.O. Box 2037

Jonesboro, AR 72402-2037

Product features or specifications as described or illustrated are subject to change without notice. All warranties are made by XTERRA Fitness, Inc. This warranty applies only in the 48 contiguous United States. NOTE: This does not apply to Alaska or Hawaii.

TROUBLESHOOTING

Service Checklist Diagnosis Guide

Problem	**Solution/ Cause**
Display does not light	1. Tether cord not in position. 2. Circuit breaker on front grill tripped. Push circuit breaker in until it locks. 3. Plug is disconnected. Make sure plug is firmly pushed into AC wall outlet. 4. Breaker panel circuit breaker may be tripped. 5. Treadmill defect. Contact your dealer.
Tread-belt does not stay centered Treadmill belt hesitates when walked/ run on	The user may be walking while favoring or putting more weight on either the left or right foot. If this walking pattern is natural, track the belt slightly off-center to the side opposite from the belt movement. See the Maintenance & Care section on Tread-belt Tension. Adjust as necessary.
Motor is not responsive after pressing start	If you press Start and the belt never moves, contact service.
Treadmill will only achieve approximately 5 mph but shows higher on the display	This indicates motor should be receiving power to operate. Low AC voltage to treadmill. Do not use an extension cord. If an extension cord is required it should be as short as possible and heavy duty 14 gauge minimum. Low voltage. Contact an electrician or your dealer. A minimum of 120 volt AC current is required.
Tread-belt stops quickly/suddenly when tether cord is pulled	High belt/deck friction. See Belt and Deck cleaning and Deck Lubrication on cleaning the deck.
Treadmill trips on board 15 amp circuit	High belt/deck friction. See Belt and Deck cleaning and Deck Lubrication on cleaning the deck.
Computer shuts off when console is touched (on a cold day) while walking/running	Treadmill may not be grounded. Static electricity is “crashing” the computer. Refer to Grounding Instructions.
Circuit breaker trips, but not the treadmill circuit breaker	Check that the treadmill is the only appliance in the circuit. See “Electrical Safety” section for more details.

3000 Nestle Road Jonesboro, AR 72401 | Phone: 800-258-8511 | Fax: 870-935-7611

©2026 All Rights Reserved. TR75 Owner's Manual