XTERRA FITNESS

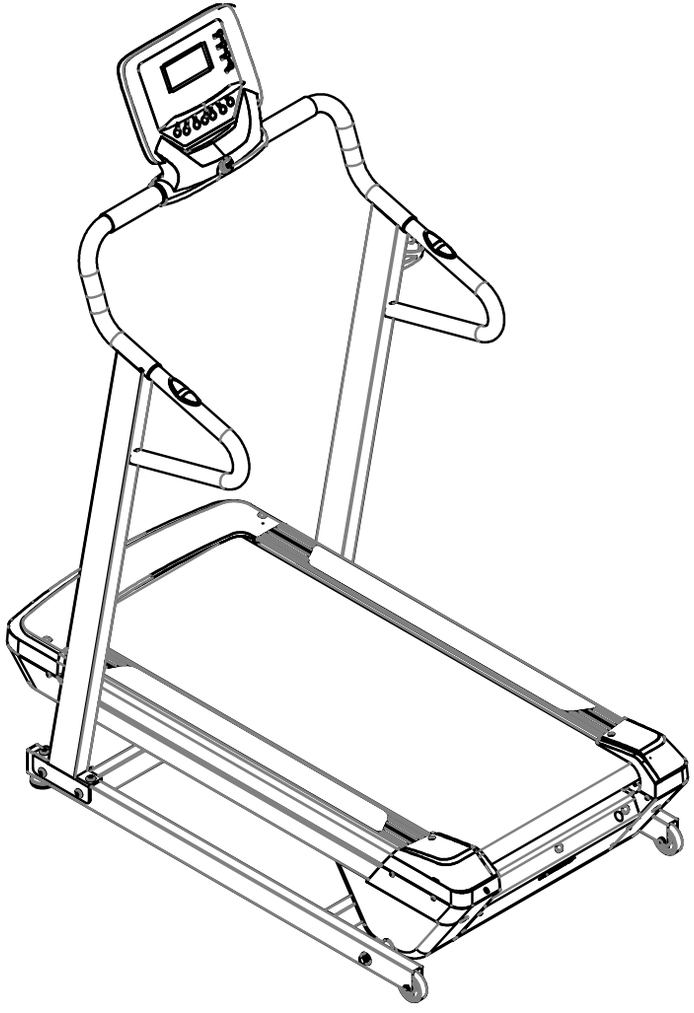

TR75H HIKER TREADMILL

TR75H_OwnersManual_175825_20250819

Online Support

If you require assistance or are experiencing issues with your XTERRA Machine, please contact customer care for additional help.

1-800-258-8511

questions@xterrafitness.com

Warranty Registration

Scan to quickly and easily register your new XTERRA Fitness machine.

Table of Contents

Product Registration 3
Warning / Safety Instructions
Product Labels 4
Safety Instructions 5
Electrical Safety 6
Grounding & Location Requirements 7
Parts and Assembly
Parts of your Unit 8
Parts Included 9
Assembly 11
Setting Up Your Unit 16
Safety Key 18
Technology and Features
About Your Machine 19
Console Screen - Overview 20
Console Features 21
Quick Start 26
Programs
Programs 27
Preset Programs 30
Wearing the Chest Strap 34
Heart Rate Exertion 35
Maintenance
Maintenance & Care 37
Deck Lubrication 41
Belt & Deck 43
Exploded View Diagram 44
Warranty & Troubleshooting
Warranty 45
Troubleshooting 48

PRODUCT REGISTRATION

Congratulations on your new Hiker Treadmill, and welcome to the XTERRA Fitness family!

Thank you for your purchase of this quality unit from XTERRA Fitness. Your new unit was manufactured by one of the leading fitness manufacturers in the world and is backed by one of the most comprehensive warranties available. XTERRA Fitness will do all we can to make your ownership experience as pleasant as possible for many years to come.

If you have questions, or if parts are missing or damaged, or you require customer service, call (870) 336-4286. Please have your model number and serial number handy when you call.

Please take a moment at this time to record the name of the dealer, their telephone number, and the date of purchase below to make any future, needed contact easy. We appreciate your support and we will always remember that you are the reason that we are in business.

Serial Number	
Date of Purchase	
Dealer / Place of Purchase	

WARRANTY REGISTRATION

Use your smartphone to scan the QR code above to quickly and easily register your new XTERRA Fitness machine.

You can also go to **xterrafitness.com/warranty** under the Support tab to register online.

Version: 1.0
Revision: 08/19/25

PRODUCT LABELS





SERIAL NUMBER STICKER

This sticker will be found on the frame near the power switch. Please record the number below the barcode for the purpose of registering your Hiker Treadmill's warranty.



PROPOSITION 65 WARNING

This sticker will be found on the frame near the power switch. The State of California requires us to inform you that this unit was manufactured using chemicals that could cause harm with improper use.



SAFETY WARNING STICKER

This sticker will be found on the interior side of your Hiker Treadmill's upright. The same warning can be found in this manual. Please read and be aware of the precautions before operating your unit.

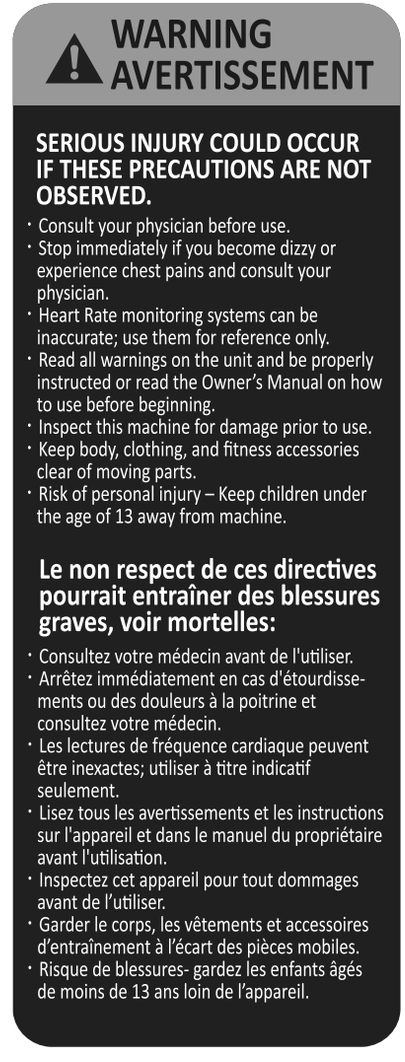

SAFETY INSTRUCTIONS

When using an electrical appliance, basic precautions should always be followed, including the following:
Read all instructions before using this appliance.

DANGER - To reduce the risk of electric shock:
Always unplug this appliance from the electrical outlet immediately after using and before cleaning.

WARNING - To reduce the risk of burns, fire electric shock, or injury to persons:

1. An appliance should never be left unattended when plugged in. Unplug from outlet when not in use, and before putting on or taking off parts.
2. Do not operate under blanket or pillow. Excessive heating can occur and cause fire, electric shock, or injury to persons.
3. This exercise equipment is not intended for use by persons with reduced physical, sensory or mental capabilities, or lack of experience and knowledge.
4. Use this appliance only for its intended use as described in this manual. Do not use attachments not recommended by the manufacturer.
5. Never operate this appliance if it has a damaged cord or plug, if it is not working properly, if it has been dropped or damaged, or dropped into water. Return the appliance to a service center for examination and repair.
6. Do not carry this appliance by supply cord or use cord as a handle.
7. Keep the cord away from heated surfaces.
8. Never operate the appliance with the air openings blocked. Keep the air openings free of lint, hair, and the like.
9. Never drop or insert any object into any opening.
10. Do not use outdoors.
11. Do not operate where aerosol (spray) products are being use or where oxygen is being administered.
12. Connect this appliance to a properly grounded outlet only. See Grounding Instructions.
13. The appliance is intended for household use.
14. To disconnect, turn all controls to the off position, then remove the plug from the outlet.
15. Do not operate equipment on deeply padded, plush or shag carpet. Damage to both carpet and equipment may result.
16. Before beginning this or any exercise program, consult a physician. This is especially important for persons over the age of 35 or persons with pre-existing health conditions.
17. Keep hands away from all moving parts.
18. The pulse sensors are not medical devices. Various factors, including the user's movement, may affect the accuracy of heart rate readings. The pulse sensors are intended only as exercise aids in determining heart rate trends in general.
19. Do not attempt to use your equipment for any purpose other than for the purpose it is intended.
20. Do not operate tablet or laptop when you are running, walking or climbing at high speed.
21. Wear proper shoes. High heels, dress shoes, sandals or bare feet are not suitable for use on your equipment. Quality athletic shoes are recommended to avoid leg fatigue.
22. **User Weight Limit: 265 lb.**

Please ensure that you review and adhere to the user weight restrictions and power requirements of your new machine. Failure to do so may result in serious injury or damage to your machine.

ELECTRICAL SAFETY

WARNING!

Route the power cord away from any moving part of the unit including the elevation mechanism and transport wheels.

NEVER remove any cover without first disconnecting AC power. If voltage varies by ten percent (10%) or more, the performance of your unit may be affected. **Such conditions are not covered under your warranty.** If you suspect the voltage is low, contact your local power company or a licensed electrician for proper testing.

NEVER expose this unit to rain or moisture. This product is **NOT** designed for use outdoors, near a pool or spa, or in any other high humidity environment. The temperature specification is 40 degrees C, and humidity is 95%, non-condensing (no water drops forming on surfaces).

Circuit breakers: Avoid AFCI/GFCI circuit breakers if possible. These breakers may trip occasionally during exercise because of the high inrush currents of the unit drive electronics and motor. This is an issue that affects all unit brands. New laws in your area may require these breakers. If you do have these breakers and outlets in your home, and are experiencing nuisance tripping, you should check if there are any other devices plugged into the same circuit. Some examples of devices that may also cause tripping are fluorescent lights with electronic ballasts, coffee maker, space heater, hair drier.

Optimally the unit should be the only device plugged into the circuit. Our units have surge suppressors built in to help avoid nuisance tripping. We have tested several AFCI/GFCI breakers and outlets with our products. Brands we have tested are: Eaton (Cutler Hammer Series), Leviton (Smart lock pro) and Schneider Electric (Canadian home series). These breakers do not trip in our testing, when connected to our units, as long as no other devices are plugged into the same circuit.

- **NEVER** operate this unit without reading and completely understanding the results of any operational change you request from the computer.
- Understand that changes in speed and incline do not occur immediately. Set your desired work level on the computer console and release the adjustment key. The computer will obey the command gradually.
- **NEVER** use your unit during an electrical storm. Surges may occur in your household power supply that could damage unit components. Unplug the unit during an electrical storm as a precaution.
- Use caution while participating in other activities while walking on your unit; such as watching television, reading, etc. These distractions may cause you to lose balance which may result in serious injury.
- Do not use excessive pressure on console control keys. They are precision set to function properly with little finger pressure.

GROUNDING & LOCATION REQUIREMENTS

This product must be grounded. If the unit should malfunction or breakdown, grounding provides a path of least resistance for electric current, reducing the risk of electric shock. This product is equipped with a cord having an equipment-grounding plug. The plug must be plugged into an appropriate outlet that is properly installed and grounded in accordance with all local codes and ordinances.

DANGER - Improper connection of the equipment-grounding conductor can result in a risk of electric shock. Check with a qualified electrician or serviceman if you are in doubt as to whether the product is properly grounded. Do not modify the plug provided with the product if it will not fit the outlet; have a proper outlet installed by a qualified electrician.

This product is for use on a nominal 120-volt circuit, and has a grounding plug that looks like the plug illustrated below. A temporary adapter that looks like the adapter illustrated below may be used to connect this plug to a 2-pole receptacle as shown below if a properly grounded outlet is not available. The temporary adapter should be used only until a properly grounded outlet, (shown below) can be installed by a qualified electrician. The green colored rigid ear-lug, or the like, extending from the adapter, must be connected to a permanent ground such as a properly grounded outlet box cover. Whenever the adapter is used, it must be held in place by a metal screw.

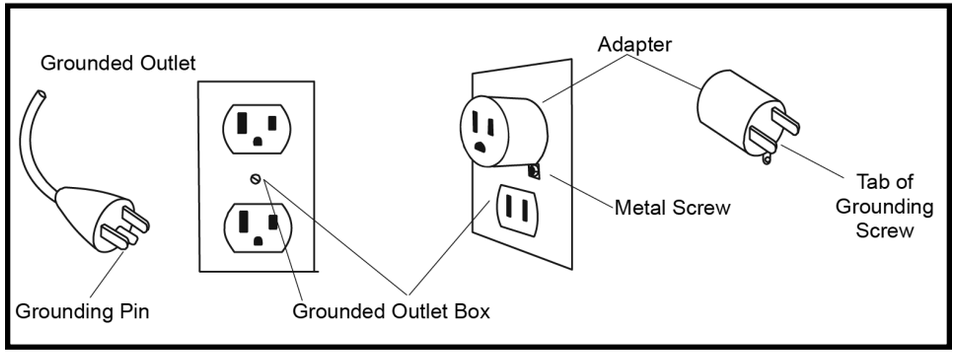

Location Requirements

After assembling your Hiker Treadmill, you'll need to make sure you've installed it in a safe area.

- We recommend that you leave an area of at least 24in on the front, and sides of your machine. The front of the unit is where the motor is located.
- We recommend that you leave an area of at least 6ft behind the Hiker Treadmill.
- Install your Hiker Treadmill in an area where children and pets cannot access it.
- Always keep the area around your Hiker Treadmill clear of furniture, exercise equipment and other debris.
- Do not install your Hiker Treadmill on deeply padded, plush, or shag carpet.

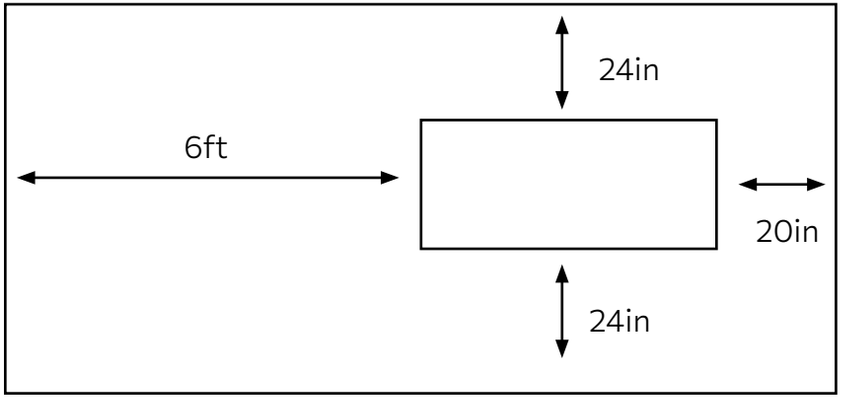

PARTS OF YOUR UNIT

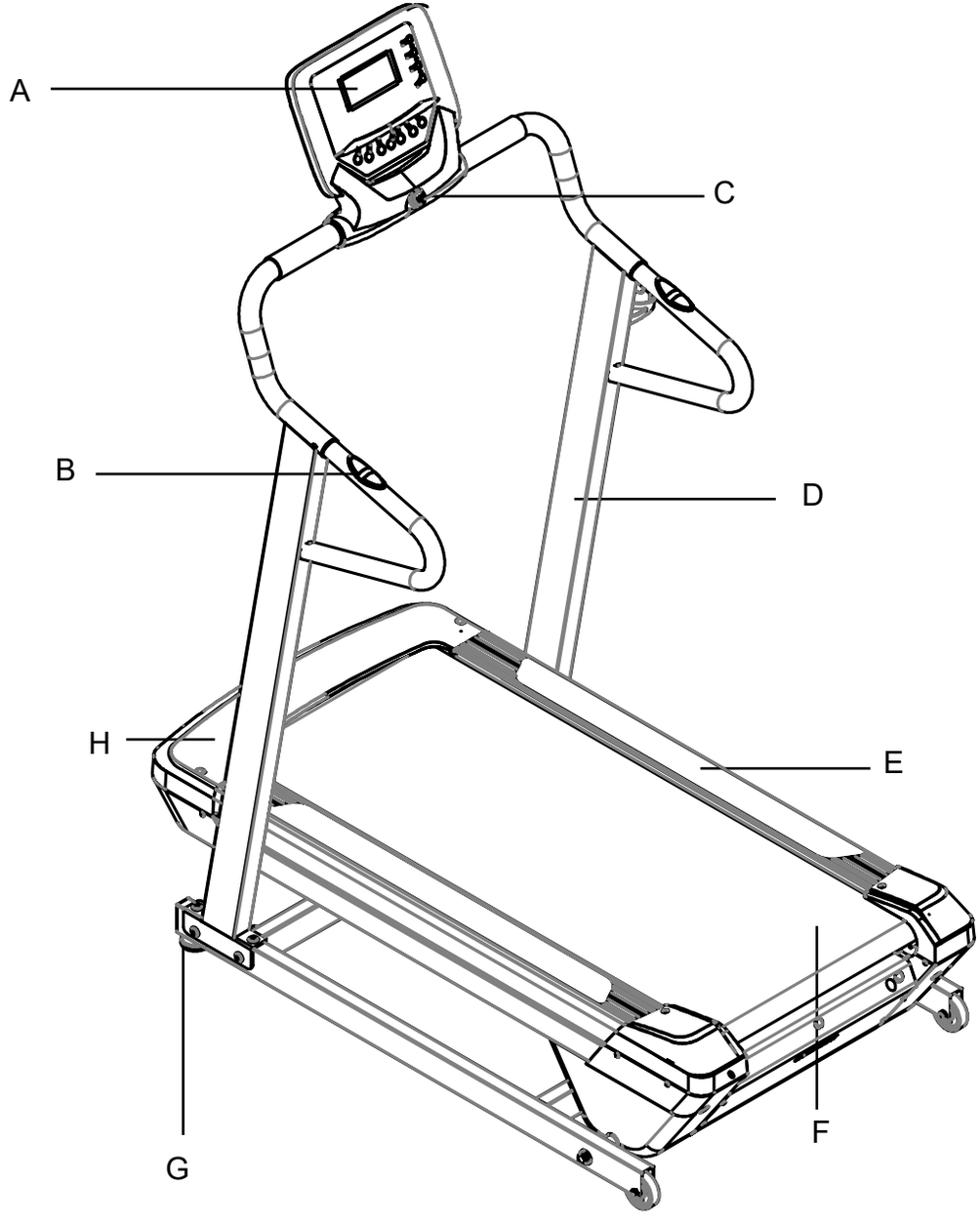

A. LCD Window
B. Hand Pulse Grips
C. Safety Key
D. Upright
E. Side Rails
F. Belt
G. Leveler
H. Motor

PARTS INCLUDED

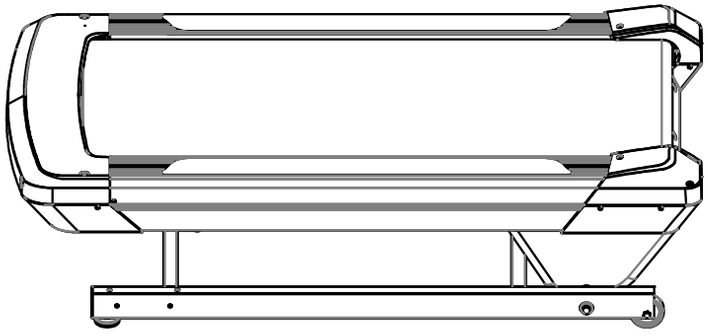

#1 Main Frame 1 pc

#2 Front Post 1 pc

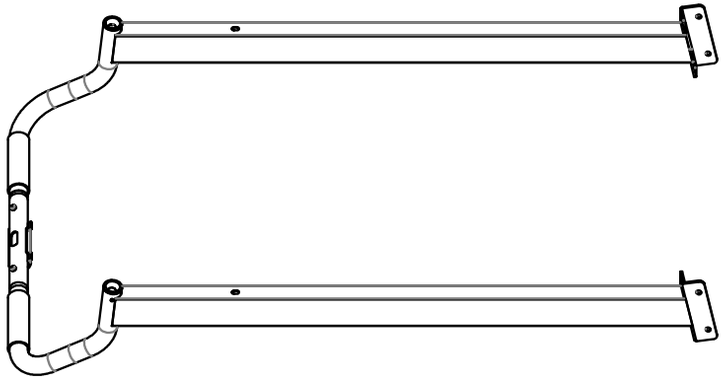

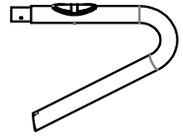

#3 Right Handlebar 1 pc
(BOM Part No. 51)

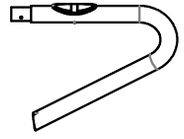

#4 Left Handlebar 1 pc
(BOM Part No. 51)

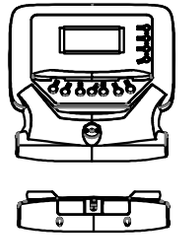

#5 Console Set 1 set
(BOM Part No.110, No.e)



#6 Bottle Holder 1 pc
(BOM Part No.105)

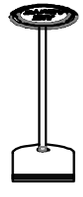

#7 Safety Key 1 pc
(BOM Part No.111)

PARTS INCLUDED



#8 Console Angle Andjusting Knob 1 pc
(BOM Part No.107)

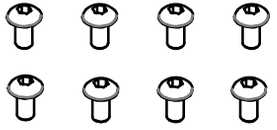

#9 Bolt M8 x 15 L x 8 pcs
(BOM Part No.25)



#10 Washer 8.2 x 18 x1.6t x 10 pcs
(BOM Part No.12)

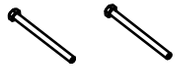

#11 Bolt M8 x 100 L x 2 pcs
(BOM Part No.44)



#12 Screw ø5 x 15 x 2 pcs
(BOM Part No.45)



#13 Screw M4 x 10L x 2 pcs
(BOM Part No.106)



#14 Washer ø8.5 x ø20 x 2.5t x 1 pc
(BOM Part No.108)

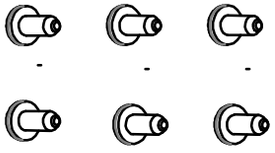

#15 Screw ø4 x 10L x 6 pcs
(BOM Part No.109)

ASSEMBLY - STEP ONE

1. 2 people are required for assembly. Before beginning, note the end with the wire on the **Front Post (#2)** is for the right side of the **Main Frame (#1)**. Have one person hold the **Front Post (#2)** and the other connect the wire from the **Main Frame (#1)** and **Front Post (#2)**. Next, tuck the connector into the tube of the main frame.
2. Use **Bolts (#9)** and **Washer (#10)** to fix **Front Post (#2)** on the **Main Frame (#1)**.

Please make sure not to damage the wire and connector while assembling.

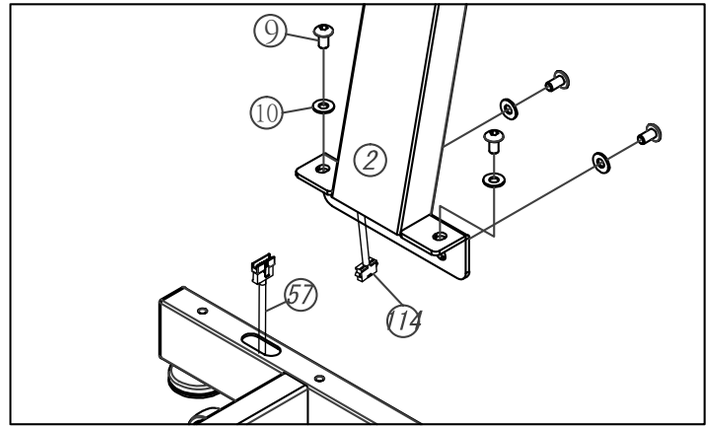

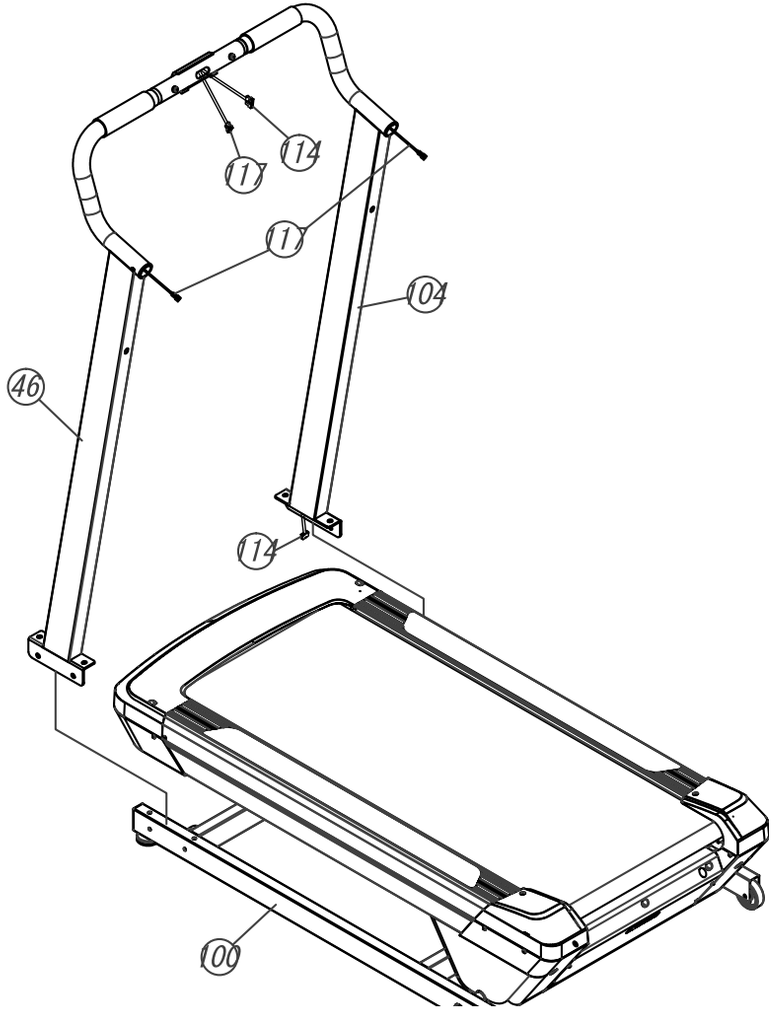

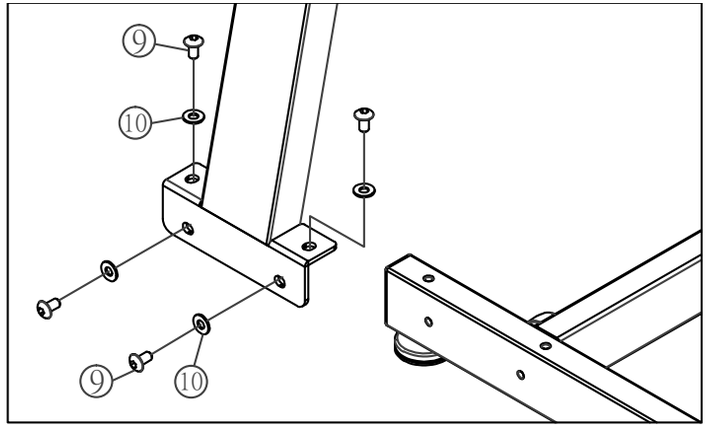

ASSEMBLY - STEP TWO

1. Connect pulse wires from the **Front Post (#2)** and the **Handlebars (#3 & #4)**. Then use **Bolt (#12)** to fix the upper side of the **handlebars (#3 & #4)**. Use **Bolt (#11)** and **Washer (#10)** to fix the bottom side of the **Handlebars (#3 & #4)** to the **Front Post (#2)**.

   Please make sure not to damage the wire and connector while assembling

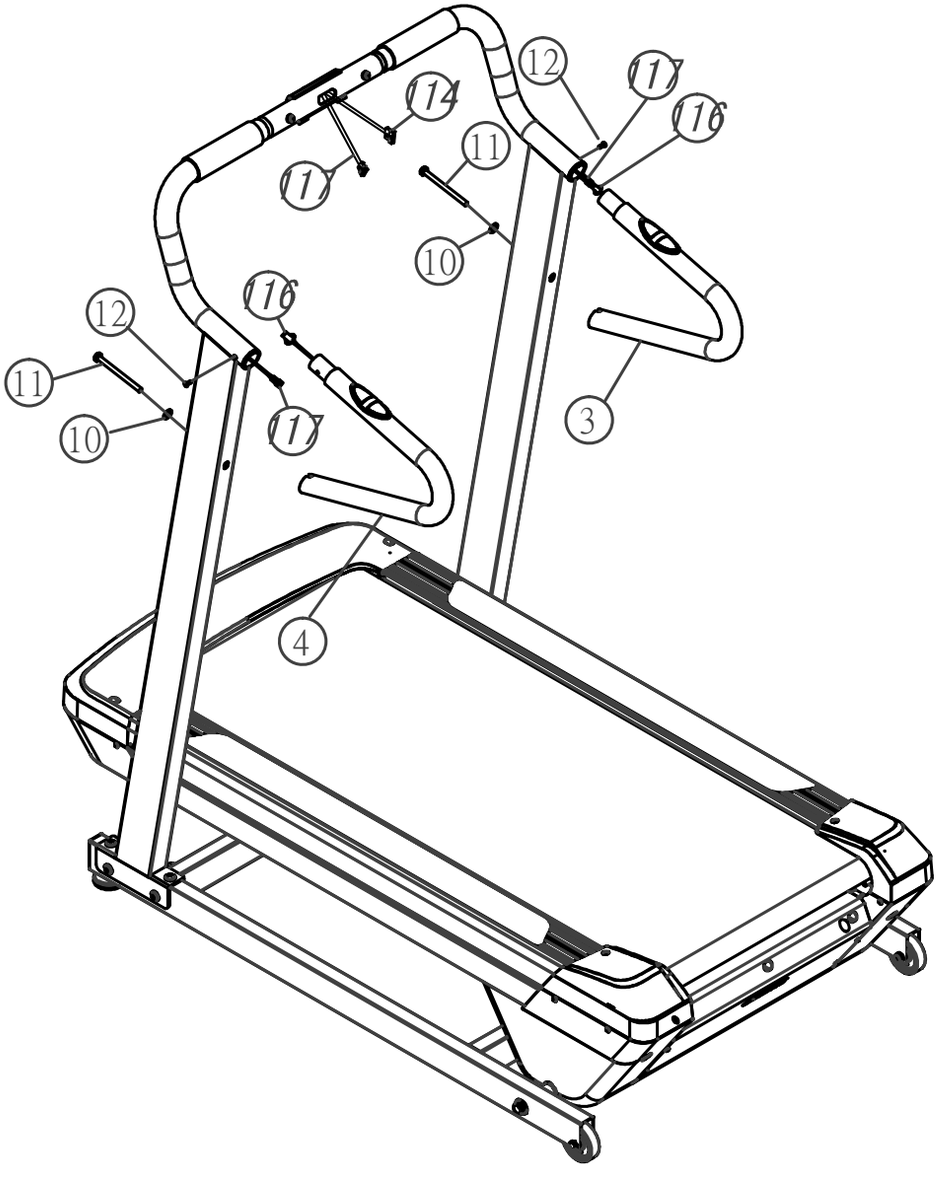

ASSEMBLY - STEP THREE

1. Use **Knob (#8)** and **Washer (#14)** to fix the **Bracket(No.E)** of **Console Set (#5)** on the bar of **Front Post (#2)**. Then connect wires from **Front Post (#2)** and **Console Set (#5)**. Last, use **Screws (#15)** to fix **Console Set (#5)** together. Then put on the **Safety Key (#7)**.

   Please make sure not to damage the wire and connector while assembling.

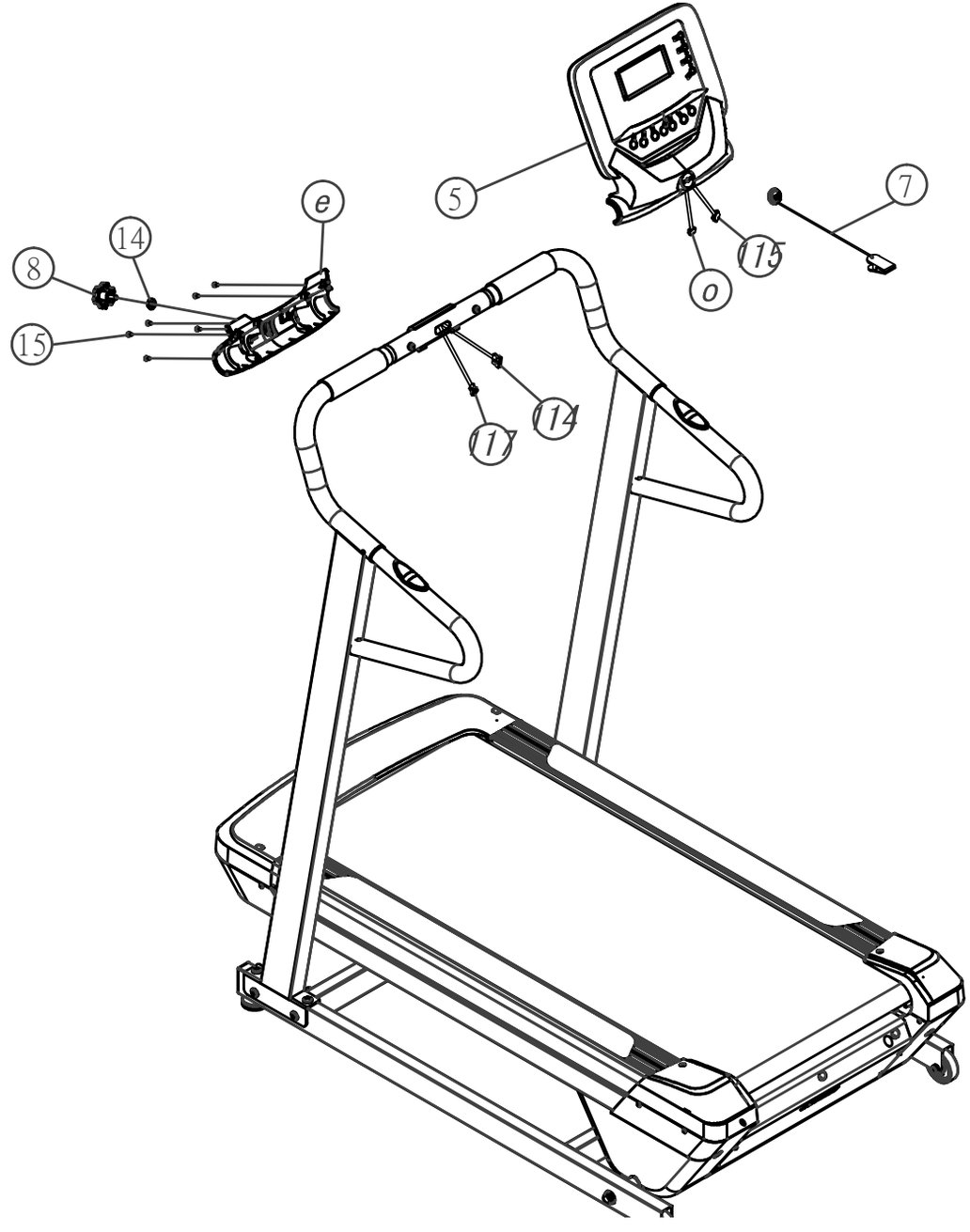

ASSEMBLY - STEP FOUR

1. Use Screws (#13) to attach Bottle Holder (#6) onto the left bar of the Front Post (#2).

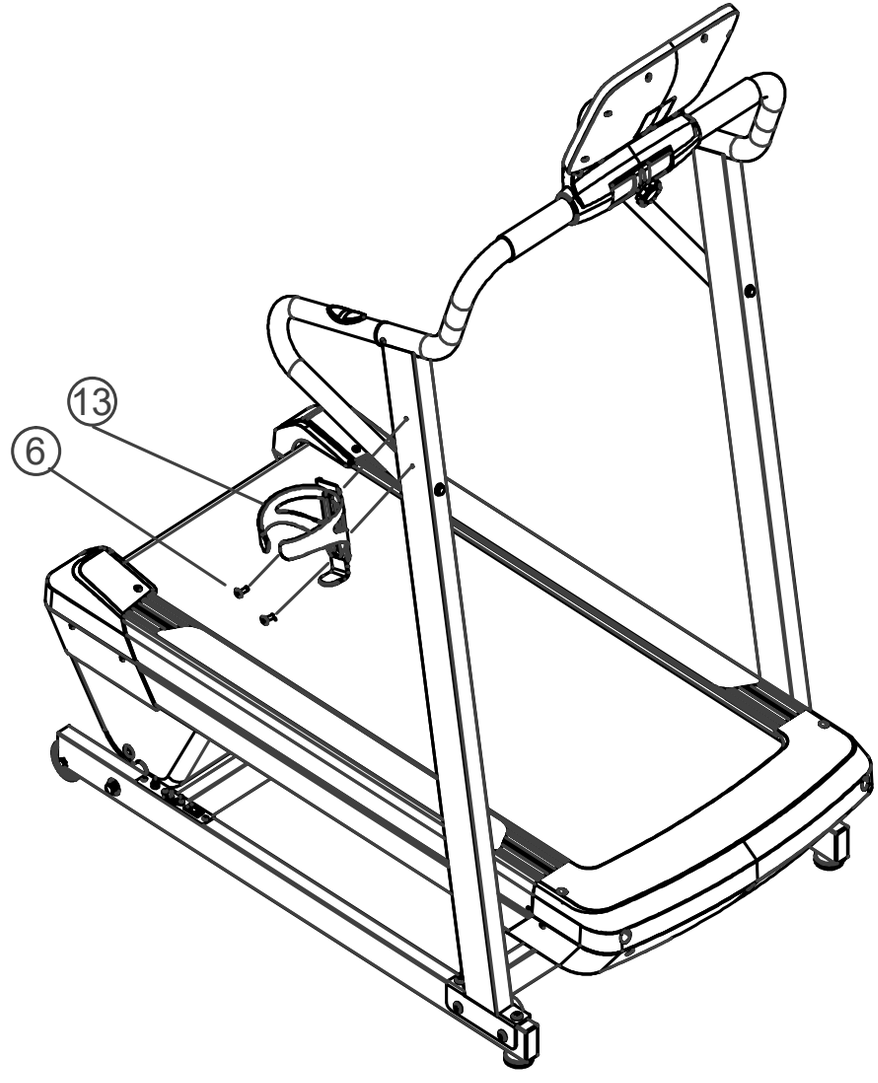

ASSEMBLY - STEP FIVE

1. Make sure the Safety Key is attached and the power cable is plugged in. Start your enjoyable workout.

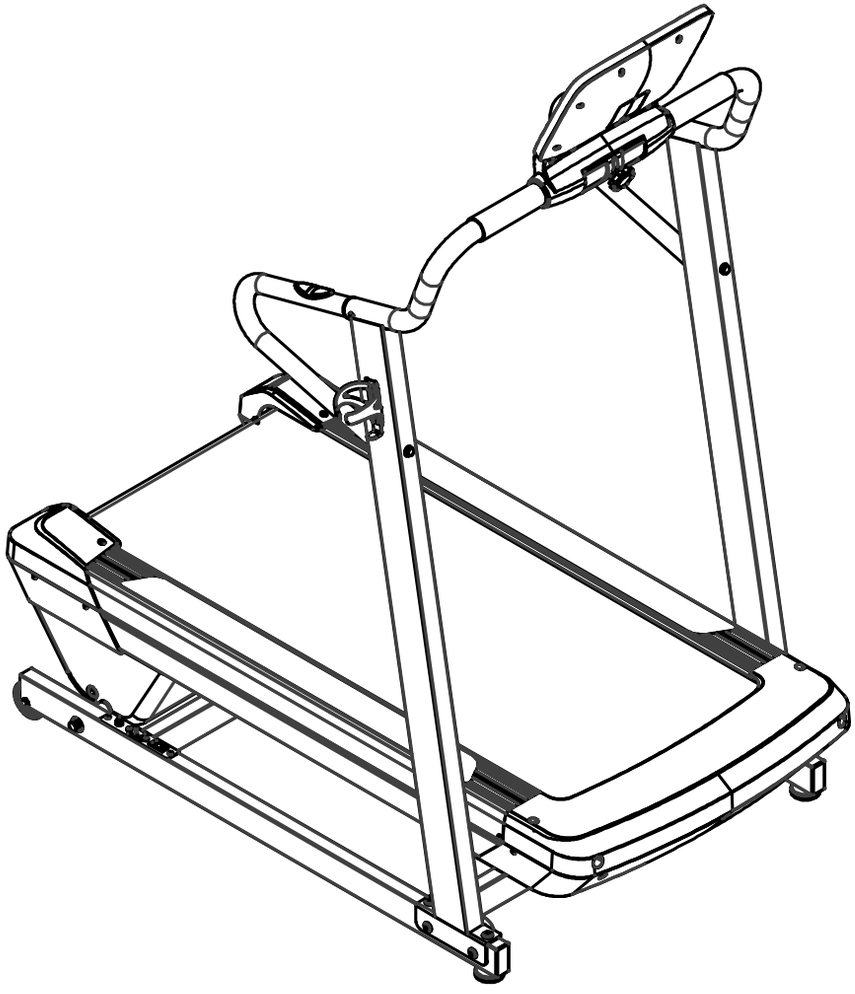

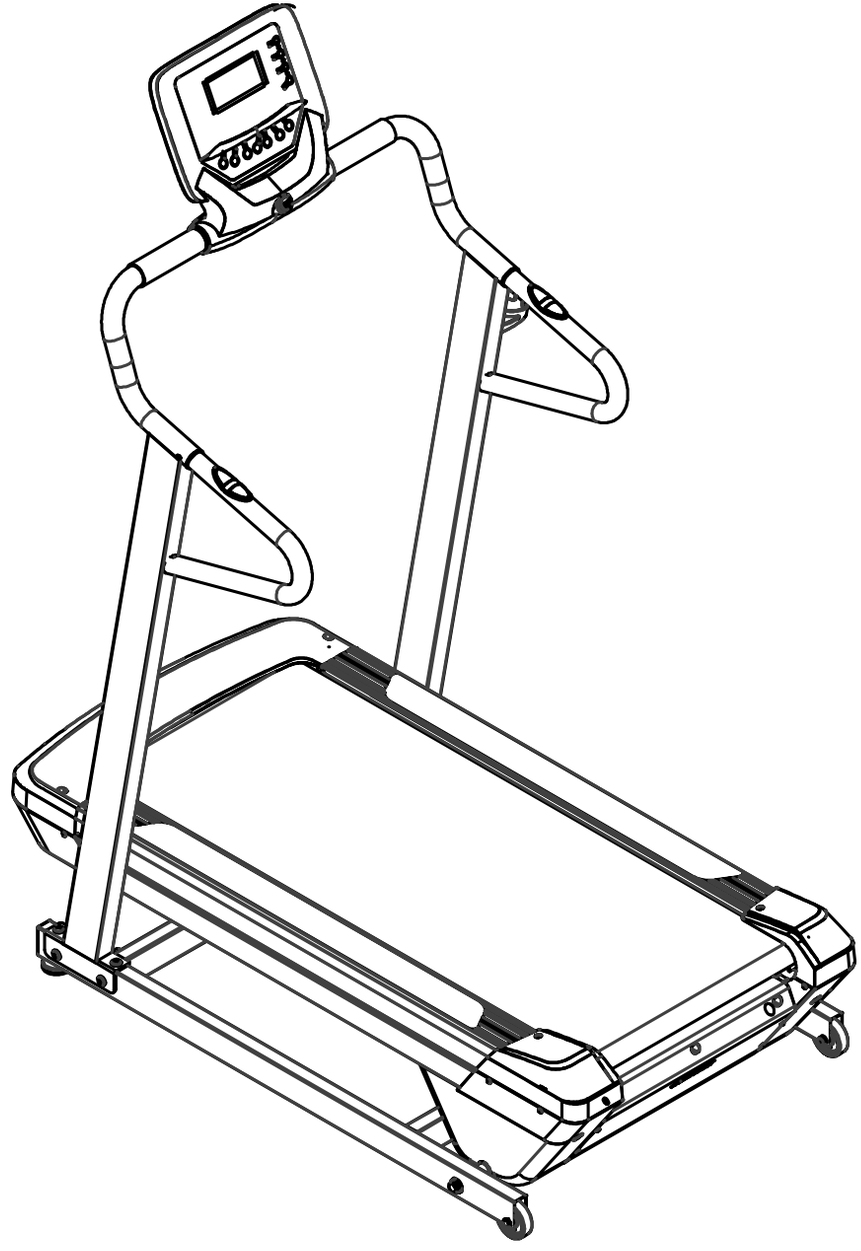

SETTING UP YOUR TREADMILL

Before Running

1. Read the manual first for familiarization of the computer and other important features
2. Before starting the treadmill, always stand on two side rails on both sides (not on the running belt) as shown on drawing.
3. Press in Safety Key underneath desktop, and have safety clip securely attach to an article of your clothing.
4. Start the treadmill and allow it to reach at speed of at least 0.6 mph, hold your hand on the handlebar then walk on the running belt to start your exercise program.

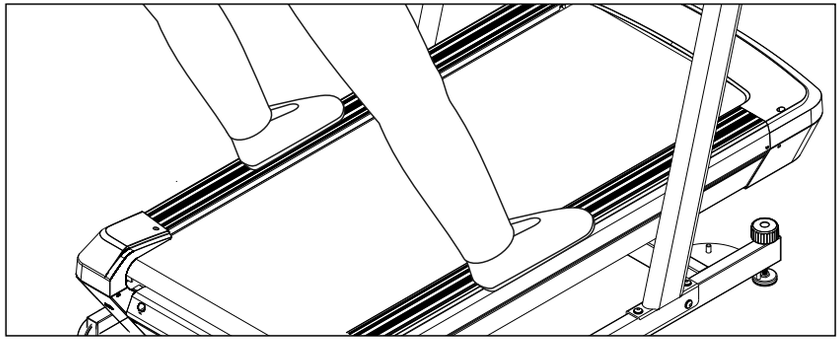

After Running

1. If you hear any abnormal noise from motor, please stop using and contact your distributor for necessary maintenance.
2. Please refer to below RUNNING DECK LUBRICATION to do necessary periodical maintenance for long-term and functional operation.

NOTE: FAILURE TO COMPLETE PERIODIC MAINTENANCE WILL VOID THE WARRANTY. SEE THE MAINTENANCE & CARE SECTION OF THE MANUAL.

SETTING UP YOUR TREADMILL

Moving and Leveling

Please note there are 2 adjusting tips at the front bottom of main frame.

1. Moving: To move the machine, turn both tips counterclockwise.
2. Leveling: To level the frame for operation, turn both tips clockwise .

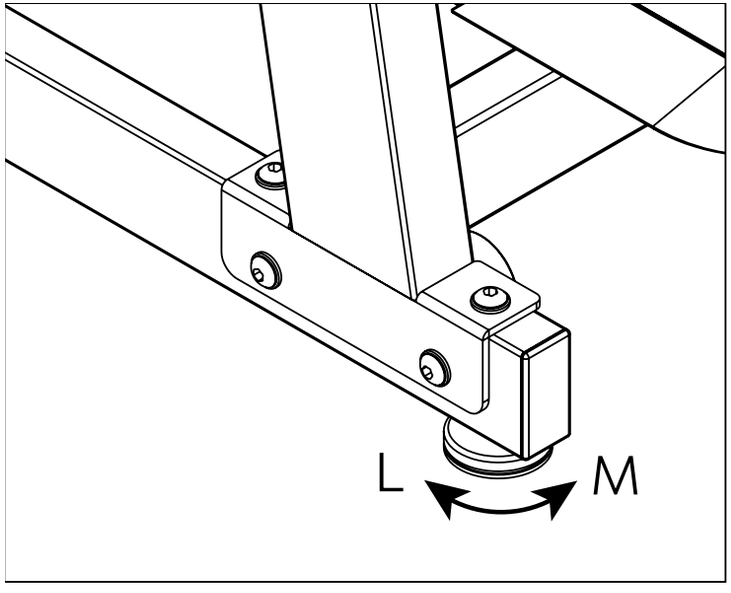

Plugging in and Powering On

Power the unit on by plugging it into an appropriate wall outlet, then turn on the power switch located at the front of the Hiker Treadmill below the motor hood, Ensure that the Safety Key is installed, as the Hiker Treadmill will not power on without it. When the power is turned on, all the lights on the display will light up for a short time and the console will show the software version. The Hiker Treadmill will then enter idle mode, which is the starting point for operation.

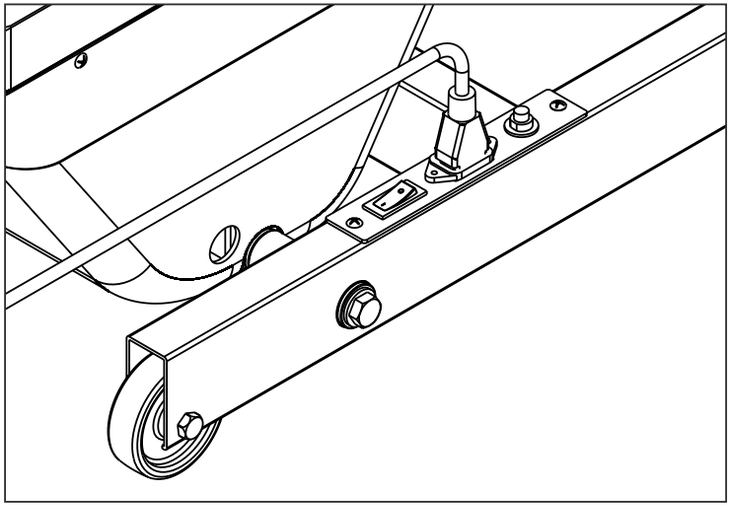

SAFETY KEY

A safety tether cord is provided with this unit.
It is a simple magnetic design that should be used at all times.
It is for your safety should you fall or move too far back on the tread-belt.
Pulling this safety tether cord will stop tread-belt movement.

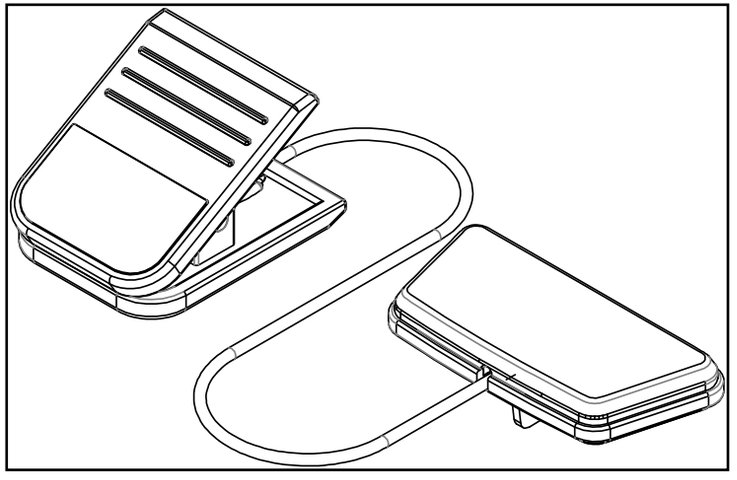

To Use:

1. Place the magnet into position on the round metal portion of the console control head. Your unit will not start and operate without this. Removing the magnet also secures the unit from unauthorized use.
2. Fasten the plastic clip onto your clothing securely to ensure good holding power. Note: The magnet has strong enough power to minimize accidental, unexpected stopping. The clip should be attached securely to make certain it does not come off. Be familiar with its function and limitations. The unit will stop, depending on speed, with a one to two step coast anytime the magnet is pulled off the console. Use the Stop / Pause switch in normal operation.

ABOUT YOUR MACHINE

Always use care and caution when operating your machine. Follow instruction in this manual to ensure safe operation and maintenance of your Hiker Treadmill

Be sure to follow XTERRA Fitness on your favorite social media platforms to view and share the latest fitness videos, images, and news.

facebook.com/XterraFitness

www.instagram.com/XterraFitness

youtube.com/user/XterraFitnessOnline

CONSOLE SCREEN - OVERVIEW

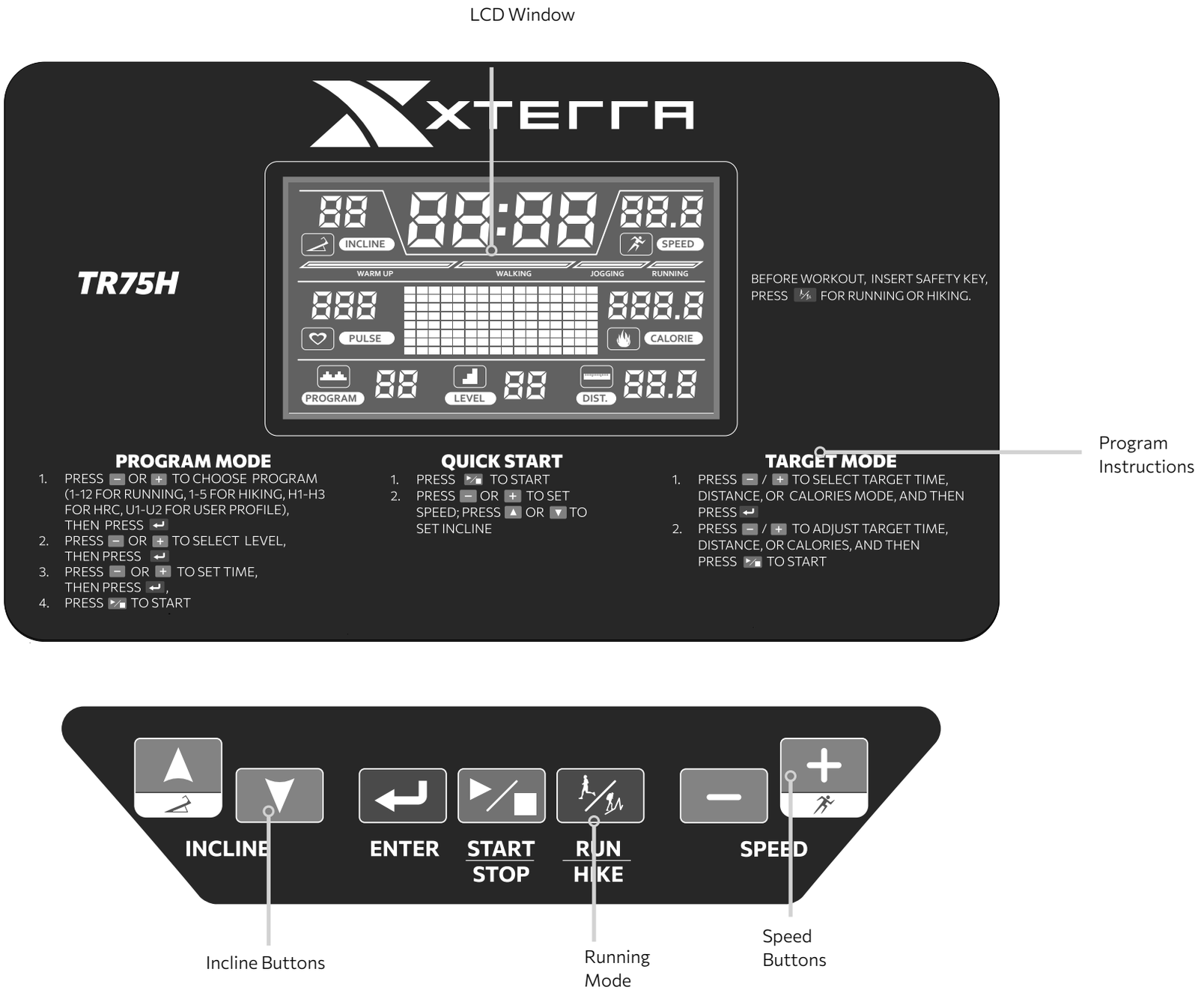

CONSOLE FEATURES

SPEED / INCLINE RANGE:

- Running Mode: 0.5 ~ 7.5 mph/0.5-7.5 mph, Level 0 ~ 15
- Climbing Mode: 0.5 ~3.7 mph/0.5-3.7 mph, Level 15 ~ 40

PROGRAM:

- Running Mode:
  - 12 preset with Difficult Level 1 - 3
  - 3 targets (Time, Distance, Calories)
  - HRR (E, M, T, A, I) (0.5~6.2 mph, Level 0~ 15)
  - Fat
- Climbing Mode:
  - 5 preset
  - 3 targets (Time, Distance, Calories)
  - HRR (E, M, T, A, I)(0.5~6.2 mph , Level 15~ 40)
  - Fat
- Defaulted data: Gender – Male, Age – 30, Height – 5'7", Weight – 150 lb, Time – 30 Minutes, Resting Heart Rate – 72 bpm, Target Distance – 0.6 mile, Target Calories – 10Kcal, Target Time – 30 Minutes

FUNCTION DISPLAY:

1. PULSE window: (A) Heartbeat 0 ~ 200bpm
   (B) Body Type 1 ~ 5
   (C) RESTING HEART RATE.
2. CALORIES window: (A) Calories 10 ~ 999 Kcal
   (B) Height 1'8" ~ 8'2"
3. STEP window: (A) Step count (B) BMR
4. DISTANCE window: (A) Distance 0 ~ 99.9 mile (B) FAT%
5. PROGRAM window: (A) Running Mode 1 ~ 12,
   Climbing Mode 1 ~ 5.
   (B) BMI
   (C) U0 ~ U3
6. GENDER window: Male / Female

CONSOLE FEATURES















BUTTON FUNCTION:

STOP/START

- Press to start the treadmill from standby mode.
- Press to pause while running.
- Press and hold to return to standby mode and reset all data.

ENTER

- Press to confirm program settings and workout tensions.

RUN/HIKE

- Press this button to select either “Running” or “Hiking” mode while in standby mode.
- Press this button to switch between “Running” and “Hiking” modes while running.

INCLINE +/-

- Press to increase/decrease incline by 1 level while running.
- Before starting: Press to select PROGRAM.
- In setting mode: Press to select LEVEL.
- In data setting mode: Press to adjust data values up or down.

SPEED +/-

- Press to increase/decrease speed by 0.1 mph while running.
- Before starting: Press to select PROGRAM.
- In setting mode: Press to select LEVEL.
- In data setting mode: Press to increase or decrease values.

SCREEN DISPLAY - STATUS

Display Icons	Status	Description
	Power on full display	All function and numeric icons will light up after switch on, and will automatically enter Standby Mode.
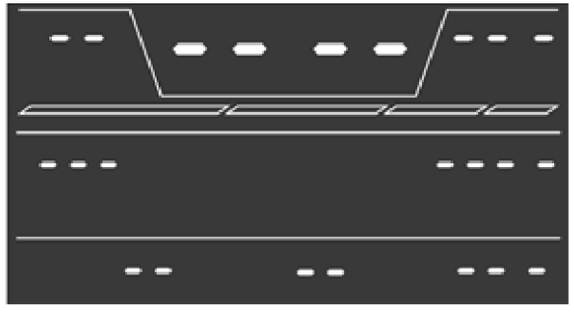	Safety key not inserted	Only the border lines are displayed, and all digits show “--”. Buttons are not functioning under this mode.
	Standby mode while safety key inserted	1. All icons show, numbers display “0”, and the dot matrix shows a running track. 2. The track animation moves counterclockwise; only the first section shows after the first lap. 3. Default mode is running. Press “Running / Hiking” to switch, and the display shows “RUN” or “HIKE”.

SCREEN DISPLAY - FUNCTION

Display Icons	Function	Description
	INCLINE LEVEL	Running mode: 0 ~ 15 level Hiking mode: 15 ~ 40 level
	DISTANCE	Display Range: 00.0 ~ 99.9 KM (mile) with looping display.
	PROGRAM	0 for Quick Start or Target Mode (time/distance/calories) 1~12 for Preset Program (P01~P12): Running Mode 1~12, Hiking Mode 1~5 H1~H3 for Heart Rate Control Mode (H1~H3) U1~U2 for User Mode (U1~U2)
	TRAINING LEVEL	Training tension in 3 levels, display in L1~L3, with looping display.
	CALORIES	Display Range: 000.0 ~ 999.9 KCAL with looping display.
	PULSE	Display Range: 40 ~ 200 When no heart rate is detected, the display will show “0” as default.
	SPEED	Running mode: 0.8 ~ 12 KPH (0.5 ~ 7.5 mile) Hiking mode: 0.8 ~ 6 KPH (0.5 ~ 3.7 mile)

SCREEN DISPLAY - FUNCTION



SPEED BAR

Warm up: 0.5 ~ 1.9 miles
Walking 1.9 ~ 3.7 miles
Jogging: 3.7 ~ 6.2 miles
Running: 6.2 ~7.5 miles

Normal Display (No Movement – Only White Outline Shown)



LUBE ALERT

When the total usage reaches 112 miles, the word “LUBE” will appear on the LCD screen after powering on. Pressing any key will temporarily remove the message, but it will appear again the next time the system is turned on.

To reset the 112 mile maintenance reminder and clear the “LUBE” message, press STOP + SPEED (-) at the same time.

Note: The reset only works after the 112 mile threshold has been reached.

OPERATION & QUICK START

Getting Started

1. Switch on the power, and console screen will display Standby Mode when safety key is properly inserted.
2. If not, only border lines are shown, numbers display “--”, and dot matrix scrolls the message: “INSERT SAFETY KEY”.
3. Incline will automatically return to 0 if not already.
4. Press RUN / HIKE to choose RUNNING or HIKING mode.
5. Press START/STOP for Quick Start mode.

Note:
In Running mode: dot matrix only shows speed profile.
In Hiking mode: dot matrix only shows incline profile.

Quick start mode (Program Code: 0)

1. Press RUN / HIKE to choose RUNNING or HIKING MODE.
2. Press START/STOP to begin Quick Start.
3. A countdown “5, 4, 3, 2, 1” with beeps will play, then the motor starts.
4. Starts at speed 0.5 MPH; 0 incline level for running, and 15 incline level for hiking.
5. Dot matrix shows track animation, and TIME, DISTANCE, and CALORIES count up.
6. Use + / – to adjust speed, and ▲ / ▼ to adjust incline.
7. Press RUN/HIKE to switch between RUNNING and HIKING mode.

Default Setting

Age: 30
Time: 32 min
Distance: 1.0 km (Mile)
Calories: 10 kCal

PROGRAMS - TARGET MODE

Target Mode (Program Code: 0)

TIME

1. In standby mode, press + / − to select target time.
2. Dot matrix scrolls: “TARGET TIME”.
3. Press ENTER and dot matrix scrolls: “SET TIME OR START”.
4. Use + / − to adjust time (default time 32:00, range: 10:00–99:00).
5. Press ENTER to confirm. Dot matrix shows: “PRESS START”. Press START/STOP to begin.
6. Press RUN/HIKE to switch between RUNNING and HIKING mode.
7. Dot matrix shows track animation and TIME counts down. Distance ran and calories burnt will be shown in respective windows.

DISTANCE

1. In standby mode, press + / − to select target distance.
2. Dot matrix scrolls: “TARGET DISTANCE”.
3. Dress ENTER to set distance. Dot matrix scrolls: “SET DISTANCE OR START”.
4. Use + / − to adjust distance (default distance 1 mile, range: 1.0–20.0 mile).
5. Press ENTER to confirm. Dot matrix scrolls: “PRESS START”. Press START/STOP to begin.
6. Press RUN/HIKE to switch between RUNNING and HIKING mode.
7. Dot matrix shows track animation and DISTANCE counts down. Time spent and calories burnt will be shown in respective windows.

CALORIES

1. In standby mode, press + / − to select target calories.
2. Dot matrix scrolls: “TARGET CALORIES”.
3. Press ENTER to set calories. Dot matrix scrolls “SET CALORIES OR START”.
4. Use + / − to adjust calories (default calories 10.0, range: 10.0–990.0).
5. Press ENTER to confirm. Dot matrix scrolls “PRESS START”. Press START/STOP to begin.
6. Press RUN/HIKE to switch between RUNNING and HIKING mode.
7. Dot matrix shows track animation and CALORIES count down. Time spent and distance ran will be shown in respective windows.

PROGRAMS - HEART RATE CONTROL

A. Target Heart Rate Calculation

1. Level 1: (220 – Age) × 60% (default age: 30)
2. Level 2: (220 – Age) × 75%
3. Level 3: (220 – Age) × 85%

B. Setup Steps

1. In standby mode, press RUN / HIKE to choose RUNNING or HIKING MODE.
2. Press + / – to select HRC mode; The selected “H1~H3” will flash in the PROGRAM window.
3. Press ENTER to set age. Dot matrix scrolls “AGE”.
4. Use + / – to select age (default: 30, range: 13–99).
5. Press ENTER pulse window will show highest heart rate, and dot matrix scrolls “CHOOSE LEVEL OR START”.
6. Use + / – to select level (default L1, range L1–L3).
7. Press ENTER , dot matrix scrolls “SET TIME OR START”.
8. Use + / – to set time (default time 32:00, range: 1:00–99:00).
9. Press ENTER to confirm setup. Dot matrix shows “PRESS START”.
10. Press START/STOP to begin. **Default setting will be used if value is not input.

C. HRC 1 – Speed Control Only (Program Code: H01)

Stage	Heart Rate Check	System Action
Within 30 second after start, system checks heart rate every 10 sec, for 3 consecutive time.	Heart rate detected.	System enters the corresponding heart rate control setting based on detected reading.
	Heart rate not detected.	PULSE displays will blink 3 times for 30 seconds. If still no reading, system will pause.
30 second after start	Heart rate detected within ±10 bpm of target HR	System maintains heart rate check in every 10 sec. Speed adjusts by ±0.2 KPH in every 10 sec check.
	Heart rate detected outside ±10 bpm of target HR	System executes heart rate check every 5 sec. Speed adjusts by ±0.2 KPH in every 5 sec check.
	Heart rate detected exceeding 20 bpm of Highest HR in two consecutive checks.	System pauses immediately. PULSE displays “HI”.

D. HRC 2 – Incline Control Only (Program Code: H02)

Stage	Heart Rate Check	System Action
Within 30 second after start, system checks heart rate every 10 sec, for 3 consecutive time.	Heart rate detected.	System enters the corresponding heart rate control setting based on detected reading.
	Heart rate not detected.	PULSE displays will blink 3 times for 30 seconds. If still no reading, system will pause.
30 second after start	Heart rate detected within ±10 bpm of target HR	System maintains heart rate check in every 10 sec. Incline adjusts by 1 level in every 10 sec check.
	Heart rate detected outside ±10 bpm of target HR	System executes heart rate check every 5 sec. Incline adjusts by 1 level in every 5 sec check.
	Heart rate detected exceeding 20 bpm of Highest HR in two consecutive checks.	System pauses immediately. PULSE displays “HI”.

E. HRC 3 – Speed and Incline Control (Program Code: H03)

Stage	Heart Rate Check	System Action
Within 30 second after start, system checks heart rate every 10 sec, for 3 consecutive time.	Heart rate detected.	System enters the corresponding heart rate control setting based on detected reading.
	Heart rate not detected.	PULSE displays will blink 3 times for 30 seconds. If still no reading, system will pause.
30 second after start	Heart rate detected within ±10 bpm of target HR	System maintains heart rate check in every 10 sec. Speed adjusts by ±0.2 KPH, followed by incline adjust by 1 level after speed hit max/min, in every 10 sec check.
	Heart rate detected outside ±10 bpm of target HR	System executes heart rate check every 5 sec. Speed adjusts by ±0.2 KPH, followed by incline adjust by 1 level after speed hit max/min, in every 5 sec check.
	Heart rate detected exceeding 20 bpm of Highest HR in two consecutive checks.	System pauses immediately. PULSE displays “HI”.

PROGRAMS - USER MODE (U1 ~ U2)

1. In standby mode, press RUN / HIKE to choose RUNNING or HIKING MODE.
2. Press + / – or to select USER mode. The selected “U1~U2” will flash in the PROGRAM window.
3. Press ENTER to set the time. Dot matrix scrolls “SET TIME OR START”.
4. Press + / – to adjust time (default time 32:00, range: 10:00–99:00).
5. Press ENTER and dot matrix scrolls “PRESS START”.
6. Press START to begin workout with the selected USER data and time.

To use USER INTERVAL Program Setting, repeat above Step 1~2.

3. Press and hold ENTER for 3 seconds to enter INTERVAL setting. SPEED and INCLINE windows will flash.
4. Press + / – to set speed for the first INTERVAL (shown in SPEED window). Dot matrix shows speed profile.
5. Press ▲/ ▼ to set incline for the first INTERVAL (shown in INCLINE window). Dot matrix does not show speed profile.
6. Press ENTER to move to the next INTERVAL, and repeat step 4~5 to set speed/incline.
7. After setting up the last INTERVAL, press ENTER and a long beep confirms the data is saved. Then proceed to time setting.
8. Dot matrix scrolls “SET TIME OR START”, press + / – to set time.
9. After setting time, press ENTER and dot matrix shows “PRESS START”.
10. Press START/STOP to begin workout using saved USER data and time.

PROGRAMS - PRESET RUNNING PROGRAM (01~12)

1. In standby mode, press RUN / HIKE to choose running or hiking mode.
2. Press + / − to select Preset Program. PROGRAM window shows “01~12” for Running Mode, and 01~05” for Hiking Mode
3. Press ENTER to confirm selected program.

Running Mode

4. Dot matrix scrolls “SELECT LEVEL”
5. Press + / − to choose level (L1~L3), and then press ENTER to confirm.
6. Dot matrix scrolls “SELECT TIME”
7. Press + / − to set time, and then press ENTER to confirm.
8. Press START/STOP to begin training program.

Hiking Mode

4. Dot matrix scrolls “SELECT TIME”
5. Press + / − to set time, and then press ENTER to confirm.
6. Press START/STOP to begin training program.

Running Mode P1~P4; Level 1

LEVEL 2: Based on LEVEL 1, speed increases by 1.0 miles per segment, incline remains the same.

LEVEL 3: Based on LEVEL 2, speed increases by 1.0 miles per segment, incline remains the same.

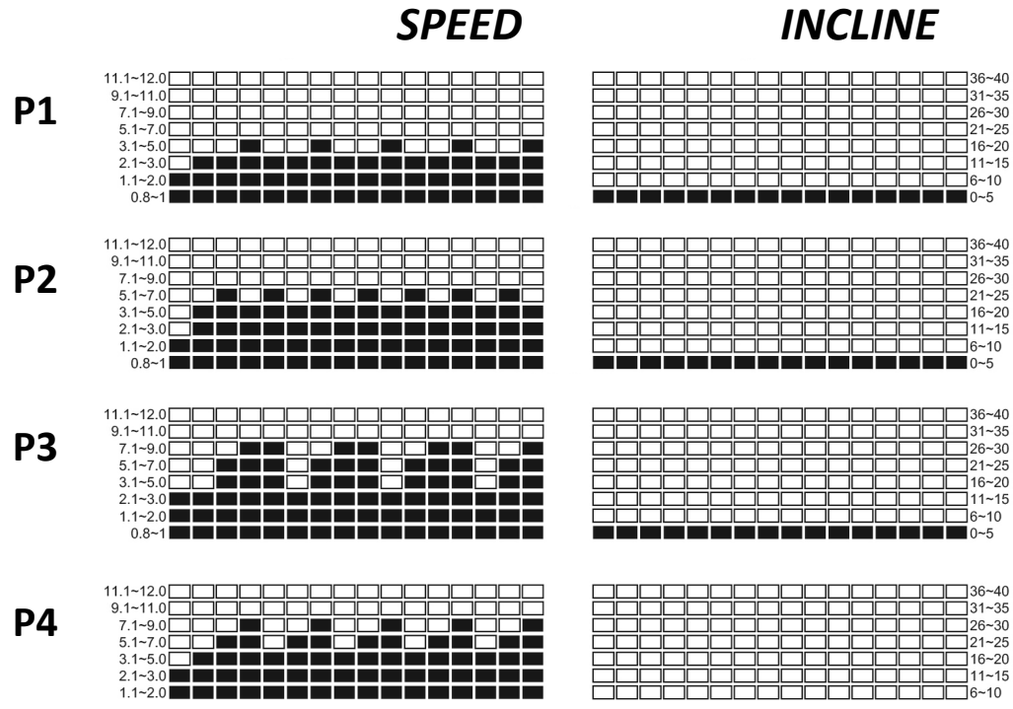

Interval	P1		P2		P3		P4	
	Speed	Incline	Speed	Incline	Speed	Incline	Speed	Incline
1	2.0	0	2.0	0	3.0	0	3.0	0
2	3.0	0	4.0	0	3.0	0	5.0	0
3	3.0	0	6.0	0	6.0	0	7.0	0
4	5.0	0	4.0	0	8.0	0	8.0	0
5	3.0	0	6.0	0	8.0	0	5.0	0
6	3.0	0	4.0	0	3.0	0	7.0	0
7	5.0	0	6.0	0	6.0	0	8.0	0
8	3.0	0	4.0	0	8.0	0	5.0	0
9	3.0	0	6.0	0	8.0	0	7.0	0
10	5.0	0	4.0	0	3.0	0	8.0	0
11	3.0	0	6.0	0	6.0	0	5.0	0
12	3.0	0	4.0	0	8.0	0	7.0	0
13	5.0	0	6.0	0	8.0	0	8.0	0
14	3.0	0	4.0	0	3.0	0	5.0	0
15	3.0	0	6.0	0	6.0	0	7.0	0
16	5.0	0	4.0	0	8.0	0	8.0	0

PROGRAMS - PRESET RUNNING PROGRAM (01~12)

Preset Running Program (Program Code: 05~08)
Running Mode P5~P8; Level 2

LEVEL 2: Based on LEVEL 1, speed increases by 1.0 miles per segment, incline remains the same.

LEVEL 3: Based on LEVEL 2, speed increases by 1.0 miles per segment, incline remains the same.

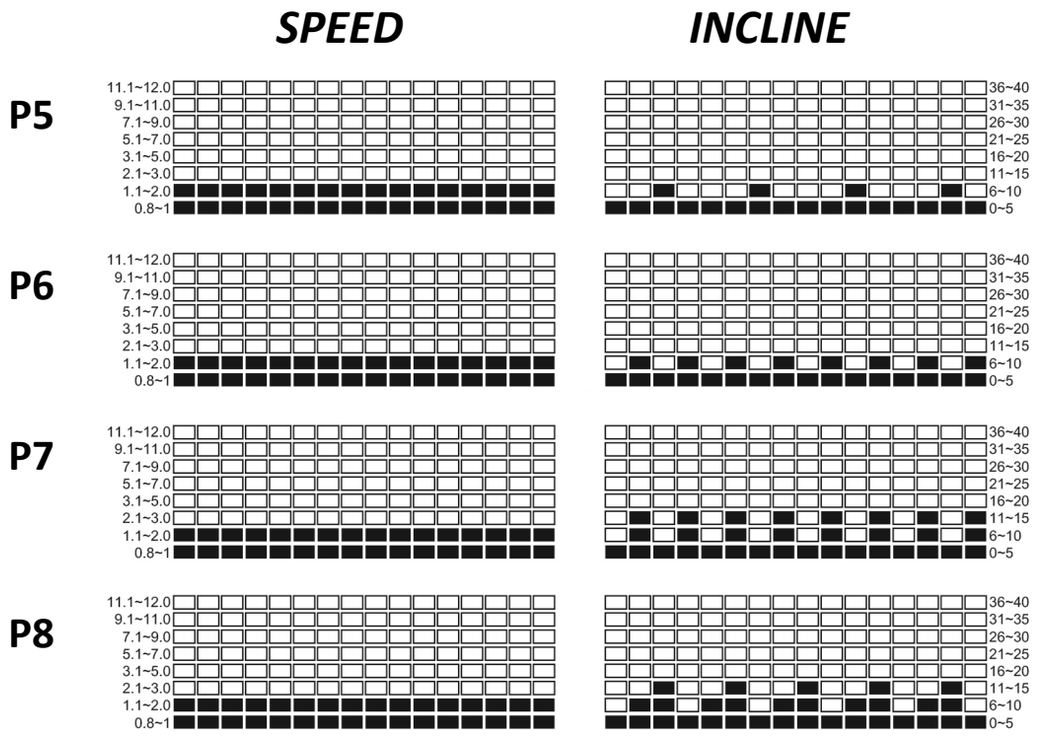

Interval	P5		P6		P7		P8	
	Speed	Incline	Speed	Incline	Speed	Incline	Speed	Incline
1	2.0	2	2.0	3	2.0	4	2.0	3
2	2.0	4	2.0	6	2.0	11	2.0	6
3	2.0	6	2.0	3	2.0	4	2.0	12
4	2.0	4	2.0	6	2.0	11	2.0	3
5	2.0	2	2.0	3	2.0	4	2.0	6
6	2.0	4	2.0	6	2.0	11	2.0	12
7	2.0	6	2.0	3	2.0	4	2.0	3
8	2.0	4	2.0	6	2.0	11	2.0	6
9	2.0	2	2.0	3	2.0	4	2.0	12
10	2.0	4	2.0	6	2.0	11	2.0	3
11	2.0	6	2.0	3	2.0	4	2.0	6
12	2.0	4	2.0	6	2.0	11	2.0	12
13	2.0	2	2.0	3	2.0	4	2.0	3
14	2.0	4	2.0	6	2.0	11	2.0	6
15	2.0	6	2.0	3	2.0	4	2.0	12
16	2.0	4	2.0	6	2.0	11	2.0	3

PROGRAMS - PRESET RUNNING PROGRAM (01~12)

SPEED ***INCLINE***

P9

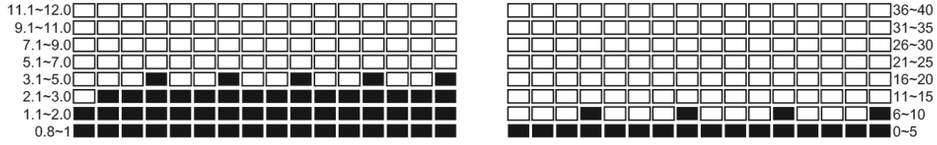

P10

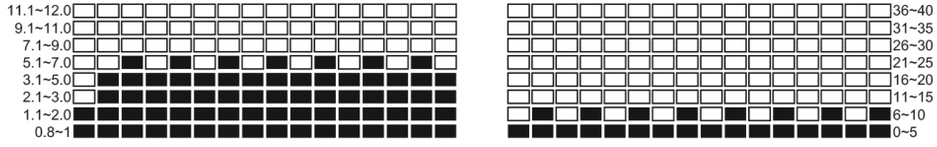

P11

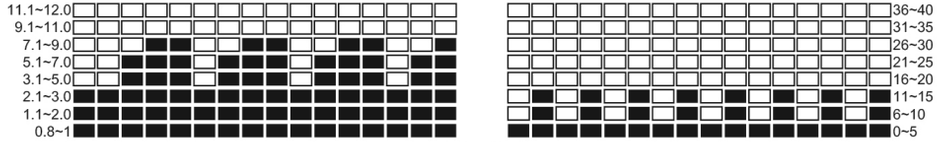

P12

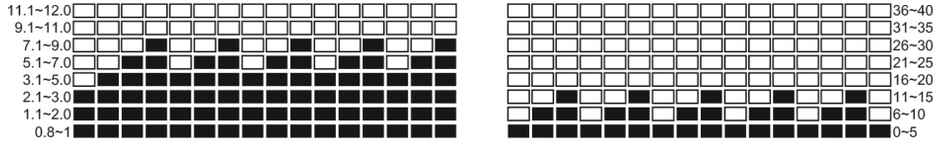

Interval	P9		P10		P11		P12	
	Speed	Incline	Speed	Incline	Speed	Incline	Speed	Incline
1	2.0	2	2.0	3	3.0	4	3.0	3
2	3.0	4	4.0	6	3.0	11	5.0	6
3	3.0	6	6.0	3	6.0	4	7.0	12
4	5.0	4	4.0	6	8.0	11	8.0	3
5	3.0	2	6.0	3	8.0	4	5.0	6
6	3.0	4	4.0	6	3.0	11	7.0	12
7	5.0	6	6.0	3	6.0	4	8.0	3
8	3.0	4	4.0	6	8.0	11	5.0	6
9	3.0	2	6.0	3	8.0	4	7.0	12
10	5.0	4	4.0	6	3.0	11	8.0	3
11	3.0	6	6.0	3	6.0	4	5.0	6
12	3.0	4	4.0	6	8.0	11	7.0	12
13	5.0	2	6.0	3	8.0	4	8.0	3
14	3.0	4	4.0	6	3.0	11	5.0	6
15	3.0	6	6.0	3	6.0	4	7.0	12
16	5.0	4	4.0	6	8.0	11	8.0	3

Preset Running Program (Program Code: 09~12)
Running Mode P9~P12; Level 3

LEVEL 2: Based on LEVEL 1, speed increases by 1.0 miles per segment, incline remains the same.

LEVEL 3: Based on LEVEL 2, speed increases by 1.0 miles per segment, incline remains the same.

PROGRAMS - PRESET HIKING PROGRAM (1-5)

Preset Hiking Mode (Program Code: 01~05)
Hiking Mode P1~P5

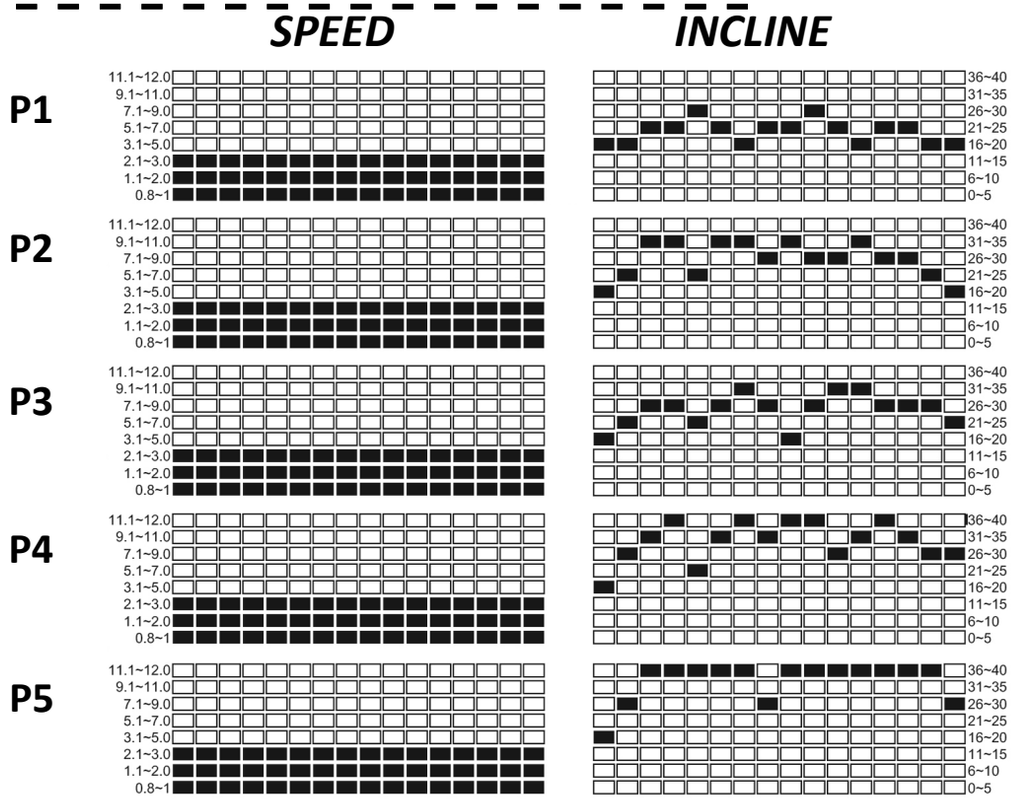

Interval	P1		P2		P3		P4		P5	
	Speed	Incline	Speed	Incline	Speed	Incline	Speed	Incline	Speed	Incline
1	3.0	16	3.0	16	3.0	16	3.0	16	3.0	16
2	3.0	18	3.0	25	3.0	25	3.0	30	3.0	30
3	3.0	21	3.0	33	3.0	28	3.0	35	3.0	40
4	3.0	25	3.0	35	3.0	30	3.0	40	3.0	40
5	3.0	30	3.0	25	3.0	25	3.0	25	3.0	40
6	3.0	25	3.0	33	3.0	30	3.0	35	3.0	40
7	3.0	20	3.0	35	3.0	35	3.0	40	3.0	40
8	3.0	23	3.0	30	3.0	30	3.0	35	3.0	30
9	3.0	25	3.0	35	3.0	20	3.0	38	3.0	40
10	3.0	30	3.0	28	3.0	30	3.0	40	3.0	40
11	3.0	25	3.0	30	3.0	33	3.0	30	3.0	40
12	3.0	16	3.0	35	3.0	35	3.0	35	3.0	40
13	3.0	23	3.0	28	3.0	26	3.0	40	3.0	40
14	3.0	25	3.0	30	3.0	28	3.0	35	3.0	40
15	3.0	20	3.0	25	3.0	30	3.0	30	3.0	40
16	3.0	16	3.0	20	3.0	25	3.0	28	3.0	30

HEART RATE CHEST STRAP* (NOT INCLUDED)

1. Attach the transmitter to the elastic strap using the interlocking key.
2. Adjust the strap as tightly as possible as long as the strap is not too tight to remain comfortable.
3. Position the transmitter with the logo centered in the middle of your torso facing away from your chest (some people must position the transmitter slightly left of center). Attach the final end of the elastic strap by inserting the round end and, using the locking parts, secure the transmitter and strap around your chest.
4. Position the transmitter directly below the pectoral muscles.
5. Sweat is the best conductor to measure very minute heart beat electrical signals. However, plain water can also be used to pre-wet the electrodes (2 ribbed oval areas on the reverse side of the belt and both sides of the transmitter). It's also recommended that you wear the transmitter strap a few minutes before your work out. Some users, because of body chemistry, have a more difficult time in achieving a strong, steady signal at the beginning. After "warming up", this problem lessens.
6. Your workout must be within range - distance between transmitter/receiver – to achieve a strong steady signal. The length of range may vary somewhat but generally stay close enough to the console to maintain good, strong, reliable readings. Wearing the transmitter directly on bare skin assures you of proper operation. If you wish, you may wear the transmitter over a shirt. To do so, wet the areas of the shirt that the electrodes will rest upon.

Note: The transmitter is automatically activated when it detects activity from the user's heart. Additionally, it automatically deactivates when it does not receive any activity. Although the transmitter is water resistant, moisture can have the effect of creating false signals, so you should take precautions to completely dry the transmitter after use to prolong battery life (estimated transmitter battery life is 2500 hours). The replacement battery is Panasonic CR2032.

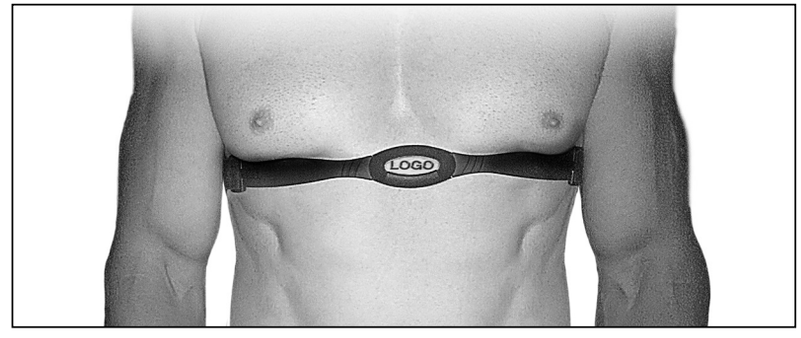

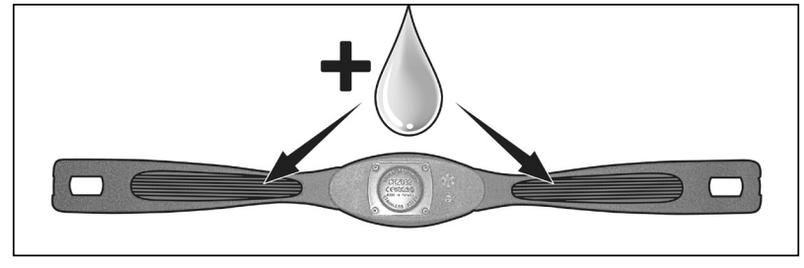

HEART RATE EXERTION

The old motto, “no pain, no gain”, is a myth that has been overpowered by the benefits of exercising comfortably. A great deal of this success has been promoted by the use of heart rate monitors. With the proper use of a heart rate monitor, many people find that their usual choice of exercise intensity was either too high or too low and exercise is much more enjoyable by maintaining their heart rate in the desired benefit range.

To determine the benefit range in which you wish to train, you must first determine your Maximum Heart Rate. This can be accomplished by using the following formula: 220 minus your age. This will give you the Maximum Heart Rate (MHR)for someone of your age. To determine the effective heart rate range for specific goals you simply calculate a percentage of your MHR. Your Heart rate training zone is 50% to 90% of your maximum heart rate. 60% of your MHR is the recommended for burning fat while 80% is recommended for strengthening the cardio vascular system. This 60% to 80% is the zone to stay in for maximum benefit.

For someone who is 40 years old their
target heart rate zone is calculated:
220 – 40 = 180 (maximum heart rate)
180 x .6 = 108 beats per minute (60% of maximum)
180 X .8 = 144 beats per minute (80% of maximum)
So for a 40 year old the training zone would
be 108 to 144 beats per minute.

If you enter your age during programming the console will perform this calculation automatically. Entering your age is used for the Heart Rate programs. After calculating your MHR you can decide upon which goal you would like to pursue.

The two most popular reasons for, or goals, of exercise are cardiovascular fitness (training for the heart and lungs) and weight control. The black columns on the chart represent the MHR for a person whose age is listed at the bottom of each column. The training heart rate, for either cardiovascular fitness or weight loss, is represented by two different lines that cut diagonally through the chart. A definition of the lines’ goal is in the bottom left-hand corner of the chart. If your goal is cardiovascular fitness or if it is weight loss, it can be achieved by training at 80% or 60%, respectively, of your MHR on a schedule approved by your physician. Consult your physician before participating in any exercise program.

With this Spirit Fitness unit you may use the heart rate monitor feature without using the Heart Rate program. However, when using the heart rate monitor feature in conjunction with the Heart Rate programs, the machine will automatically adjust speed or incline to maintain the desired heart rate.

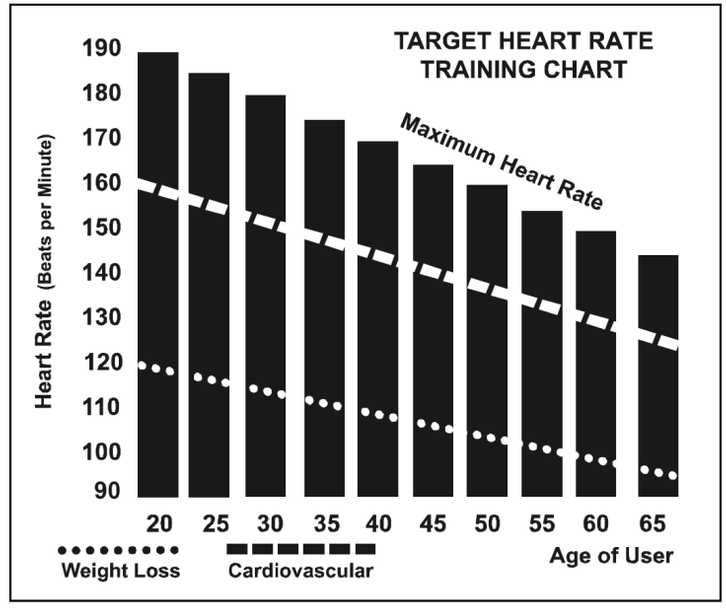

HEART RATE - PERCEIVED EXERTION

Heart rate is important but listening to your body also has a lot of advantages. There are more variables involved in how hard you should workout than just heart rate. Your stress level, physical health, emotional health, temperature, humidity, the time of day, the last time you ate and what you ate all contribute to the intensity at which you should workout. If you listen to your body it will tell you all of these things.

The rate of perceived exertion (RPE), also known as the Borg scale, was developed by Swedish physiologist G.A.V. Borg. This scale rates exercise intensity from 6 to 20 depending upon how you feel or the perception of your effort.
The scale is as follows:

Rating Perception of Effort

6	Minimal
7	Very, Very Light
8	Very, Very Light +
9	Very Light
10	Very Light +
11	Fairly Light
12	Comfortable
13	Somewhat Hard
14	Somewhat Hard +
15	Hard
16	Hard +
17	Very Hard
18	Very Hard +
19	Very, Very Hard
20	Maximal

You can get an approximate heart rate level for each rating by simply adding a zero to each rating. For example a rating of 12 will result in an approximate heart rate of 120 beats per minute. Your RPE will vary depending on the factors discussed earlier. If your body is strong and rested, you will feel strong and your pace will feel comfortable. When your body is in this condition, you are able to train harder and the RPE will support this. If you are feeling tired and sluggish, it is because your body needs a break. In this condition, your pace will feel difficult. Again, this will show up in your RPE and you will train at the proper level for that day.

MAINTENANCE & CARE

Post-Workout Machine Care

1. Use a slightly damp cloth to clean areas where sweat or oil made contact with the machine.
2. Use a microfiber cloth to clean the display and remove unwanted oils and other things that may damage the screen.
3. Avoid leaving paper or other small debris in the cupholders.

General Cleaning

Dirt, dust, and hair can block air inlets and accumulate on the running belt. Please vacuum underneath your unit on a monthly basis to prevent excess build-up of dirt that can get sucked up and get into the inner workings under the motor cover. Every other month, you should remove the motor cover and carefully vacuum out dirt and hair that may accumulate.

UNPLUG THE POWER CORD BEFORE THIS TASK.

Sanitizing Your XTERRA Fitness Equipment

- Unupholstered high-contact surfaces (hard plastics) can be sanitized using a 75% isopropyl alcohol solution and a clean, dry cloth. Spray surfaces to be sanitized, and use the dry cloth to wipe clean. Allow surfaces to dry before using.
- For upholstered or soft-plastic surfaces, use a conditioner after sanitizing. Be sure to follow the instructions provided by the conditioner manufacturer to ensure proper use of the conditioner.
- Alternatively, you can make your own spray by mixing the proper ratio of isopropyl alcohol and distilled water to reach a 75% solution.

MAINTENANCE & CARE - CONTINUED

Aligning the Running Belt

Ensure the running belt is centered on your treadmill at all times. Running style and Non-level surface are two instances which may cause the belt to drift off center. Minor adjustments to the two bolts at the front of the treadmill are necessary when the belt has drifted off center (See Fig. A & B).

1. Press the Master Power Switch (located at the front of the treadmill) to ON position and ensure Safety Key is properly placed onto the console, press the START button to begin running, then increase the treadmill's speed to 1.9 mph.
2. Stand right behind the treadmill and to determine which side the belt is drifting.
3. If the belt drifts to the right, turn the right adjustment bolt clockwise a quarter turn, and the left adjustment bolt counterclockwise a quarter turn (See Fig. A). Running belt will move to the left gradually. Please repeat the aforementioned adjustment until the belt is back aligned at the center. Make equal times of turns on the right and left adjustment bolts to prevent overtightening the running belt.
4. If the belt drifts to the left, turn the right adjustment bolt counterclockwise a quarter turn, and the left adjustment bolt clockwise a quarter turn (See Fig. B). Running belt will move to the right gradually. Please repeat the aforementioned adjustment until the belt is back aligned at the center. Make equal times of turns on the right and left adjustment bolts to prevent overtightening the running belt.

DO NOT OVERTIGHTEN – Over tightening will cause belt damage and premature bearing failure. If you tighten the belt a lot and it still slips, the problem could actually be the drive belt - located under the motor cover - that connects the motor to the front roller. If that belt is loose it feels similar to the walking belt being loose. Tightening the motor belt should be done by a trained service person.

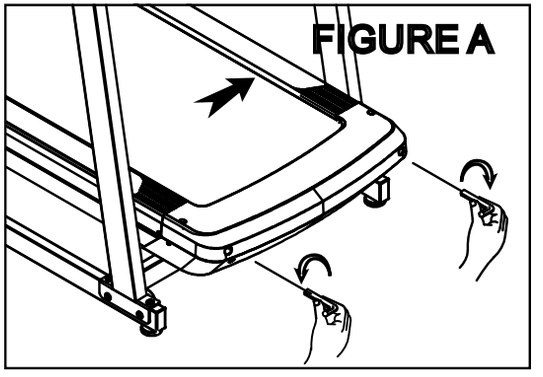

Drifts To The Right

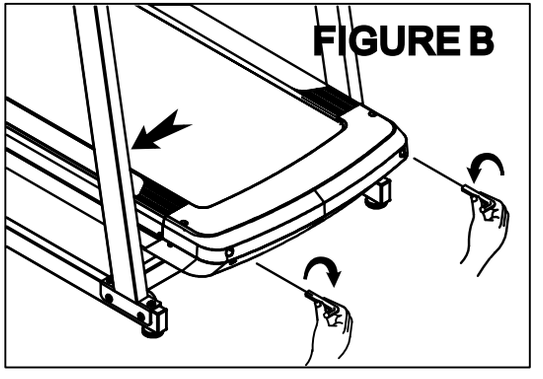

Drifts To The Left

MAINTENANCE & CARE - CONTINUED

Aligning the Running Belt Tension

Adjust the belt tension if it begins to slip on the rollers . This is important as it increased the longevity of the treadmills components .

Before adjusting belt tension, keep the belt loose

1. Turn the MASTER POWER SWITCH to the ON position and make sure safety key is pressed in.
2. Press START button to start running the belt, then increase speed to 2 MPH .
3. Turn both adjustment screws an equal amount, approximately one-quarter turn clockwise .
4. Slow the belt by holding onto the handrails and applying more weights as you walk, (as if you are walking downhill) . Then stepping heavily on the belt to see if the belt slips .
5. If the belt slips, adjust one-quarter turn clockwise and repeat STEP 4 if necessary .

   ALWAYS BE CAREFUL NOT TO OVERTIGHTEN THE RUNNING BELT.

MAINTENANCE & CARE - CONTINUED

Item	Daily (Before Use)	Daily (After Use)	Weekly	Monthly	3 Months	6 Months
Entire Machine	Examine if the frame is stable for exercise. Adjust balancer to make it stably positioned on the ground.	Use dry cloth to wipe and clear sweat and dust on the surface of machine.		Use damp cloth to clean. (Do not use Solubility Cleaners.) Use water for plastic parts. Use silicone oil or wax for metal parts.		
Location	Ensure enough safe space around the machine, and make sure no dangerous objects around.	Use wet cloth to clean the ground. Do not put wax on the ground.	Vacuum dust at the bottom and around the machine.			
Power Cable	Ensure power cable is well-plugged and not pressed by the machine.	Turn off the power or unplug power cable.				
Running Belt	Ensure no objects on the belt, and run the machine at 2-3 MPH to see if the belt drifts.	Use dry cloth to wipe and clear the surface of running belt.		Use damp cloth to clean (Do not use Solubility Cleaners).		
Running Belt Tension Adjustment	Check if running belt is slipping.					
Lubrication of Running Belt					Use a silicone lubricant to lubricate whenever reaching 112 miles.	
Side Panel				Check if they are well-fixed and make sure no breakdown on the panel.		
Bolt				Check if all bolts are firmly fastened and no rusting.		
The Inside of Motor Cover						Open motor cover and vacuum all dust.
Safety Key	Turn the power on and remove safety key to check if it is in normal function.	Make sure safety key is re-placed on the console.				

Running Deck Lubrication

Why lubricate?

If the lubricant dries out, the friction between the belt and the deck will rise and place undue stress on the drive motor, drive belt and electronic motor control board, which could result in catastrophic failure of these expensive components.

When to lubricate?

High-efficient and low-friction running deck is used on this machine. The deck comes pre-lubricated and subsequent lubrication should be done in every 112 miles, or very 3 months of operation, whichever comes first. Keeping the deck lubricated at the recommended intervals ensures the longest life possible for your treadmill.

What to lubricate?

Do not lubricate with other than our approved lubricant. Your treadmill comes with one 1 oz tube of silicone. For further lubrication, you may order from distributor for our silicone:

- 7 oz silicone in one bottle with 14" applicator
- 100% silicone, non-petroleum base, contains of no harmful solvents, non-toxic and nonflammable
- Pump action spray bottle
- Good for treadmill that used non-petroleum based lubricant

How to lubricate?

Follow below drawing, lift running belt as high as possible, wipe the deck and the edge of the belt with a clean lint free cloth to remove any dirt on both sides. Then inserting straw from silicone bottle from either side of the running belt to reach to the deck surface about 18 inches from motor cover, pump out the silicone of the tube across the deck, parallel to the motor cover, in about one foot line. The one foot line should be in the middle of the deck at approximately equal distance from both side edges of the belt. Repeat above procedures to distribute onto 3 spots on the running deck as shown on drawing. Once the silicone is applied, you should walk, not run, at low speed on the treadmill for at least 5 minutes to ensure it is evenly distributed.

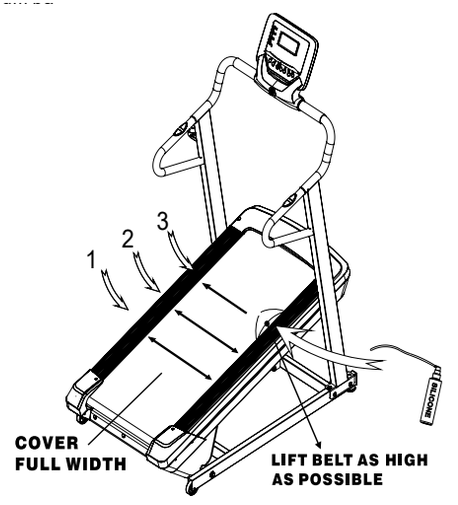

You want the lubricant to be applied about the spot that your feet would hit the belt as you are walking. This should be about 18 inches from the motor cover. You may walk on the treadmill to see where your feet land on the belt. Please note if you mostly run on the treadmill, the spot where your feet land may be different from the spot in walking. Note:

1. IF belt is stuck under side rail, use a screwdriver to lever out for easy lubrication

2. IF belt is not centered, please refer to Aligning The Running Belt.

Remarks:

If static symptom happens, adding silicone on the running deck will also help solve it.

DECK LUBRICATION

1. The word of 'LUBE' will flash in every 3 seconds on the console once accumulated running distance reaches 112 MPH to remind user to do the maintenance.
2. Press any button to jump out of the alert mode. Word of 'LUBE will show up again whenever the machine re-starts if the user doesn't eliminate the word by taking action of No. 3 as below.
3. Press " STOP & "SPEED Slow (-)" buttons at the same time to remove the word of 'LUBE', but distance will keep accumulating.

To ensure the longevity and proper function of your Hiker Treadmill, proper belt maintenance is required. You should regularly check between the Hiker Treadmill belt and the top of the Hiker Treadmill base for proper lubrication, and to ensure that no dirt or debris has become trapped. Keeping the deck clean and lubricated at the recommended intervals ensures the longest life possible for your unit. Should lubrication dry out, or dirt become trapped, the friction between the belt and deck increases. Increased friction places undue stress on the drive motor, drive belt, and electronic motor control board which could result in catastrophic failure of these essential, expensive components.

Failure to clean and lubricate the deck at regular intervals may void the warranty.

As a part of your routine maintenance schedule, belt lubrication and cleaning should be performed every 90 days, after 90 hours of use, or earlier if you notice that the deck is dry or dirty. Please also be sure to check belt lubrication before first use.

Do not lubricate with anything other than XTERRA Fitness approved lubricant. Your Hiker Treadmill comes with one tube of Hiker Treadmill belt lubricant.

Extra tubes can be ordered directly from: www.Xterrafitness.com, or by calling our customer service department at (800)258-8511.

Regularly check belt lubrication by completing the following steps:

1. Ensure that your machine is off, and that the power cord is unplugged to minimize risk of injury.
2. Reach between the running belt and the top of the Hiker Treadmill base to verify that lubrication is present.

BELT AND DECK CLEANING

Cleaning and Inspecting the Running Belt

1. Turn off power and unplug from electrical outlet.
2. Carefully position the treadmill on its side.
3. Use a damp cloth to wipe off the inside of the running belt. Carefully rotate the running belt by hand to clean the entire inside face. Return treadmill to its upright Position.
4. If running belt edges are frayed, check the running belt adjustment.
5. If seams are splitting, call your retailer or nearest authorized service center.

Cleaning

1. Firstly, make sure the treadmill is off and unplugged from the electrical outlet .
2. To remove dust, use a small vacuum nozzle to carefully vacuum around all visible components .
3. To remove film or dust, use a slightly damp rag with a mild cleaning agent sprayed onto the rag only .
4. Be careful not to immerse any treadmill component with any liquids .

Inspect Fasteners and Wiring

1. Check that all fasteners are properly tightened and all wiring is securely in place . To avoid damaging fasteners, do not over tighten .

EXPLODED VIEW DIAGRAM

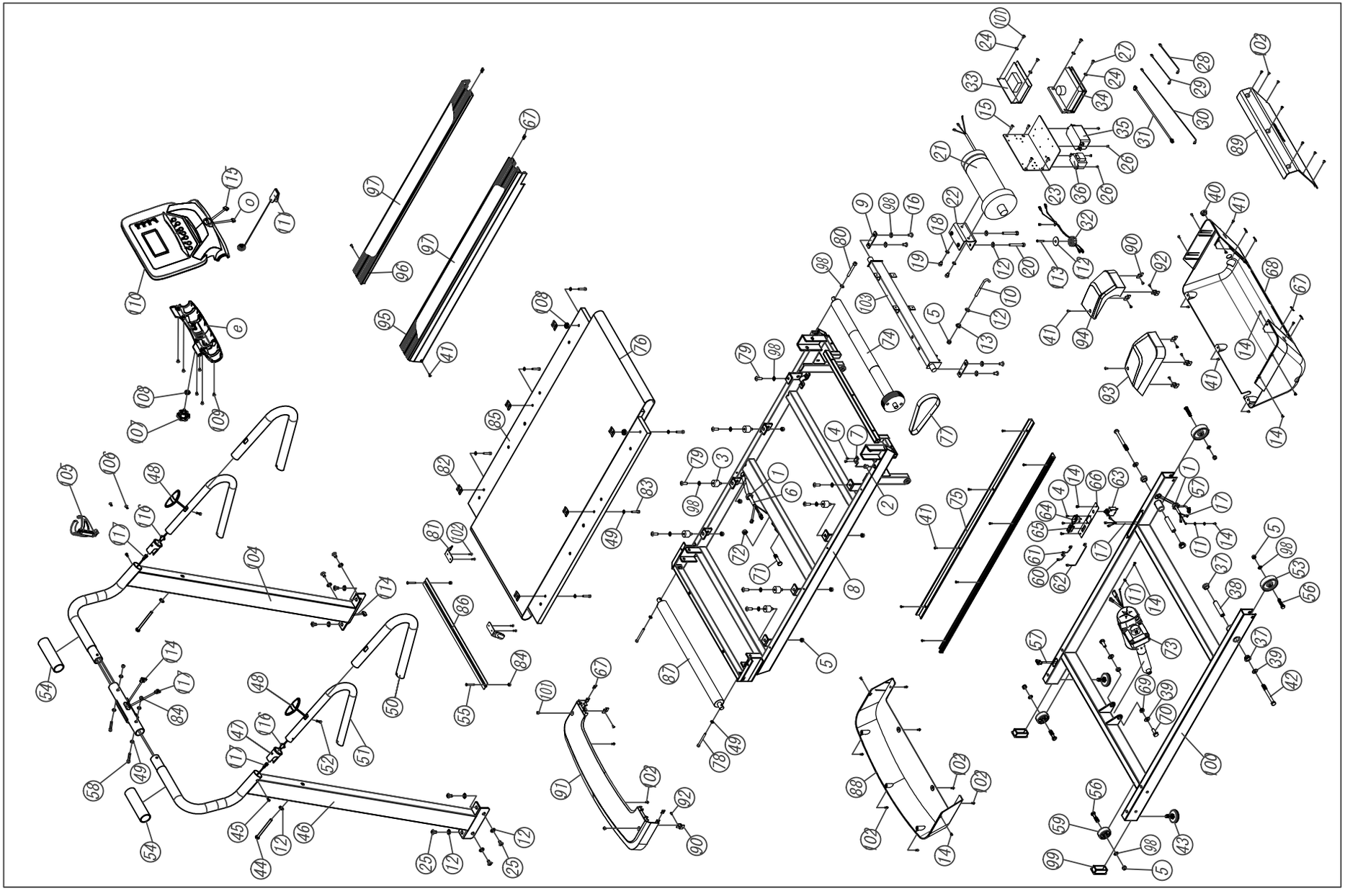

WARRANTY - RESIDENTIAL

Effective May 29, 2025- **TR75H Hiker Treadmill LIMITED WARRANTY**

XTERRA Fitness Inc. warrants all its home use Hiker Treadmill parts for a period of time listed below, from the date of retail sale, as determined by a sales receipt or in the absence of a sales receipt, eighteen (18) months from the original factory shipping date. XTERRA Fitness's responsibilities include providing new or remanufactured parts, at XTERRA Fitness's option, and technical support to our independent dealers and servicing organizations. In the absence of a dealer or service organization, these warranties will be administered by XTERRA Fitness directly to a consumer. The warranty period applies to the following components:

Home Use Limited Warranty

Warranty	Frame	Parts	Labor
Residential	Lifetime	2 Years	1 Year

RESPONSIBILITIES OF THE CONSUMER

This warranty applies only to products in ordinary household use, and the consumer/facility is responsible for the items listed below:

1. Proper use of the Hiker Treadmill in accordance with the instructions provided in this manual
2. Proper installation in accordance with instructions provided with the Hiker Treadmill and with all local electric codes.
3. Expenses for making the Hiker Treadmill accessible for servicing, including any item that was not part of the Hiker Treadmill at the time it was shipped from the factory.
4. Damages to the Hiker Treadmill finish during shipping, installation or following installation.
5. Routine maintenance of this unit as specified in this manual.

WARRANTY - CONTINUED

What is not covered?

EXCLUSIONS

This warranty does not cover the following:

1. CONSEQUENTIAL, COLLATERAL, OR INCIDENTAL DAMAGES SUCH AS PROPERTY DAMAGE AND INCIDENTAL EXPENSES RESULTING FROM ANY BREACH OF THIS WRITTEN OR ANY IMPLIED WARRANTY.
   Note: Some states do not allow the exclusion or limitation of incidental or consequential damages, so this limitation or exclusion may not apply to you.
2. Service call reimbursement to the consumer. Service call reimbursement to the dealer that does not involve malfunction or defects in workmanship or material, for units that are beyond the warranty period, for units that are beyond the service call reimbursement period, for Hiker Treadmill not requiring component replacement, or Hiker Treadmill not in ordinary household or light commercial use.
3. Damages caused by services performed by persons other than authorized XTERRA Fitness service companies; use of parts other than original XTERRA Fitness parts; or external causes such as corrosion, discoloration of paint or plastic, alterations, modifications, abuse, misuse, accident, improper maintenance, inadequate power supply, or acts of God.
4. Products with original serial numbers that have been removed or altered.
5. Products that have been: sold, transferred, bartered, or given to a third party.
6. XTERRA Fitness reserves the right to request proof of purchase if no warranty record exists for the product.
7. THIS WARRANTY IS EXPRESSLY IN LIEU OF ALL OTHER WARRANTIES EXPRESSED OR IMPLIED, INCLUDING THE WARRANTIES OF MERCHANTABILITY AND/OR FITNESS FOR A PARTICULAR PURPOSE.
8. Product use in any environment other than a residential setting or non-dues paying facility with 5 hours use or less per day.
9. Warranties outside of the United States may vary. Please contact your local dealer for details.

Product features or specifications as described or illustrated are subject to change without notice. All warranties are made by XTERRA Fitness, Inc. This warranty applies only in the 48 contiguous United States. NOTE: This does not include Alaska or Hawaii.

WARRANTY - CONTINUED

Responsibilities of the Owner

SERVICE

Keep your bill of sale. Twelve (12) months from the date on the bill of sale or eighteen (18) months from the date of factory shipping as determined by the serial number establishes the labor warranty period should service be required. If service is performed, it is in your best interest to obtain and keep all receipts. This written warranty gives you specific legal rights. You may also have other rights that vary from state to state. Service under this warranty must be obtained by following these steps, in order:

1. Contact your selling authorized XTERRA Fitness dealer. OR
2. Contact your local authorized XTERRA Fitness service organization.
3. If there is a question as to where to obtain service, contact our service department at (870) 935-1107.
4. XTERRA Fitness' obligation under this warranty is limited to repairing or replacing, at XTERRA Fitness' option, the product through one of our authorized service centers. All repairs must be preauthorized by XTERRA Fitness. If the product is shipped to a service center freight charges to and from the service center will be the customer's responsibility. For replacement parts shipped while the product is under warranty, the customer will be responsible for shipping and handling charges. For in-home service, the customer will be responsible for a trip charge. There will be an additional trip charge if the customer is located over 100 miles from the nearest service center.
5. The owner is responsible for adequate packaging upon return to XTERRA Fitness. XTERRA Fitness is not responsible for damages in shipping. Make all freight damage claims with the appropriate freight carrier. DO NOT SHIP ANY UNIT TO OUR FACTORY WITHOUT A RETURN AUTHORIZATION NUMBER. All units arriving without a return authorization number will be refused.

For any further information, or to contact our service department by mail, send your correspondence to:

XTERRA Fitness, Inc.

P.O. Box 2037

Jonesboro, AR 72402-2037

Product features or specifications as described or illustrated are subject to change without notice. All warranties are made by XTERRA Fitness, Inc. This warranty applies only in the 48 contiguous United States. NOTE: This does not apply to Alaska or Hawaii.

TROUBLESHOOTING

- E1 (Error 1): When the machine starts but computer could not read the signal from sensor for 7 seconds, E1 will be shown on the computer.

- E6 (Error 6): When the machine starts but computer could not read the VR signal from incline motor for 6 seconds, E6 will be shown on the computer. If any above trouble happens, please consult the distributor.

- E3 (Error 3): E3 shows when the cable from computer and control box is not well-connected or damaged. If the cable works well, check if the computer or control box is damaged.

- SMELL: If any smell comes out from motor, please firstly spray out some silicone on the running board (Please refer to RUNNING BOARD MAINTENANCE), and see if the situation improves. Then consult the distributor for necessary help.

3000 Nestle Road Jonesboro, AR 72401 | Phone: 800-258-8511 | Fax: 870-935-7611

©2025 All Rights Reserved. TR75H Owner's Manual