XTERRA FITNESS

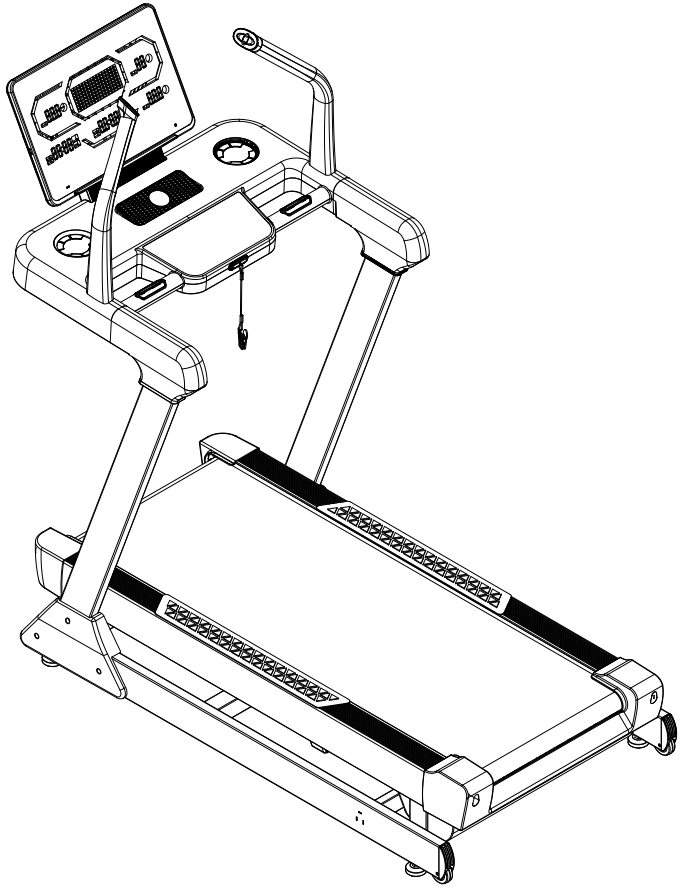

TR85H HIKER TREADMILL

TR85H_OwnersManual_185416_20260817

Online Support

If you require assistance or are experiencing issues with your XTERRA Machine, please contact customer care for additional help.

1-870-336-4286

questions@xterrafitness.com

Warranty Registration

Scan to quickly and easily register your new XTERRA Fitness machine.

Table of Contents

Product Registration 3

Warning / Safety Instructions

Product Labels 4

Safety Instructions 5

Electrical Safety 6

Grounding & Location Requirements 7

Parts and Assembly

Parts of your Unit 8

Parts Included 9

Assembly 11

Setting up your Machine 19

Safety Key 20

Technology and Features

About Your Machine 21

Console Screen - Overview 22

Console Features 23

Initial Specifications 24

Key Functions 26

Programs

Programs 28

Engineering Mode 43

Bluetooth App 47

Wearing the Chest Strap 49

Heart Rate Exertion 50

Maintenance

Maintenance & Care 54

Deck Lubrication 56

Belt & Deck 57

Exploded View Diagram 58

Warranty & Troubleshooting

Warranty 59

Troubleshooting 62

PRODUCT REGISTRATION

Congratulations on your new Hiker Treadmill, and welcome to the XTERRA Fitness family!

Thank you for your purchase of this quality unit from XTERRA Fitness. Your new unit was manufactured by one of the leading fitness manufacturers in the world and is backed by one of the most comprehensive warranties available. XTERRA Fitness will do all we can to make your ownership experience as pleasant as possible for many years to come.

If you have questions, or if parts are missing or damaged, or you require customer service, call (870) 336-4286. Please have your model number and serial number handy when you call.

Please take a moment at this time to record the name of the dealer, their telephone number, and the date of purchase below to make any future, needed contact easy. We appreciate your support and we will always remember that you are the reason that we are in business.

Serial Number	
Date of Purchase	
Dealer / Place of Purchase	

WARRANTY REGISTRATION

Use your smartphone to scan the QR code above to quickly and easily register your new XTERRA Fitness machine.

You can also go to **xterrafitness.com/warranty** under the Support tab to register online.

Version: 1.0
Revision: 08/17/26

PRODUCT LABELS

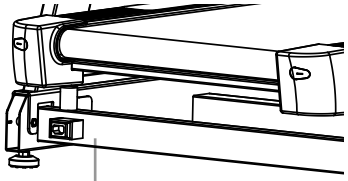



SERIAL NUMBER STICKER

This sticker will be found on the frame near the power switch. Please record the number below the barcode for the purpose of registering your Hiker Treadmill's warranty.

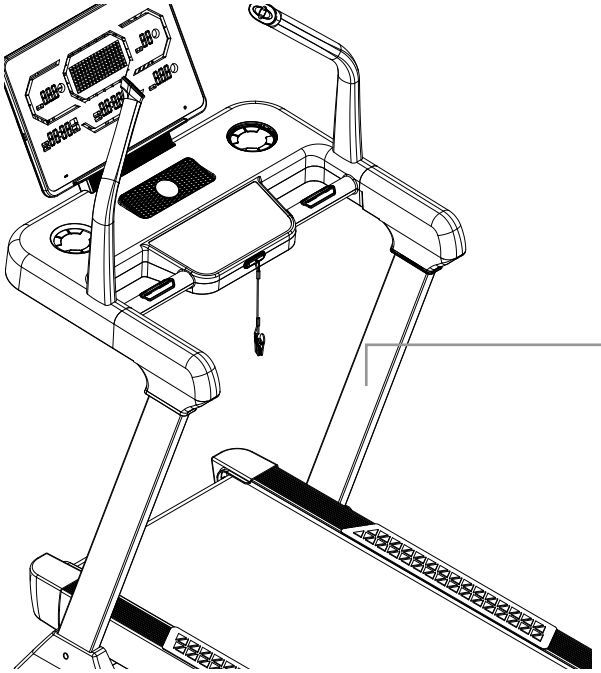

PROPOSITION 65 WARNING

This sticker will be found on the frame near the power switch. The State of California requires us to inform you that this unit was manufactured using chemicals that could cause harm with improper use.



SAFETY WARNING STICKER

This sticker will be found on the interior side of your Hiker Treadmill's upright. The same warning can be found in this manual. Please read and be aware of the precautions before operating your unit.

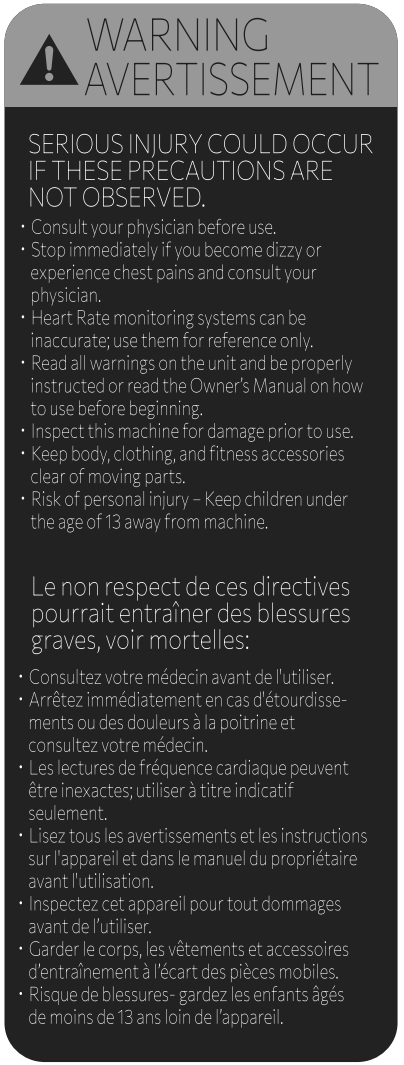

SAFETY INSTRUCTIONS

When using an electrical appliance, basic precautions should always be followed, including the following:
Read all instructions before using this appliance.

DANGER - To reduce the risk of electric shock:
Always unplug this appliance from the electrical outlet immediately after using and before cleaning.

WARNING - To reduce the risk of burns, fire electric shock, or injury to persons:

1. An appliance should never be left unattended when plugged in. Unplug from outlet when not in use, and before putting on or taking off parts.
2. Do not operate under blanket or pillow. Excessive heating can occur and cause fire, electric shock, or injury to persons.
3. This exercise equipment is not intended for use by persons with reduced physical, sensory or mental capabilities, or lack of experience and knowledge.
4. Use this appliance only for its intended use as described in this manual. Do not use attachments not recommended by the manufacturer.
5. Never operate this appliance if it has a damaged cord or plug, if it is not working properly, if it has been dropped or damaged, or dropped into water. Return the appliance to a service center for examination and repair.
6. Do not carry this appliance by supply cord or use cord as a handle.
7. Keep the cord away from heated surfaces.
8. Never operate the appliance with the air openings blocked. Keep the air openings free of lint, hair, and the like.
9. Never drop or insert any object into any opening.
10. Do not use outdoors.
11. Do not operate where aerosol (spray) products are being use or where oxygen is being administered.
12. Connect this appliance to a properly grounded outlet only. See Grounding Instructions.
13. The appliance is intended for household use.
14. To disconnect, turn all controls to the off position, then remove the plug from the outlet.
15. Do not operate equipment on deeply padded, plush or shag carpet. Damage to both carpet and equipment may result.
16. Before beginning this or any exercise program, consult a physician. This is especially important for persons over the age of 35 or persons with pre-existing health conditions.
17. Keep hands away from all moving parts.
18. The pulse sensors are not medical devices. Various factors, including the user's movement, may affect the accuracy of heart rate readings. The pulse sensors are intended only as exercise aids in determining heart rate trends in general.
19. Do not attempt to use your equipment for any purpose other than for the purpose it is intended.
20. Do not operate tablet or laptop when you are running, walking or climbing at high speed.
21. Wear proper shoes. High heels, dress shoes, sandals or bare feet are not suitable for use on your equipment. Quality athletic shoes are recommended to avoid leg fatigue.
22. **User Weight Limit: 300 lb.**

Please ensure that you review and adhere to the user weight restrictions and power requirements of your new machine. Failure to do so may result in serious injury or damage to your machine.

ELECTRICAL SAFETY

WARNING!

Route the power cord away from any moving part of the unit including the incline mechanism and transport wheels.

NEVER remove any cover without first disconnecting AC power. If voltage varies by ten percent (10%) or more, the performance of your unit may be affected. **Such conditions are not covered under your warranty.** If you suspect the voltage is low, contact your local power company or a licensed electrician for proper testing.

NEVER expose this unit to rain or moisture. This product is **NOT** designed for use outdoors, near a pool or spa, or in any other high humidity environment. The temperature specification is 40 degrees C, and humidity is 95%, non-condensing (no water drops forming on surfaces).

Circuit breakers: Avoid AFCI/GFCI circuit breakers if possible. These breakers may trip occasionally during exercise because of the high inrush currents of the unit drive electronics and motor. This is an issue that affects all unit brands. New laws in your area may require these breakers. If you do have these breakers and outlets in your home, and are experiencing nuisance tripping, you should check if there are any other devices plugged into the same circuit. Some examples of devices that may also cause tripping are fluorescent lights with electronic ballasts, coffee maker, space heater, hair drier.

Optimally the unit should be the only device plugged into the circuit. Our units have surge suppressors built in to help avoid nuisance tripping. We have tested several AFCI/GFCI breakers and outlets with our products. Brands we have tested are: Eaton (Cutler Hammer Series), Leviton (Smart lock pro) and Schneider Electric (Canadian home series). These breakers do not trip in our testing, when connected to our units, as long as no other devices are plugged into the same circuit.

1. NEVER operate this unit without reading and completely understanding the results of any operational change you request from the computer.
2. Understand that changes in speed and incline do not occur immediately. Set your desired work level on the computer console and release the adjustment key. The computer will obey the command gradually.
3. NEVER use your unit during an electrical storm. Surges may occur in your household power supply that could damage unit components. Unplug the unit during an
electrical storm as a precaution.
4. Use caution while participating in other activities while walking on your unit; such as watching television, reading, etc. These distractions may cause you to lose balance which may result in serious injury.
5. Do not use excessive pressure on console control keys. They are precision set to function properly with little finger pressure.

GROUNDING & LOCATION REQUIREMENTS

This product must be grounded. If it malfunction or breakdown, grounding provides a path of least resistance for electric current to reduce the risk of electric shock. This product is equipped with a cord having an equipment-grounding conductor and a grounding plug. The plug must be plugged into an appropriate outlet that is properly installed and grounded in accordance with all local codes and ordinances.

DANGER - Improper connection of the equipment-grounding conductor can result in a risk of electric shock. Check with a qualified electrician or serviceman if you are in doubt as to whether the product is properly grounded. Do not modify the plug provided with the product – if it will not fit the outlet, have a proper outlet installed by a qualified electrician.

This product is for use on a nominal 220-240/100-120 volt circuit and has a grounding plug that looks like the plug illustrated in sketch A in following figure. Make sure that the product is connected to an outlet having the same configuration as the plug. No adapter should be used with this product.

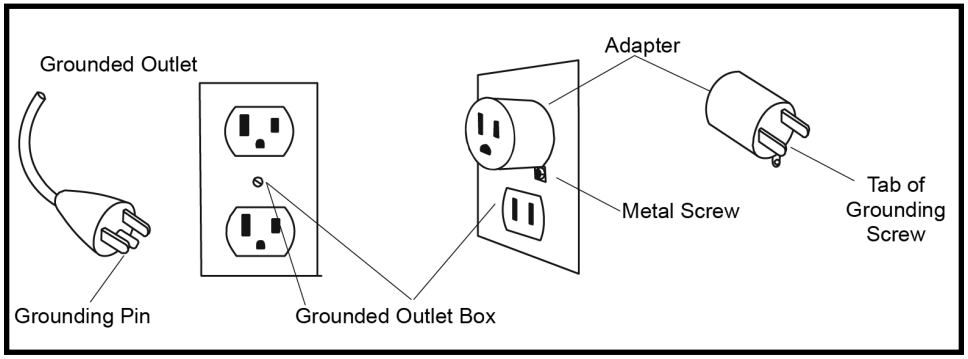

Location Requirements

After assembling your Hiker Treadmill, you'll need to make sure you've installed it in a safe area.

- We recommend that you leave an area of at least 24in on the front, and sides of your machine. The front of the unit is where the motor is located.
- We recommend that you leave an area of at least 6ft behind the Hiker Treadmill.
- Install your Hiker Treadmill in an area where children and pets cannot access it.
- Always keep the area around your Hiker Treadmill clear of furniture, exercise equipment and other debris.
- Do not install your Hiker Treadmill on deeply padded, plush, or shag carpet.

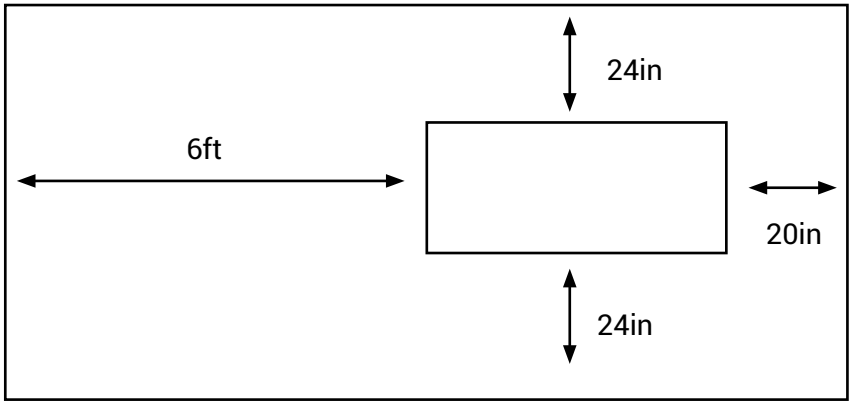

PARTS OF YOUR UNIT

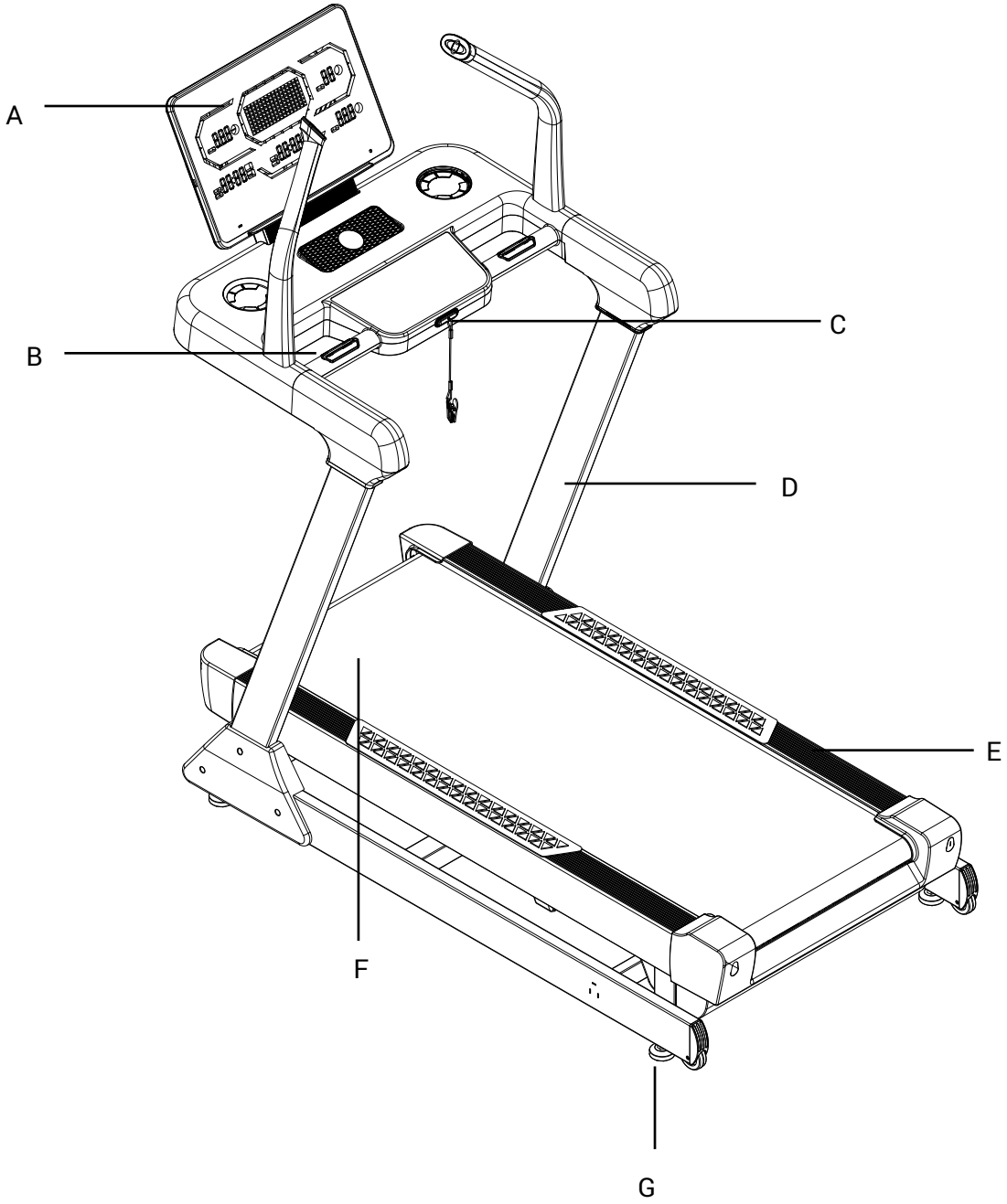

A. LCD Window
B. Hand Pulse Grips
C. Safety Key
D. Upright
E. Side Rails
F. Belt
G. Leveler

PARTS INCLUDED

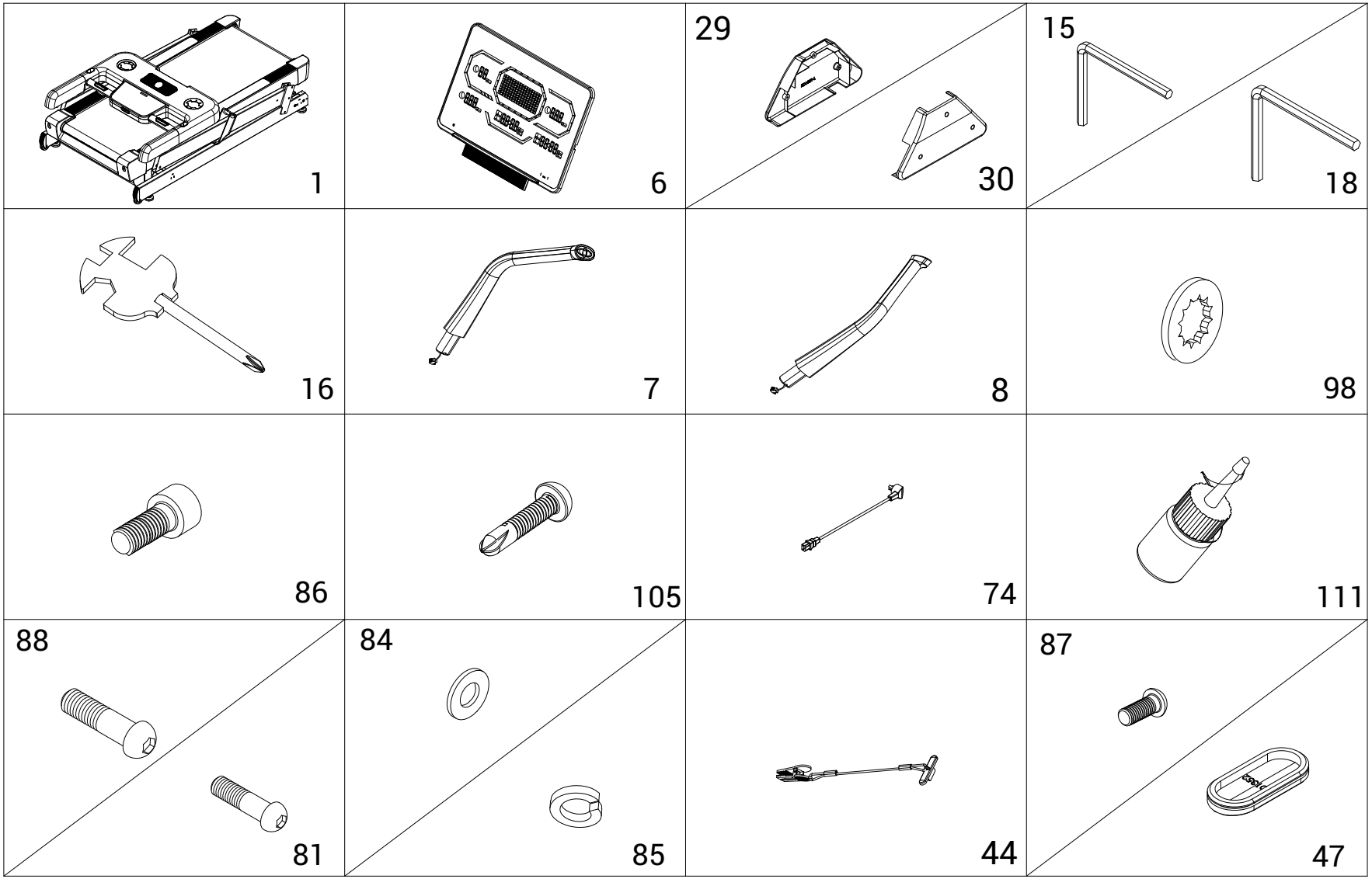

PARTS INCLUDED

NO	DES.	Specification	Nos.
1	Main frame		1
6	Display		1
29	Left base cover		1
30	Right base cover		1
15	5# Wrench		1
18	6# Wrench		1
16	Wrench with screw driver		1
7	Left Handlebar		1
8	Right Handlebar		1
98	Lock washer	8	6
86	Bolt	M8*15	4
105	Screw	4.2*15	8
74	Power Wire		1
111	Oil bottle		1
88	Bolt	M8*60	3
81	Bolt	M8*45	4
84	Flat Washer	8	8
85	Spring Washer	8	8
44	Safety Key		1
87	Bolt	M8*20	6
47	Hole Plug		2

FIXING TOOLS:

- 5# Allen Wrench 5mm (1pc)
- 6# Allen Wrench 6mm (1pc)
- Wrench with screw driver S=13, 14, 15 (1pcs)

Notice: Do not turn on power before complete assembly

ASSEMBLY - STEP ONE

1. Open the carton, take out the above spare parts, put the Main Frame on the level ground.

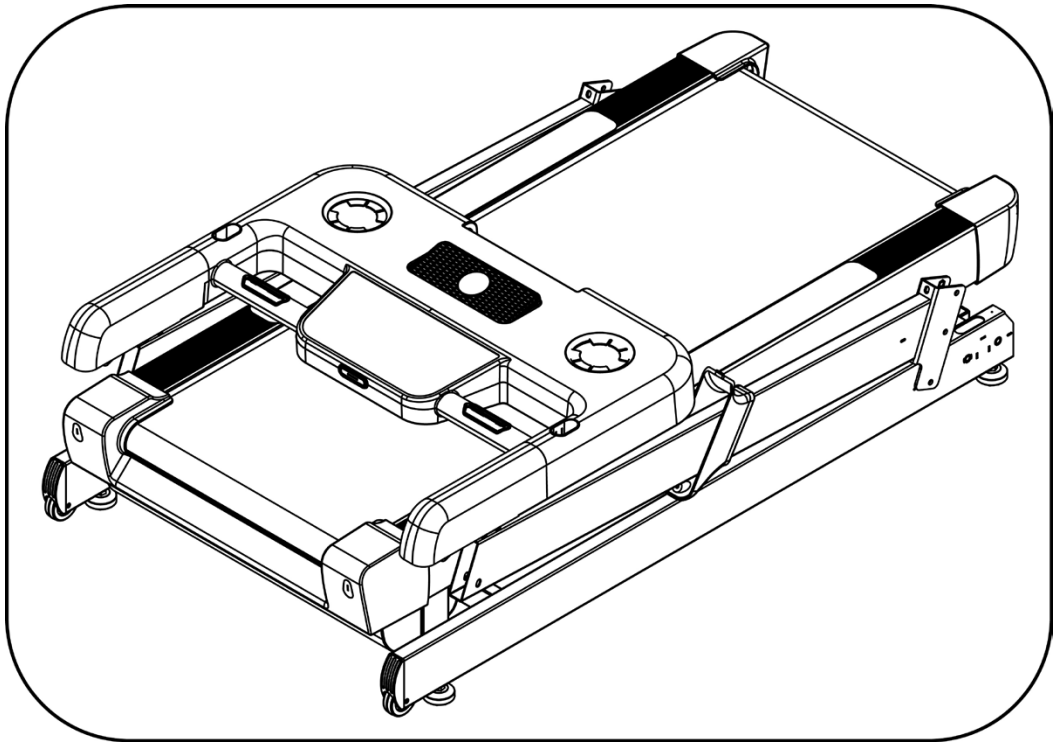

ASSEMBLY - STEP TWO

1. Use Wrench(18), Bolt(81) and Washer(98) to lock the upright into the base frame.
2. Use Wrench(18), Bolt(87) and Washer(98) to lock the upright into the base frame; Left side the same as the right side.

   Notice: Hold the uprights with one hand to avoid injury

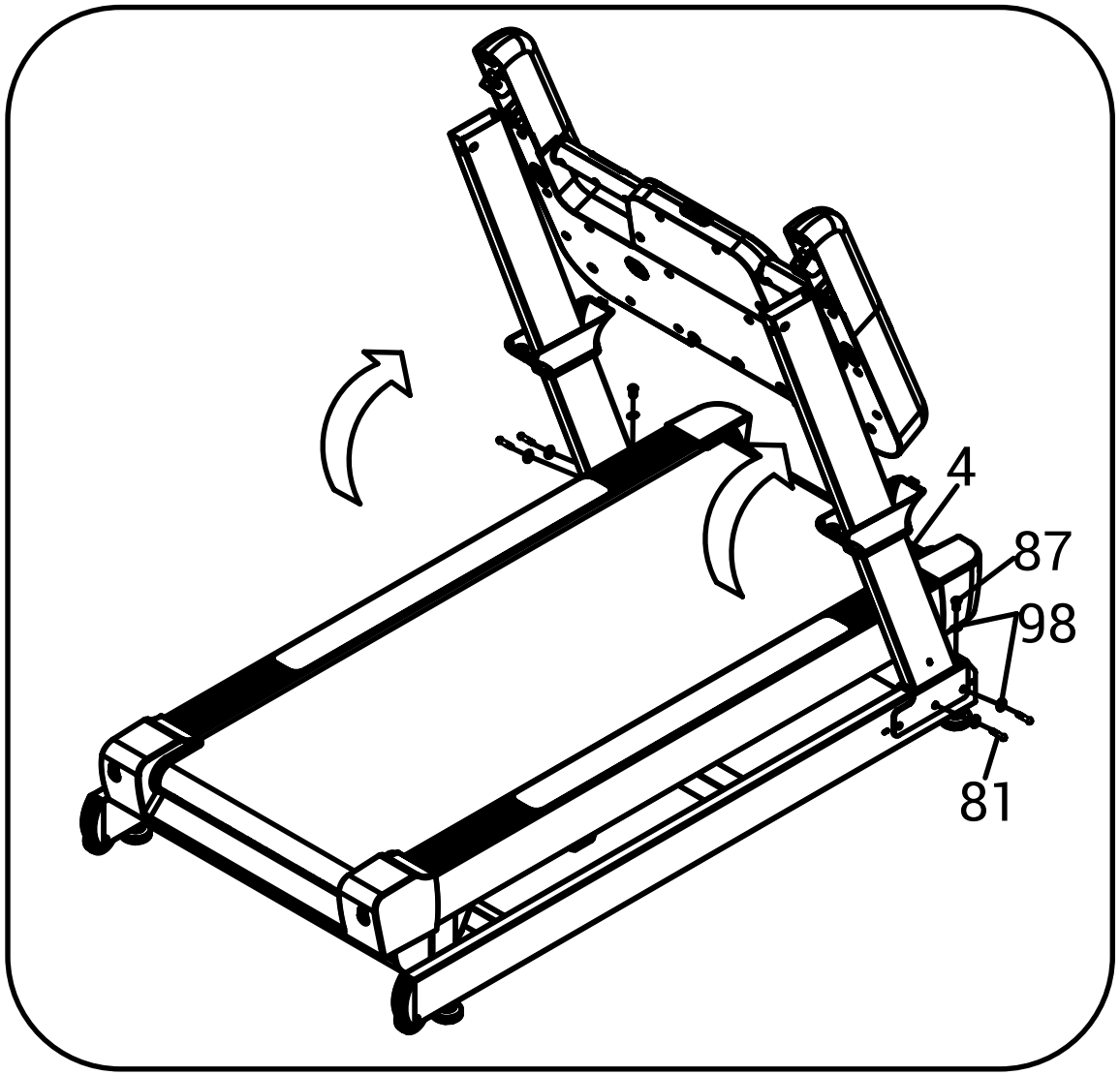

ASSEMBLY - STEP THREE

1. Use Wrench(18), Bolt(87), and Washer(84, 85) to lock the console into the upright. Left side the same as the right side.

   Notice: Hold the console with one hand to avoid injury.

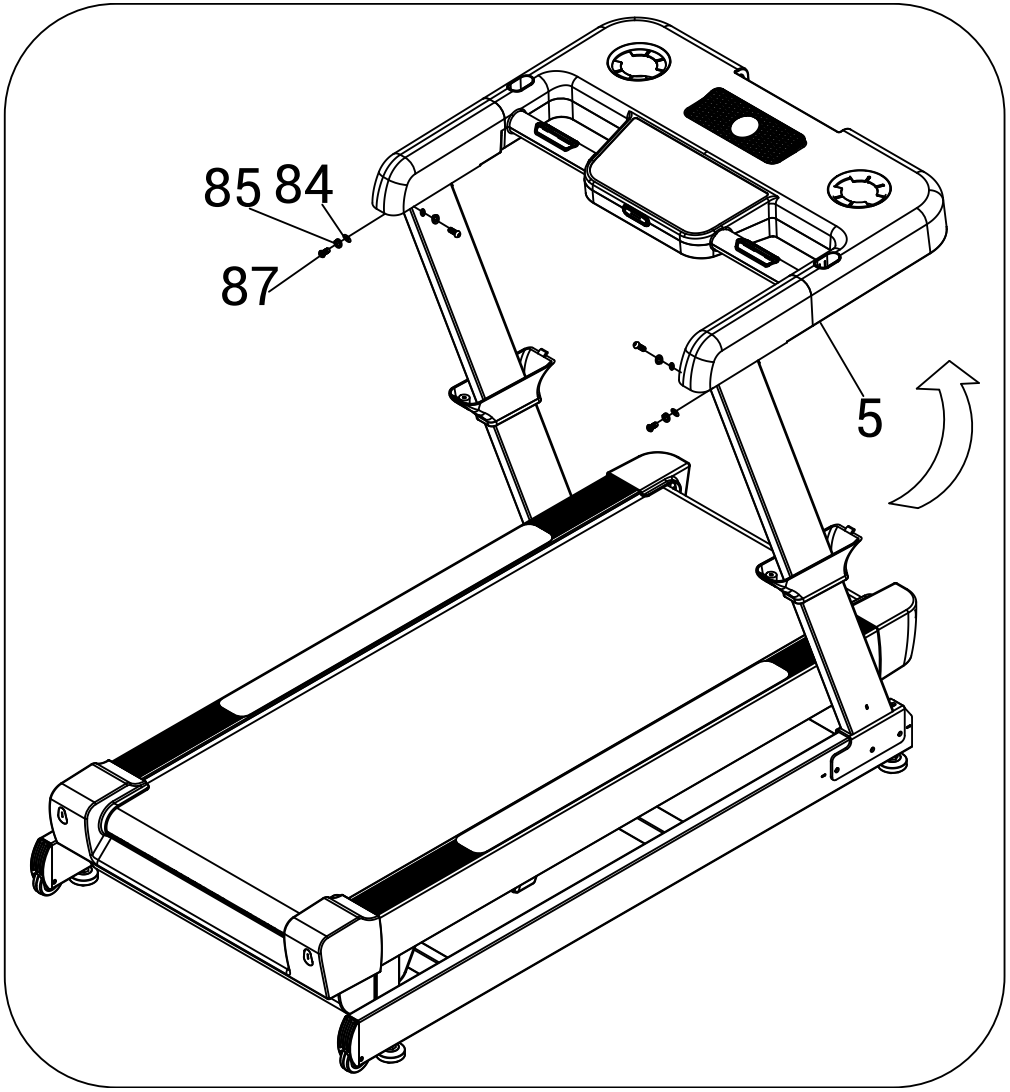

ASSEMBLY - STEP FOUR

1. Connect the Communication Line (A) end of Display (6) to the Communication Line (B) end of the electronic wire. Then insert the Display (6) into console, tucking the excess line inside the console.

   The communication lines should easily connect, if they do not connect easily, they are positioned incorrectly. Do not force them together.

2. Using the Wrench (18), insert the Screw (88) through the console and the display, and lock it to the console.

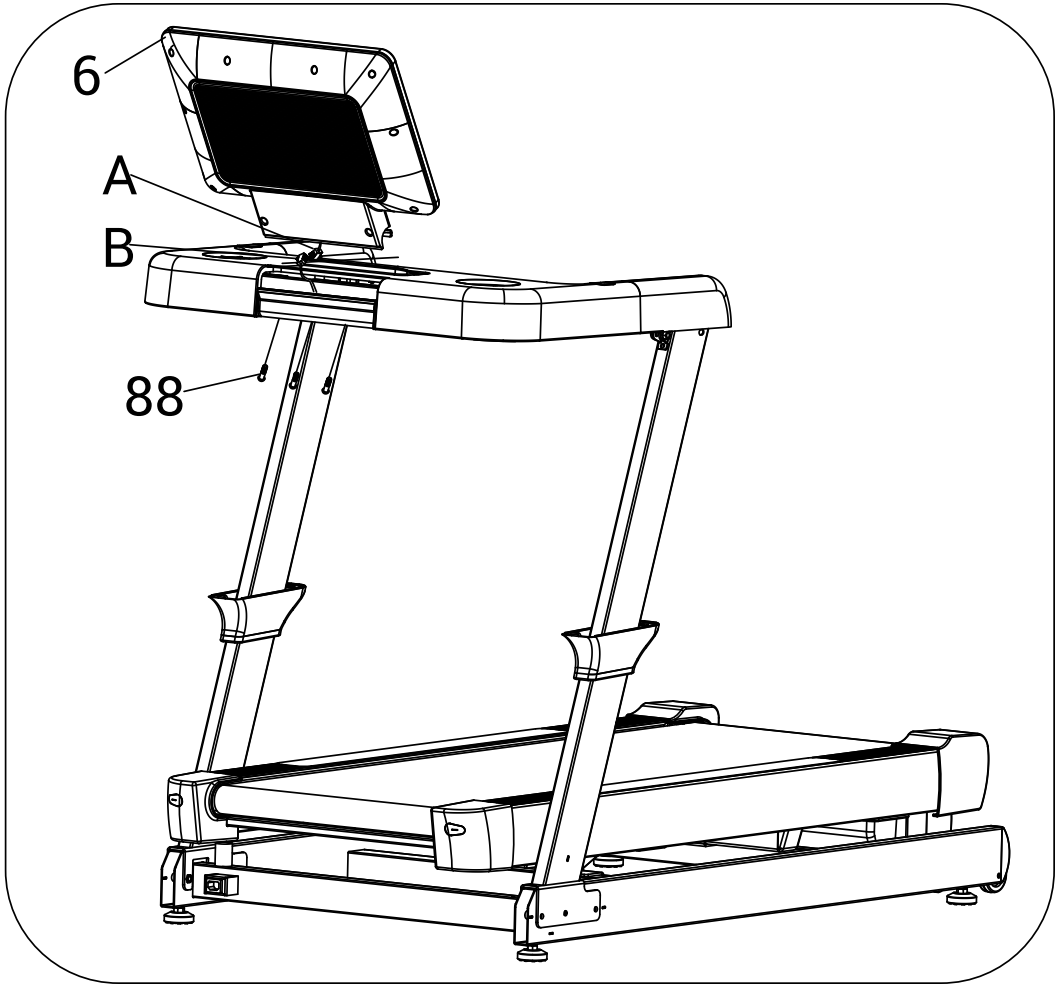

ASSEMBLY - STEP FIVE

1. Connect the Communication Line (A) end of the Left Front Armrest (7) and the Communication Line (B) end of the electronic wire, then insert the Left Front Armrest (7) into the console, and plug the excess line into the console.

   The communication lines should easily connect, if they do not connect easily, they are positioned incorrectly. Do not force them together.

2. Use the Wrench (15) to pass Screw (86), Spring Washer (85) and Flat Washer (84) through the console and the Left Front Armrest (7), and lock it on the console.

3. Insert the Hole Plug (47) into the console.

4. The right side is the same as the left side, as shown in the left view.

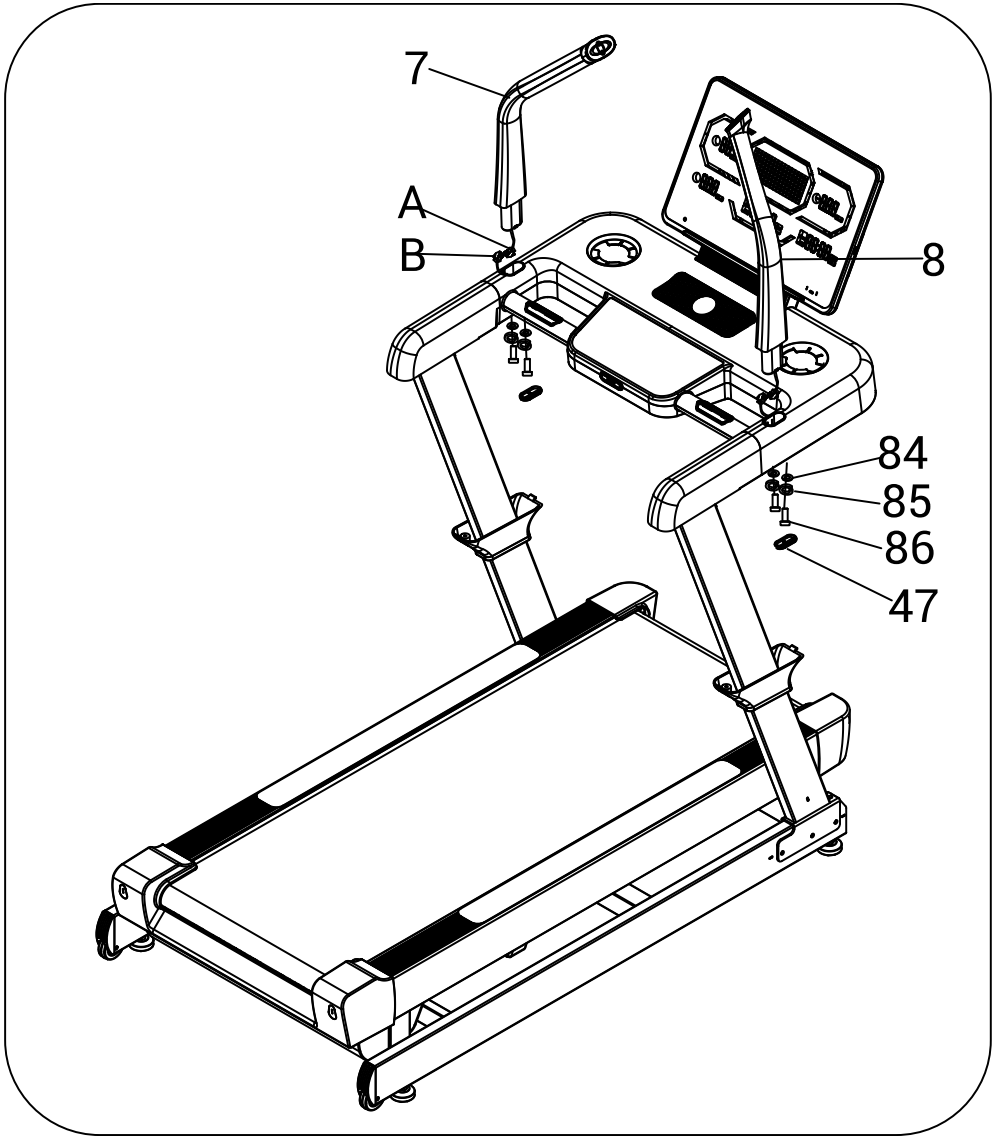

ASSEMBLY - STEP SIX

1. Use the Screw (105) with Wrench (16) to lock the Right Base Cover (30) to the right column and base.
2. Use the Screw (105) with Wrench (16) to lock the Decoration Cover (36) to the console.
3. The left side is the same as the right side, as shown in the left view.

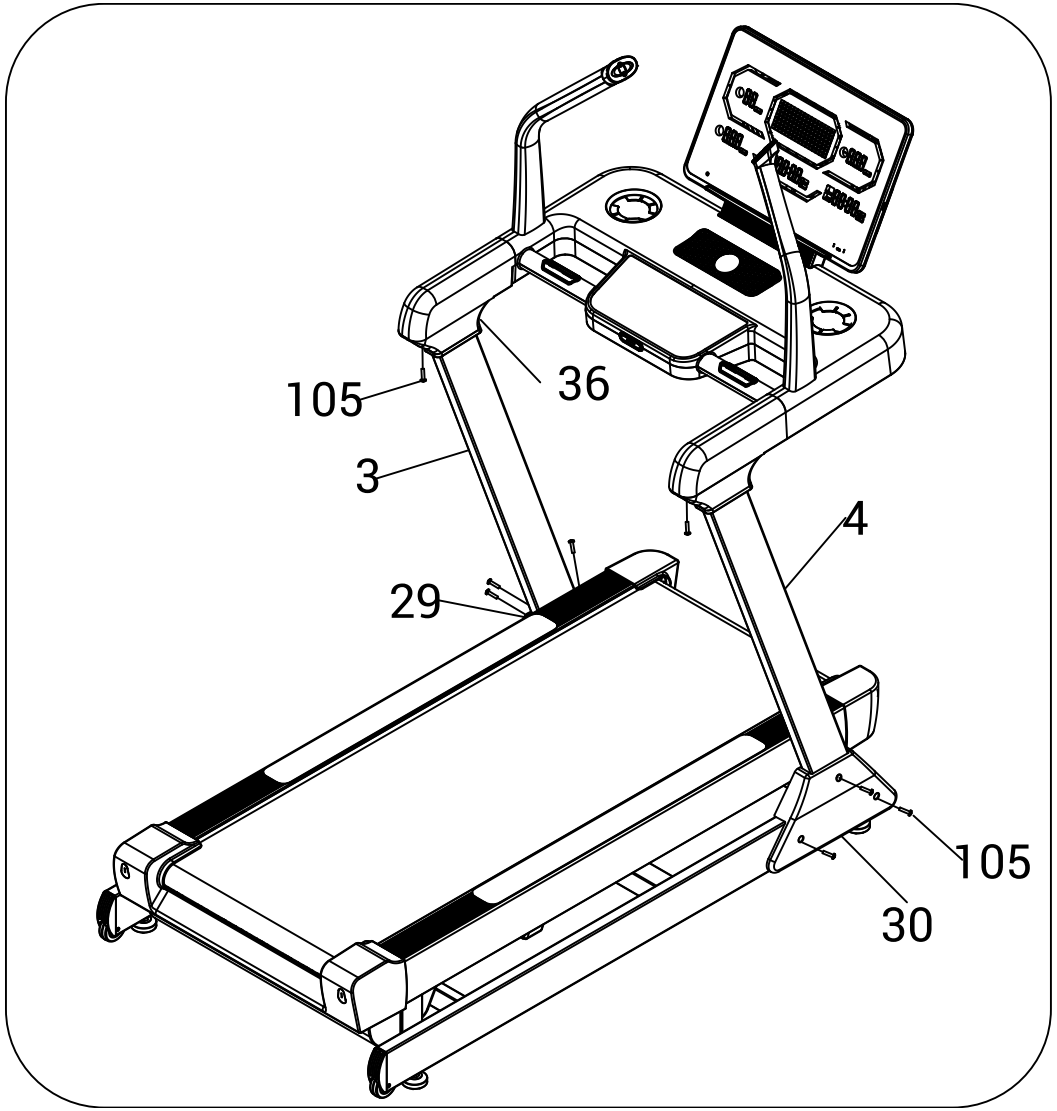

ASSEMBLY - STEP SEVEN

1. Plug the Power Cord (74) into the power cord socket of the main frame.

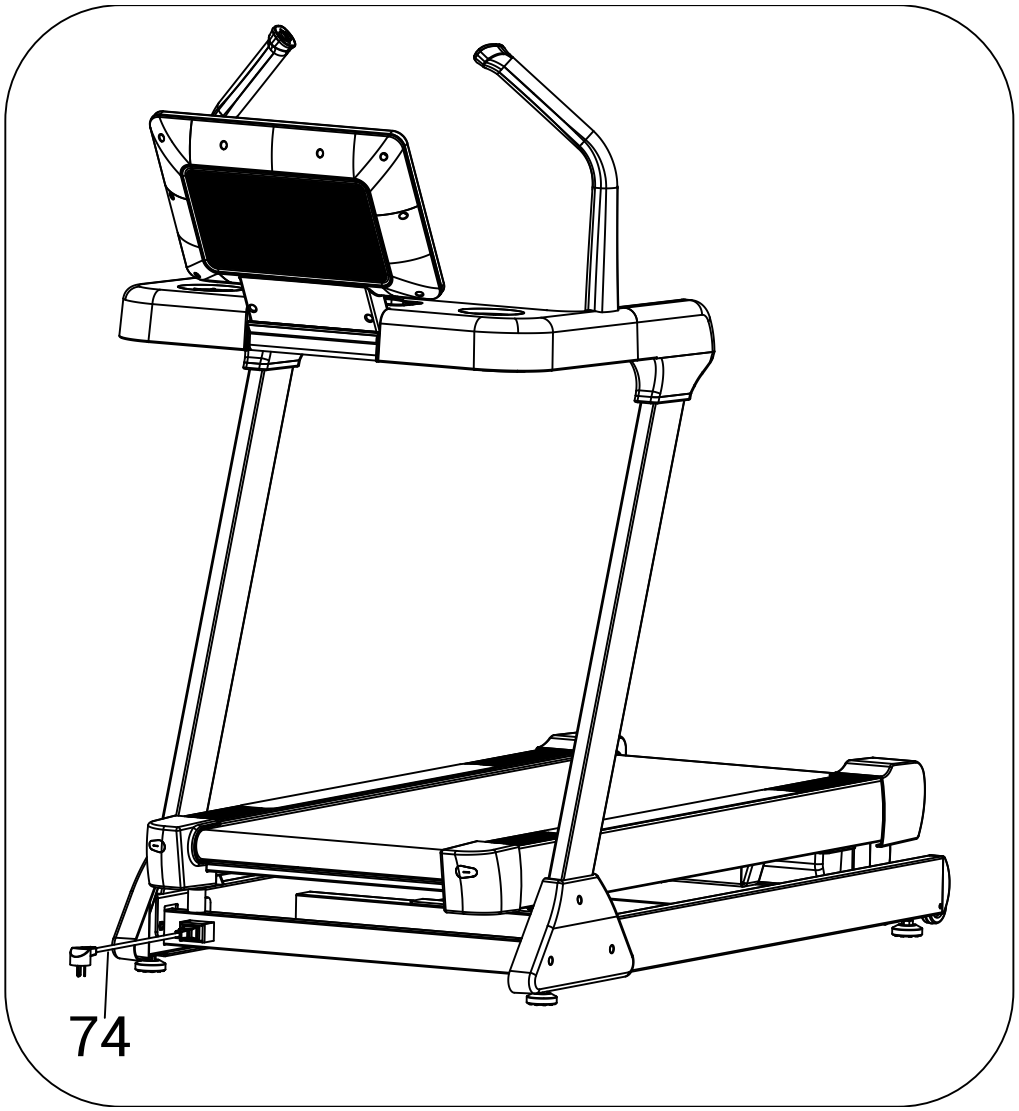

ASSEMBLY - STEP EIGHT

1. Put the Safety Key (44) on the computer.
2. Turn on the Power Switch (A).

   ATTENTION: Confirm that assembly is complete as instructed in the above steps and ensure that all bolts are tight. Before using the treadmill, read all instructions carefully.

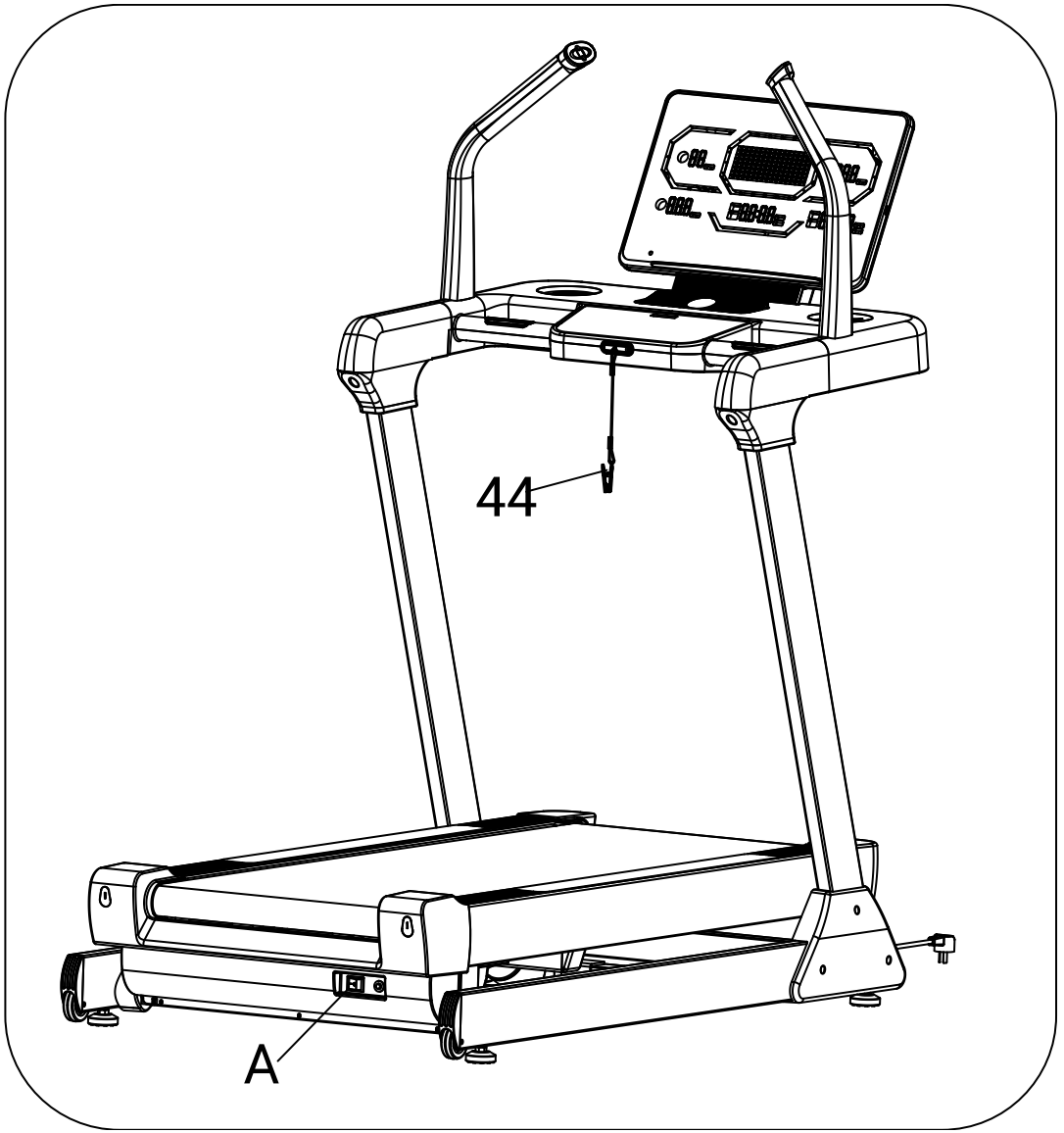

SETTING UP YOUR TREADMILL

Before Running

1. Read the manual first for familiarization of the computer and other important features
2. Before starting the treadmill, always stand on two side rails on both sides (not on the running belt) as shown on drawing.
3. Press in Safety Key underneath desktop, and have safety clip securely attach to an article of your clothing.
4. Start the treadmill and allow it to reach at speed of at least 0.6 mph, hold your hand on the handlebar then walk on the running belt to start your exercise program.

After Running

1. If you hear any abnormal noise from motor, please stop using and contact Xterra customer service.
2. Please refer to the RUNNING DECK LUBRICATION section to do necessary periodical maintenance for long-term and functional operation.

NOTE: FAILURE TO COMPLETE PERIODIC MAINTENANCE WILL VOID THE WARRANTY. SEE THE MAINTENANCE & CARE SECTION OF THE MANUAL.

SAFETY KEY

A safety tether cord is provided with this unit.
It is a simple magnetic design that should be used at all times.
It is for your safety should you fall or move too far back on the tread-belt.
Pulling this safety tether cord will stop tread-belt movement.

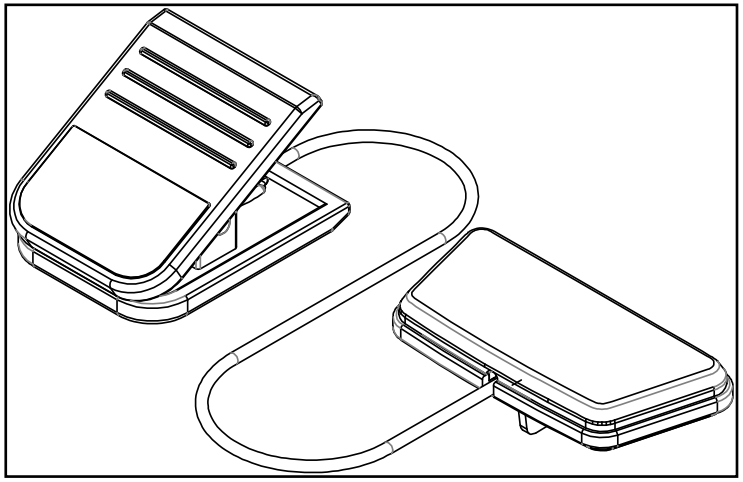

To Use:

1. Place the magnet into position on the round metal portion of the console control head. Your unit will not start and operate without this. Removing the magnet also secures the unit from unauthorized use.
2. Fasten the plastic clip onto your clothing securely to ensure good holding power. Note: The magnet has strong enough power to minimize accidental, unexpected stopping. The clip should be attached securely to make certain it does not come off. Be familiar with its function and limitations. The unit will stop, depending on speed, with a one to two step coast anytime the magnet is pulled off the console. Use the Stop / Pause switch in normal operation.

ABOUT YOUR MACHINE

Always use care and caution when operating your machine. Follow instruction in this manual to ensure safe operation and maintenance of your Hiker Treadmill

Be sure to follow XTERRA Fitness on your favorite social media platforms to view and share the latest fitness videos, images, and news.

facebook.com/XterraFitness

www.instagram.com/XterraFitness

youtube.com/user/XterraFitnessOnline

CONSOLE SCREEN - OVERVIEW

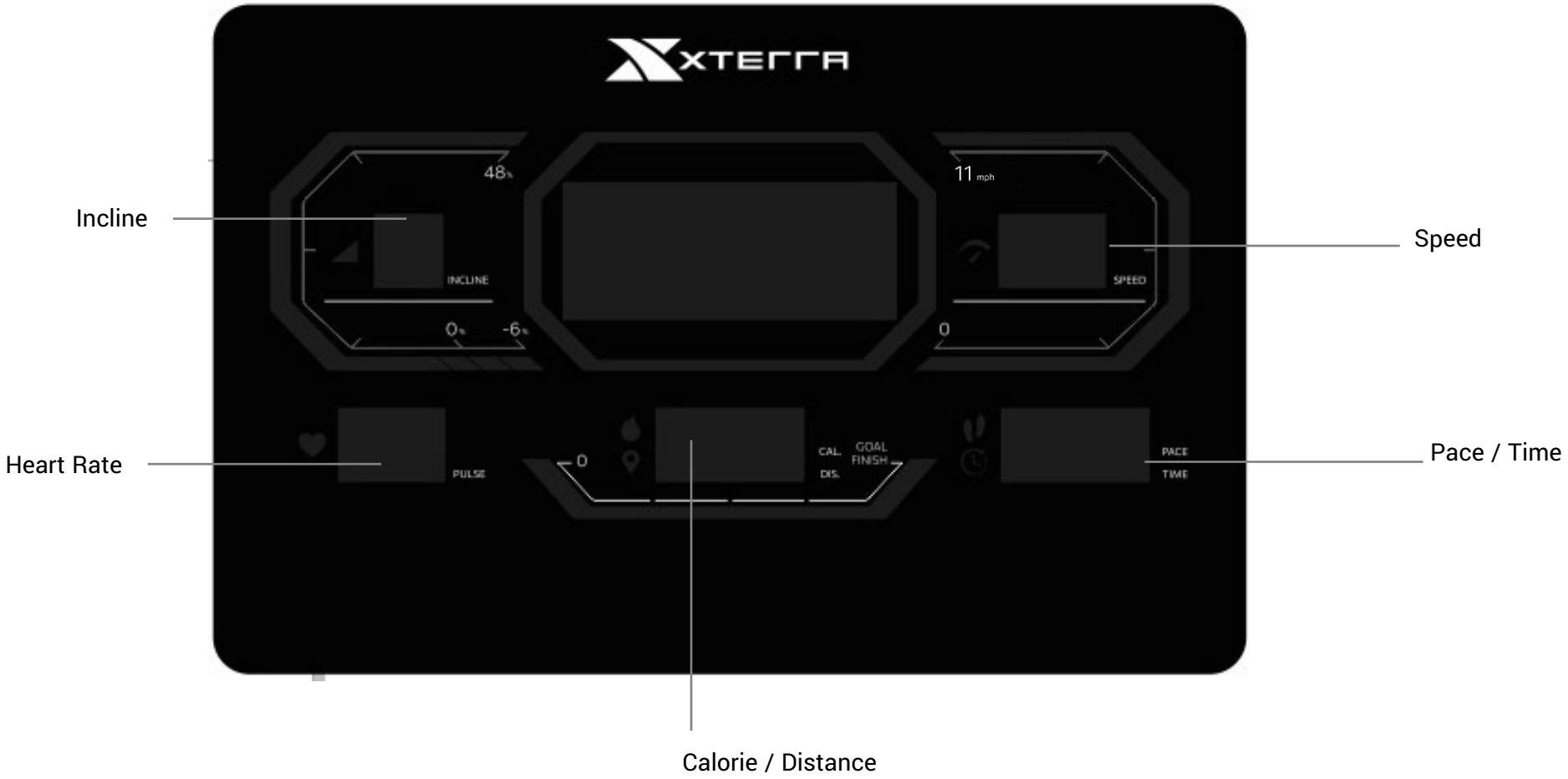

CONSOLE FEATURES

Holding Heartbeat

When both hands are gripping the heart rate hand grips during exercise or in a paused state, the system can automatically detect the exerciser's heart rate.

Bluetooth Heartbeat

When the athlete wears the bluetooth heart rate chest strap* (not included) correctly, it can automatically detect the athlete's heart rate during exercise and rest.

Xterra Bluetooth (Bluetooth Name: TR85H)

1. Used for Over the Air program updates
2. Used to connect to Xterra XF Connect App, Kinomap app, Zwift app.

Wireless charging function

After powering on, devices with wireless charging capabilities can be placed on the wireless charging base for charging. Charging will be disconnected if no contact is made.

INITIAL SPECIFICATION

POWER ON

When POWER ON, a long beep will sound during the first boot screen, and all relevant graphics will be displayed in the window for 2 seconds. After 2 seconds, it will enter IDLE MODE.
Standby mode

- In standby mode, the lights illuminate counter-clockwise, starting from the center of the bottom of the racetrack, and then cycle through the lights in sequence.
- In standby mode, each window displays the following by default:

  The TIME window displays '0:00' and its icon is lit; the INCLINE window displays '0' and its icon is lit; the PULSE window displays 'P' and its icon is lit; the DIS. window displays '0.0' and its icon is lit; the SPEED window displays '0.0' and its icon is lit; and the DM window displays ' GO '.

Power saving mode

- In Idle MODE, the device enters sleep mode after 10 minutes of inactivity; it will wake up by pressing any button or resetting the security key after entering sleep mode.

Sports Mode

- In standby mode, a short beep will sound every second, and the DM window will display "3-2-1" indicating the start of the power meter.
- In manual mode and target countdown mode, the DM window flashes "GO". The running lap is incremented by 10 meters per increment, with a full lap being 400 meters.
- In P mode and USER mode, the motion DM window displays the speed and incline profile. Press the DISPLAY button to switch profiles. 1.5MPH (2.5 kph) speed corresponds to one increment, and 6 incline levels correspond to one increment.
- The running track is set at 10 meters per section, with the total length of the track being 400 meters.

INITIAL SPECIFICATION - CONTINUED

Pause mode:

- If the “PAUSE” key is pressed during a workout, the distance, calorie, and time values remain at the levels recorded prior to pausing; the “Speed” display reflects the actual deceleration until the speed reaches 0.0, while the incline remains unchanged at its current setting, and the DM window displays “PAUSE.” Pressing the “START” key resumes the workout, with speed and incline continuing at the values active before the pause.

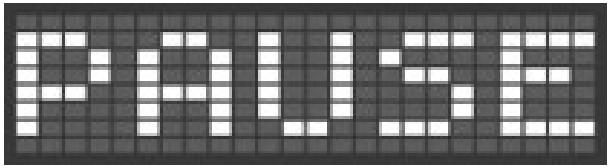

- If there is no activity on the PAUSE MODE page for 5 minutes, it will enter IDLE MODE.
- Pressing the START button has no effect if the speed has not returned to 0 during a pause in the movement.
- If the “START” is pressed while in pause mode, the DM window displays “3 2 1” with a short beep every second, and operation resumes using the data from before the pause. Press the “STOP” button during the workout to end the session and return to the standby screen.

Incline returning to “FLAT” - IMPORTANT

- If and when the “safety Key “ is removed or the workout is stopped the incline level will remain at the same level. (This means it will not automatically return to zero.) When the safety key is re inserted and the workout restarted, the incline will first return to zero by default.

KEY FUNCTION

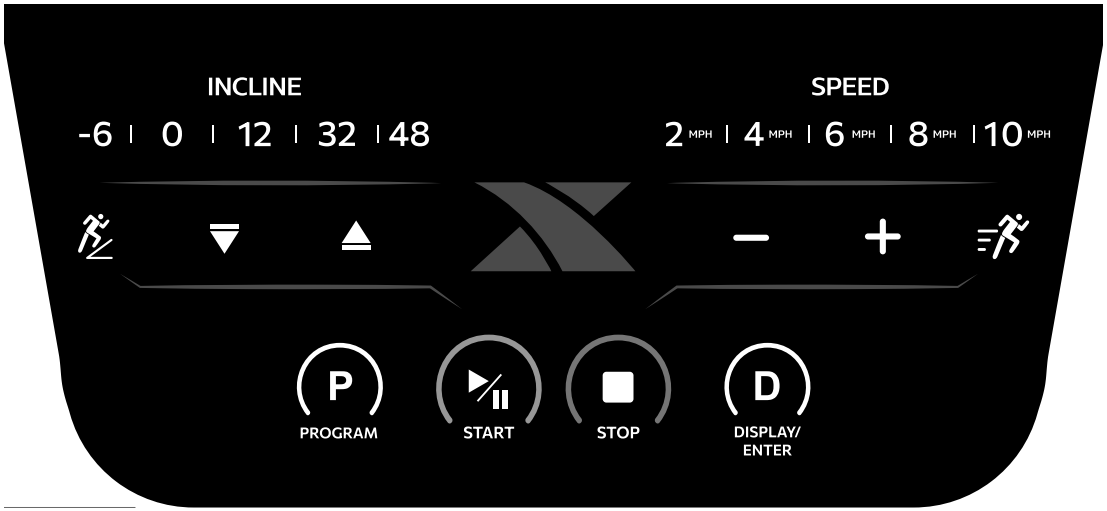

Keypad Tones

1. Pressing any valid key will produce a sound.
2. A long beep will be emitted when the parameter adjustment made by pressing the button exceeds the set range.
3. There is no key sound when the invalid key is pressed.

START/PAUSE button

1. Press the START button to start the program and begin accumulating the counter value .
2. If the program is in the setup process, press the START button and acknowledge the settings to start the electric treadmill .
3. Press the START button to begin the program. A short beep will sound every second, and the DM will display "3 2 1" indicating the start of the electric timer . After the electric timer starts, each window will begin counting .
4. START button while setting parameters , the program will accept the settings and begin execution.
5. During a workout, press this key to enter PAUSE MODE; the distance, calorie, and time values are retained at their pre-pause levels, and the incline remains unchanged at the current setting. The “SPEED” display slows down—reflecting actual speed changes—until it reaches 0.0, while the DM window displays “PAUSE”.
6. If the START button is pressed again while in the paused state, operation resumes at the speed and incline levels active prior to the pause, while all other functions continue to accumulate their respective values.

STOP button

7. If the STOP key is pressed during exercise or while in PAUSE MODE, the machine will terminate the workout and enter IDLE MODE, the incline level will remain unchanged.
8. When selecting the mode using the P key and MODE key, or when using the FAT mode and F5 to access the score page, pressing the STOP key will directly return you to standby mode.

KEY FUNCTIONS - CONTINUED

DISPLAY/ENTER

1. DISPLAY: Press during motion to switch speed PROFILE and display motion data in the window.
2. ENTER: After selecting a fixed program, press ENTER to confirm the program ; press ENTER to confirm motion parameter values; press this key to confirm engineering mode switching settings.
3. In FAT body fat measurement mode, pressing the ENTER key allows you to cycle through the user's "gender," "age," "height," and "weight." During selection, you can use the speed and boost/ decrease keys to set the corresponding countdown values.

PROGRAM button

1. In IDLE MODE cycles through the programs (Manual Mode, P01- P15 , U01-U03, HP1-HP3, FAT). While selecting a mode, the corresponding mode name is simultaneously displayed in the DM window. Alternatively, pressing the STOP button returns to IDLE MODE without making a selection .
2. The target selection mode, pressing the P key will select the P mode.

SPEED + and - keys x2

1. The SPEED- button during exercise will decrease the treadmill speed, while pressing the SPEED+ button will increase the treadmill speed. The adjustment increment is 0.1 kPH/MPH. When the button is held down for more than 1 second, it will automatically increase or decrease the speed continuously, accompanied by a button sound.
2. This key can be used to set relevant values in the parameter settings
3. Another pair of speed + and - buttons are located on the armrest.

INCLINE + and - keys x2

1. The INCLINE- button during exercise will decrease the treadmill's incline, while pressing the INCLINE+ button will increase it. The adjustment increment is 1 level and when held down for more than 1 second, it will automatically increase or decrease continuously, accompanied by a button sound .
2. This key can be used to set relevant values in the parameter settings; Another pair of INCLINE + and - buttons are located on the armrest.

SPEED shortcut key

"2, 4, 6, 8, 10" are speed shortcut keys, which can be used to quickly set the speed.

INCLINE shortcut key

-6, 0, 12, 32, 48 are the incline shortcut keys, which can quickly perform incline settings.

Safety lock:

1. Removing the safety key must trigger an emergency stop of the treadmill, regardless of the current operating state. Upon emergency stop, the incline function ceases, the buzzer emits three beeps (“BIBIBI”), the data display shows “---”, and the DM window displays “SF”; the error indication persists even after powering off and restarting.
2. When the safety key is detached, the treadmill cannot perform any operations other than powering off. Once the safety key is correctly reattached, the error message disappears, the console display lights up fully, the buzzer emits a long beep, and the treadmill returns to standby mode, awaiting further commands.

PROGRAMS

Quick Mode

1. In standby mode , press the "START" button to enter fast mode and start exercising. The DM window will display "3-2-1". The buzzer will sound once for each countdown , starting the treadmill. The time will start counting up from "0:00" at the corrected minimum speed and minimum incline , and the count will begin to accumulate. Other windows will also start counting up from zero .
2. Press the SPEED / INCLINE "+" and "-" keys to change the current segment and the non-executed segment. You can also press the SPEED / INCLINE shortcut key to quickly set the corresponding value. The window display switches every 5 seconds during the movement. When the window value is displayed, the corresponding icon is lit.

   "CAL."/"DIS." window: Current exercise calories and distance. Calories are displayed in the range of 0.0-999 , and distance is displayed in the range of 0.0-99.9 . Overflow will reset to zero and recalculate.
   "PACE"/"TIME" window: Current workout pace and duration, pace display range: 0:00–99:59. time display range: 0:00–99:59 (minutes:seconds); values reset to zero and restart upon exceeding the maximum limit.
   "SPEED" window: Current speed of motion: Display range 1.0-18.0 KMH/0.6-11.0 MPH .
   "INCLINE" window: Current slope of motion: Display range -6%-48%;

3. The "PULSE" window displays the current heart rate and illuminates the "PULSE" icon when a heart rate is detected; it displays "P" and illuminates the "PULSE" icon when no heart rate is detected. DM window: flashing "GO"
   The running track: each lap is 0.4km/0.25mile; the lights start from the middle of the bottom of the running track and turn counterclockwise, cycling every lap.

Speed limit rules:

4. When incline level is at -3 to 12, there is no speed limit.
   When the incline level is between -4 and -6, the maximum speed will not exceed 9.5 MPH (15 km/h).
   When the incline level is 13-18, the maximum speed does not exceed 9.5 MPH (15 km/h).
   When the incline level reaches 19-24, the maximum speed does not exceed 6 MPH (10 km/h).
   When the incline level is 25-30, the maximum speed does not exceed 4 MPH (6km/h).
   When the incline level is between 31 and 48, the maximum speed does not exceed 2.5 MPH (4 km/h).
5. If the "PAUSE" key is pressed during a workout, the distance, calorie, and time values remain at the levels recorded prior to pausing; the "Speed" display reflects the actual deceleration until the speed reaches 0.0, while the incline remains unchanged at its current setting, and the DM window displays "PAUSE." Pressing the "START" key resumes the workout, with speed and incline continuing at the values active before the pause.

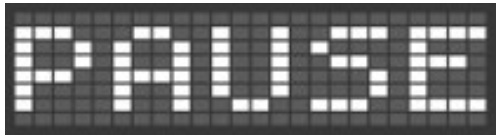

6. If there is an adjustment or elevation during the movement, when the elevation returns to zero during the pause movement, the DM window will display "In the descent" and then display "PAUSE" again.
7. To end the workout, press the "STOP" key while the treadmill is running or paused; the incline will not return to zero, and the running belt will stop. Upon stopping, the system returns to standby mode, and all data is reset to zero. Manually ending the workout returns the machine directly to standby mode without displaying "END" (the "END" status appears only when a countdown workout concludes).

PROGRAMS - TARGET PROGRAM

1. There are three target countdown modes. Press the “PROGRAM” key while in standby mode to enter the time countdown mode; the DM window will scroll the text “TIME,” the “TIME” window will flash “30:00” (minutes:seconds) once per second, and the time icon will light up. You can set the workout duration using the speed/incline “+/-” keys in 1-minute increments, with a setting range of “5:00” to “99:00.” When setting countdowns for time, distance, or calories, the DM window will scroll the corresponding text.

2. While in Time Countdown mode, press the “PROGRAM” key to enter Distance Countdown mode; the DM window scrolls the text “DISTANCE,” the “Distance” window flashes “1.0” once per second, and the distance icon lights up. Press the Speed/Incline “+/-” keys to set the workout distance in increments of 0.1; the setting range is 0.5–99.9.

3. While in the distance countdown mode, press the “PROGRAM” key to enter the calorie countdown mode; the dot-matrix window scrolls “CALORIES,” the “Calories” window flashes “50.0” once per second, and the calorie icon lights up. Press the speed/incline “+/-” keys to set the calorie value (adjustable in increments of 1.0); the setting range is 10.0–999.

4. After selecting one of the three countdown modes and setting it, press the START button. The "3 2 1" countdown will be displayed in the DM window and the exercise will begin .

5. During the movement, press the speed/incline "+" and "-" keys to change the current segment and the unexecuted segment. You can also press the speed/incline shortcut keys to quickly set the corresponding values. The window display switches every 5 seconds during the movement. When the window value is displayed, the corresponding icon is lit.

CALORIES window displays the current calories for the exercise when counting forward , with a range of 0.0-999 . It resets to zero and recalculates when overflowing. When counting backward, it displays the current remaining target value. The exercise ends when the calories count reaches 0.
DISTANCE window displays the current distance traveled when counting forward , from 0.0 to 99.9 , and resets to zero when overflowing; when counting backward, it displays the remaining target value, and the movement ends when the distance reaches 0.0.

TIME window displays the current movement time when counting forward, with a time range of 0 :00-99:59 (minutes:seconds) . It resets to zero and recalculates when overflowing . When counting backward, it displays the current remaining target value. The movement ends when the time counts down to 0:00.

PACE window displays the current exercise pace, with a display range of 0:00–99:59.

SPEED window displays the current speed of motion : display range 1.0-18.0 KMH/0.6-11.0 MPH .
INCLINE window: Current slope of motion: Display range -6%-48%

The **PULSE** window displays the current heart rate and illuminates the “PULSE” icon when a heart rate is detected; it displays “P” and illuminates the “PULSE” icon when no heart rate is detected.
DM window: Flashes "GO".

PROGRAMS - TARGET PROGRAM - CONTINUED

6. The running track: each lap is 0.4km/0.25mile; the lights start from the middle of the bottom of the running track and turn counterclockwise, cycling every lap.

7. Speed limit rules:
   When incline level is at -3 to 12, there is no speed limit.
   When the incline level is between -4 and -6, the maximum speed will not exceed 9.5 MPH (15 km/h).
   When the incline level is 13-18, the maximum speed does not exceed 9.5 MPH (15 km/h).
   When the incline level reaches 19-24, the maximum speed does not exceed 6 MPH (10 km/h).
   When the incline level is 25-30, the maximum speed does not exceed 4 MPH (6km/h).
   When the incline level is between 31 and 48, the maximum speed does not exceed 2.5 MPH (4 km/h).

8. If the “STOP” key is pressed during a workout, the distance, calorie, and time values are held at their pre-pause levels; the “Speed” display reflects the actual deceleration until the speed reaches 0.0; the incline remains unchanged; and the DM window displays “PAUSE.” Pressing the “START” key resumes the workout, with the speed starting at the calibrated minimum level.

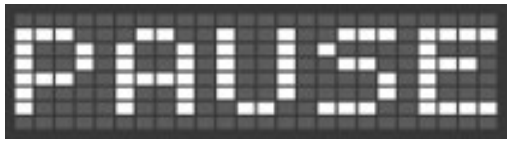

9. If the elevation is adjusted during movement, the elevation value is not reset to zero when the movement is paused; the DM window displays “PAUSE”.

10. Press the “STOP” key during a workout or while paused to end the session; the incline will not return to zero, and the running belt will stop. Upon stopping, the machine returns to standby mode, and all data is reset to zero.

11. When the target value counts down to zero, the speed display slows to a halt while showing the actual speed changes, accompanied by a beep every second; once the speed drops to 0.0, the display shows “END,” the incline remains at the current level without moving, and the system returns to standby mode after 5 seconds.

PROGRAMS - PROGRAM MODE

1. In standby mode, press the " Program " key to select "P01 (p01~p15)" mode, and the CAL window will display "P01~P15".
   " TIME " window flashes [30:00], the time icon is lit, and the setting range is: 5:00 - 99:00 (minutes :seconds) . The DM window displays the speed PROFILE. After setting the required exercise time by pressing " SPEED + , - " and " INCLINE +, -" , the setting is done in 1-minute units. When you press the " START " button to start the built-in program, the built-in program is divided into 16 segments, and the exercise time of each segment = set time / 16.

2. The program starts executing, and "3-2-1" is displayed in the DM window. The buzzer sounds once for each countdown.

3. Sounds once when entering the next segment . The system's speed / incline changes with the program segment. During this time, you can press the " SPEED + / - " and " INCLINE + / -" keys to change the speed /incline , or use the speed/incline shortcut keys to quickly set the corresponding values. Only the profile of the segment changes; the profiles of the stationary and moving segments remain unchanged. The display window switches every 5 seconds during movement, or you can press the DISPLAY key to switch the display window. When the window value is displayed, the corresponding icon is illuminated.

- The **CAL** window displays the calories of the current exercise, ranging from 0.0 to 999. If it overflows, it resets to zero and recalculates.
- The **DIS** window displays the current distance traveled, with the count ranging from 0.0 to 99.9. If it overflows, it resets to zero and recalculates.
- The **TIME** window displays the remaining target time, and the exercise ends when the time counts down to 0.
- The **PACE** window displays the current exercise pace, with a display range of 0:00–99:59.
- The **SPEED** window displays the current speed of the movement: display range 1.0-18.0 KMH/0.6-11.0 MPH;
- The **INCLINE** window displays the current slope of the motion: display range -6 to 48; The "PULSE" window displays the current heart rate and illuminates the "PULSE" icon when a heart rate is detected; it displays "P" and illuminates the "PULSE" icon when no heart rate is detected.

4. DM Window: Displays the execution speed incline/decline PROFILE , switching between them every 5 seconds. When switching to the speed PROFILE, the speed window flashes synchronously; when switching to the incline/decline PROFILE, the incline/decline window flashes synchronously. Press the DISPLAY button during motion to switch between the incline/decline PROFILE and speed PROFILE displays .

5. Speed limit rules: For safety reasons the climber has a speed limiter fitted based on the incline level.

6. The chart below indicates speed and incline levels

Incline Level		Max Speed (MPH)
From	To	
-6	-4	9.5
-3	12	11
13	18	9.5
19	24	6
25	30	4
31	48	2.5

PROGRAMS - PROGRAM MODE - CONTINUED

7. If the “PAUSE” key is pressed during a workout, the distance, calorie, and time values remain at the levels recorded prior to pausing; the “Speed” display reflects the actual deceleration until the speed reaches 0.0, while the incline remains unchanged at its current level and the DM window displays “PAUSE.” Pressing the “START” key resumes the workout, with speed and incline continuing according to the program’s defined settings.

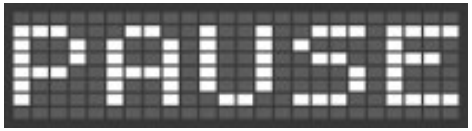

8. If there is an adjustment or incline/decline during the movement, when the incline/decline returns to zero during the pause movement, the DM window will display “In the descent” and then display “PAUSE” again.

9. In paused mode, press the “STOP“ button to stop running . When the DM window displays “In the descent” during the descent, it will return to standby mode and all data will be reset to zero.

10. When the target setting ramps down to zero, the speed display slows down and reflects the actual deceleration; a beep sounds every second. Once the speed reaches 0.0, the display shows “END,” the incline remains at its current level without moving, and the system returns to standby mode after 5 seconds.

PROGRAMS - USER MODE

1. There are 3 USER modes.
2. In IDLE MODE, press the "Program" key to select "U01-U03" mode. The CAL window will display " U01 " . Press the "Program" key again to select "U01-U03", and the DM window will display the corresponding graphic.
3. The TIME window flashes to display [30:00], the time icon lights up, press the speed/incline + and - keys to adjust the desired motion time, the setting range is: 5:00-99:00, press the "START" key to start the default program, the default program is divided into 16 segments, the motion time of each segment = set time/16.
4. Press ENTER to enter the settings page. The default display is the speed PROFILE, with the speed window value flashing. The first bar chart in the DM window also flashes. You can adjust the settings using the speed +/- keys, the manual speed +/- keys, or the speed shortcut keys. When setting the incline PROFILE, press the incline +/- keys, the manual incline +/- keys, or the incline shortcut keys to jump to the incline PROFILE. The incline window value will flash. After confirming each speed value, press ENTER to confirm and enter the next PROFILE setting. Repeat this process for all 16 segments, or you can press the START key to start the setting process.
5. After editing the settings, you can press the START button to start, press the STOP button to return to the previous level, or press the ENTER button to make changes again.
6. Press the START button, and the DM window will display '3 2 1' to start the exercise.
7. When entering the next segment, the buzzer sounds once. Press the incline/speed +/- keys or use the speed/incline increase/decrease keys to adjust the incline and speed. Only the profile of the current segment changes; the profiles of stationary and moving segments remain unchanged.
8. During exercise, the time, distance, calories, and speed windows will start counting:

- The **CAL**. window displays the calories of the current exercise, ranging from 0.0 to 999. If it overflows, it resets to zero and recalculates.
- The **DIS**. window displays the current distance traveled, with the count ranging from 0.0 to 99.9 . Overflow resets the count to zero and recalculates .
- The **TIME** window displays the remaining target time, and the exercise ends when the time counts down to 0.
- The **PACE** window displays the current exercise pace, with a display range of 0:00–99:59.
- The **SPEED** window displays the current speed of motion: display range 1.0-18.0 KMH/0.6-11.0 MPH .
- **INCLINE** window: Current slope of motion: Display range -6-48;
- The “**PULSE**” window displays the current heart rate and illuminates the “PULSE” icon when a heart rate is detected; it displays “P” and illuminates the “PULSE” icon when no heart rate is detected.

9. DM Window: Displays the execution speed PROFILE, switching between the window and the speed PROFILE every 5 seconds. When switching to the speed PROFILE, the speed window flashes synchronously; when switching to the PROFILE, the PROFILE window flashes synchronously. Press the Display button during motion to switch between the PROFILE and speed PROFILE displays.

PROGRAMS - USER MODE - CONTINUED

Speed limit rules: For safety reasons the climber has a speed limiter fitted based on the incline level.

Speed limit rules:

- When ascending to -3 to 12, there is no speed limit.
- When the altitude is between -4 and -6, the maximum speed will not exceed 9.5 MPH.
- When the elevation is 13-18, the maximum speed does not exceed 9.5 MPH.
- When the ascent reaches 19-24, the maximum speed does not exceed 6 MPH.
- When the altitude is 25-30, the maximum speed does not exceed 4 MPH.
- When the altitude is between 31 and 48, the maximum speed does not exceed 2.5 MPH.

10. If the “PAUSE” key is pressed during a workout, the distance, calorie, and time values remain at the levels recorded before pausing; the “Speed” display reflects the actual deceleration until the speed reaches 0.0, while the incline remains unchanged at its current level and the DM window displays “PAUSE.” Pressing the “START” key resumes the workout, with speed and incline continuing according to the established settings.

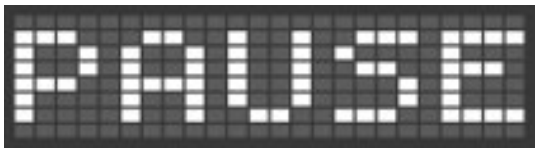

11. If there is an adjustment or incline during the movement, when the incline returns to zero during the pause movement, the DM window will display "In the descent" and then display "PAUSE" again.
12. In pause mode, press the "STOP" button to stop running. When the incline returns to zero, the DM window displays "In the descent" and then returns to standby mode, resetting all data to zero. Press the "START" button to continue running, and the speed and incline will continue at the set speed and incline.
13. When the target value counts down to zero, the speed display slows to a halt while showing the changing actual speed, accompanied by a beep every second. Once the speed drops to 0.0, the display shows “END”; the incline remains at its current level without changing, and the machine returns to standby mode after 5 seconds. In USER mode, once speed and incline settings have been configured and a workout has been performed, the settings are saved for the next session, though they can be reconfigured.

PROGRAMS - HRC MODE

1. There are three HRC models.
2. In IDLE MODE, press the "Program" key to select "HP1-HP3" mode. The CAL window will display "HP1-HP3", the DM window will display " HRC X " , the TIME window will flash "[30:00]", and the time icon will light up. Press the speed/incline + and - keys or hold the speed/incline + and - keys to adjust the desired motion time in 1-minute increments. The setting range is 5:00-99:00. Press the "START" key to start the program.
3. Press ENTER to modify the age. The DM will display " HRC AGE SET " and the DIS window will flash [30]. Press the speed/incline + and - keys to adjust the value. The setting range is 10-99. The heart rate window will display the target heart rate value for the corresponding age. After modification, press START to confirm and execute the program or press ENTER to jump to the next setting.
4. Press the ENTER key to modify the target heart rate value. The DM display will show " HRC THR SET " , and the heart rate window will flash to show the target heart rate value. Use the speed/incline + and - keys to adjust the value. The setting range is 100-220. You can press the START key at any time during the setting process.
5. After setting, press ENTER to confirm. The DM window will display “HRC X“. (X is a generic placeholder indicating that the specific value displayed is not fixed, for instance, HP1 scrolls to display HRC1, HP2 scrolls to display HRC2, and so on). The TIME window will display the set time, the DIS window will display the set age, and the PULSE window will display the set target heart rate.

- HP1's default heart rate is 114. The heart rate is calculated as [220 - age] * 60%. The default age is 30 years old. Note: The default heart rate changes with age.
- HP2's default heart rate is 133. The heart rate is calculated as [220 - age] * 70%. The default age is 30 years old. Note: The default heart rate changes with age.
- The default heart rate of HP3 is 152. The heart rate is calculated as [220 - age] * 80%. The default age is 30 years old. Note: The default heart rate changes with age.

6. Press the "START" button to start the program. The DM window displays a countdown of "3 2 1" and a short beep every second to start the program .
7. During movement, you cannot press SPEED+/- to adjust the speed using the speed shortcut keys. Instead, you can press INCLINE+/- to change the rise of the current segment and the unexecuted segment.

- The “CAL.” window displays the calories of the current exercise, ranging from 0.0 to 999. If it overflows, it resets to zero and recalculates.
- The “DIS.” window displays the current distance traveled, with the count ranging from 0.0 to 99.9 . Overflow resets the count to zero and recalculates .
- The “TIME” window displays the remaining target time, and the exercise ends when the time counts down to 0 .
- The “SPEED” window displays the current speed of the movement: display range 1.0-18.0 KMH/0.6-11.0 MPH;
- The“PACE”window displays the current exercise pace, with a display range of 0:00–99:59.
- “INCLINE” window: Current slope of motion: Display range -6%-48%;
- The “PULSE” window displays the current heart rate and illuminates

the “PULSE” icon when a heart rate is detected; it displays “P” and illuminates the “PULSE” icon when no heart rate is detected.

8. DM window: Flashing "GO" .
9. The running track: each lap is 0.4km/0.25mile; the lights start from the middle of the bottom of the running track and turn counterclockwise, cycling every lap.
10. Speed limit rules:
11. Speed limit rules: For safety reasons the climber has a speed limiter fitted based on the incline level.
12. The chart below indicates speed and incline levels

Incline Level		Max Speed (MPH)
From	To	
-6	-4	9.5
-3	12	11
13	18	9.5
19	24	6
25	30	4
31	48	2.5

13. HRC determination method
14. During exercise, the program execution is compared with the target heart rate value. If the target heart rate value (actual heart rate value < target heart rate value - 15) is not equal to the target heart rate value, the program will automatically increase by 0.5 kPa every 30 seconds until the speed reaches the maximum value, at which point the buzzer will sound two long beeps.
15. During exercise, the program execution compares the target heart rate value with the actual heart rate value. If the target heart rate value is 'target heart rate value - 15 ≤ actual heart rate value ≤ target heart rate value + 15', then the exercise speed remains unchanged.
16. During exercise, the program execution is compared with the target heart rate value. If the target heart rate value (actual heart rate value > target heart rate value + 15) is not equal, the heart rate will automatically decrease by 0.5 kPa every 30 seconds until the speed reaches the minimum value, at which point the buzzer will sound two long beeps.
17. HRC mode can still be activated even without a heartbeat signal. When there is no heart rate, the DM displays [?] . If there is still no heartbeat signal input within 30 seconds, the system will issue three "BiBi-Bi" prompts, and the treadmill will smoothly slow down and stop running. The speed will decrease in increments of 0.1 until it reaches 0.0, and then return to zero. After 5 seconds, it will enter standby mode.

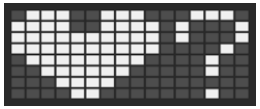

18. If the “PAUSE” key is pressed during a workout, the distance, calorie, and time values remain at the levels recorded before pausing; the

"Speed" window displays a gradual deceleration until the speed reaches 0.0; the incline remains at its current level without changing; and the DM window displays "PAUSE." Pressing the "START" key resumes the workout, with speed and incline continuing at their set levels.

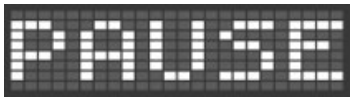

19. If the elevation is adjusted during movement, the elevation value is not reset to zero when the movement is paused; the DM window displays "PAUSE".

20. Press the "STOP" key during the workout or while paused to end the session; the incline will not reset to zero, and the running belt will stop. Upon stopping, the system returns to standby mode, and all data is reset to zero. When a target value counts down to zero, the speed slows to a halt while the display reflects the actual speed changes; a beep sounds every second. Once the speed drops to 0.0, the display shows "END," the incline remains at its current level without moving, and the system returns to standby mode after 5 seconds.

PROGRAMS - FAT

1. In IDLE MODE, press the "Program" key repeatedly to enter the Body Mass Index (FAT) detection function. The DM window will display FAT. Press the "ENTER" key to cycle through F-1, F-2, F-3, F-4, and F-5 (F-1 - Gender, F-2 - Age, F-3 - Height, F-4 - Weight, F-5 - Body Mass Detection).

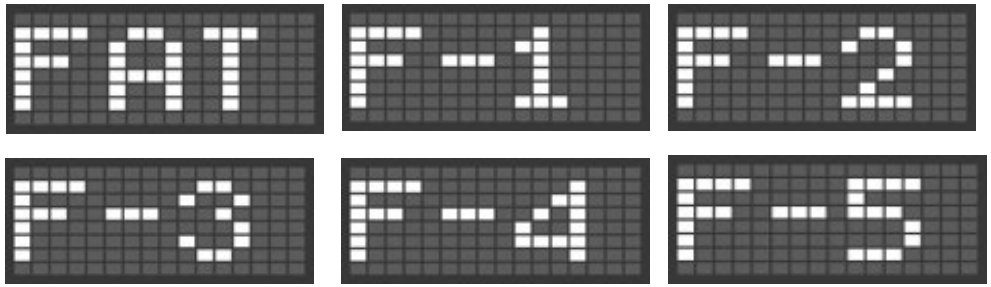

2. Select F (F1-F5), press ENTER to confirm, the DM window will display F-1 (F1-F5), and the TIME window will flash to display the corresponding default value. Press the incline or speed + and - keys to set the parameters of F1-F4. After setting, press "ENTER" to enter the F-5 body fitness test interface. At this time, hold the heart rate plate with both hands for 5 seconds and the window will display the corresponding body fat index.
3. In F-5 mode, the DM window displays F-5, and enters the score page after 1 second: when there is no heartbeat, the window displays "---", and when there is a heartbeat, the window displays the result.
4. On the score page, pressing the STOP button will directly return to IDLE MODE, and the score page will continue to be displayed without any operation.
5. Display and setting range of each parameter (Appendix 1)

Parameter categories	Default value	Set range	Remark
Gender (F1)	0 (Male)	0 — 1	0 = male 1 = female
Age (F2)	25 years old	10-99 years old	Default: 25
Height (F3)	170 CM / 6 8 in	100-200 cm, 40-86 inches	
Weight(F4)	70KG/15 4 lb	20-150 KG, 44-330 lb	

Body fat index comparison (Table 2)

Body Fat Index (Bmi)	Degree Of Obesity
Fat <19	Thin
19> Fat≤ 2 5	Normal
2 5>Fat≤29	Overweight
>30	Obesity

(This data is for reference only and should not be considered medical data.)

PROGRAMS - FAT - CONTINUED

5. Body Mass Index (FAT) measures the relationship between a person's height and weight, not body proportions. FAT is suitable for both men and women and, along with other health indicators, provides a range of values between 20 and 25. A FAT below 19 indicates underweight, between 25 and 29 indicates overweight, and above 30 provides a basis for weight adjustment. Ideal FAT is considered obese. (This data is for reference only and should not be considered medical data.)

6. Calculation formula:

When height is between 140 and 190 cm

FAT = Hundreds digit + {{ [(BMI/(1.6/HEIGHT)] + (AGE-18)*0.013) } * PULSE * SEX }

When height ≤ 140CM

FAT = Hundreds digit + {{ [(BMI/(1.4/HEIGHT)] + (AGE-18)*0.013) } * PULSE * SEX }

When height is ≥190CM

FAT = Hundreds digit + {{ [(BMI/(1.9/HEIGHT)] + (AGE-18)*0.013) } * PULSE * SEX }

For the hundreds digit (take the last heartbeat value), if the heartbeat value has no hundreds digit, substitute 0; if the heartbeat value has a hundreds digit, substitute the corresponding value.

The PULSE (last heartbeat value) is calculated by subtracting 0.95 for odd digits and 1.05 for even digits.

When SEX (gender) is 0 (male), its value is 1; when it is 1 (female), its value is 1.15.

BMI = WEIGHT (in kg) / (HEIGHT squared) (in meters).

Its calculation and display range is 5~50. If the body fat percentage is greater than 50, it will display 50; if the body fat percentage is less than 5, it will display 5.

FUNCTION DESCRIPTION

ODO (Total Time/Total Mileage):

1. The total time is calculated in minutes, with a calculation range of 0:00 to 99:59 (hours:minutes). If it exceeds 100 hours, it will automatically be rounded up to 100 (hours). It is calculated only in hours. When it exceeds 9999 (hours), it will be reset to zero and recalculated.
2. The total mileage calculation range is 0.0~999 KM/MILE , and any overflow will be reset to zero and recalculated.

SPEED:

- Displays the current speed value while in motion. Speed display range: 1.0 - 18.0 kH (metric) , 0.6 - 11.0 MPH (imperial). The speed is set in 0.1 increments and the, SPEED ICON must be illuminated for display.
- Maximum speed correction range: metric 16.0 ~ 24.0 KPH , default value is 18.0 KPH ; Imperial units are 9.9 ~ 15.0 MPH , default value is 11.0 MPH ;
- Minimum speed correction range: Metric 0.8 ~ 2.0 KMH , preset value 1.0 KMH ; Imperial 0.5 ~ 1.2 MPH , preset value 0.6 MPH ;
- In programs P1~P15, the speed starts at the program's designated speed; in other modes, press the "START" button to start, with an initial value of 1.0 kPH.
- When the speed reaches its minimum or maximum, press the SPEED+/ SPEED-key again and the buzzer will beep once.

PULSE (heart rate):

1. Can measure heart rate in both standby and running states. When the user holds the heart rate sensor handle with both hands, the system can automatically detect the user's heart rate and display it in the heart rate window.
2. In IDLE MODE, a heartbeat is displayed in the window when there is a heartbeat and the heart rate icon is lit up. When there is no heartbeat, 'P' is displayed and the 'PULSE' icon is lit up.

PACE (steps) / TIME (time):

1. The window display switches every 5 seconds during movement, or you can press the DISPLAY button to switch the display.
2. Pace display range: 0:00–99:59.
3. The display shows the motion time. When the time counts up from 0:00, the counting range is 0:00-99:59. If the time overflows, it resets to zero and recalculates. When the time counts down from the set time, the motion ends when the time reaches 0:00.
4. For TIME countdown, P01–P15, U01–U03, and HP1–HP3, the setting range is 5:00–99:00 (default: 30:00), adjustable in increments of 1.
5. When in standby mode, press the START button to start the treadmill. The time will be 0:00 (counting up).
6. The program runs in 16 segments. When counting up from 0:00, the segment transition time is 1 minute. When counting down, the segment transition time is the set time divided by 16. A buzzer sounds when entering the next segment.

FUNCTION DESCRIPTION - CONTINUED

DISTANCE

1. The display switches between the Calories window and the motion view every 5 seconds, or you can switch the display by pressing the Display button.
2. The distance is displayed during movement. When the distance is counted in the forward direction, the counting range is 0.0 to 99.9 . If it overflows , it resets to zero and recalculates. When the distance is counted in the reverse direction, it counts down from the set value to 0.0. The movement ends when the distance counts down to 0.0 during movement.
3. The DISTANCE GOAL setting range is 0.5 to 99.9, with a default value of 1.0, and is set in units of 0.1.
4. When the treadmill is started by pressing the START button in standby mode, the value will start from 0.0 and increase.
5. The “DISTANCE” window displays the distance traveled during movement, and the corresponding icon is lit up.

CALORIES:

1. During movement, the display switches between the DISTANCE window and the current display every 5 seconds, or you can switch the display by pressing the DISPLAY button.
2. The device displays the calories burned during exercise. When counting calories forward, the range is 0.0-999 , and it resets to zero upon overflow . When counting calories backward, it counts down from the set value to zero, and the exercise ends when it reaches 0.0.
3. CALORIES GOAL setting range: 10.0~999, with a default value of 50.0, set in units of 1.0.
4. In normal mode, simply press the START button to start the treadmill; the value will start from 0.0 and increase.
5. The “CAL” window displays the calorie consumption value of the athlete, and the corresponding icon is lit up.

WEIGHT:

The setting range is: Metric : 20 - 150 KG The default value is 70KG ; Imperial units : 44—330 lb The default value is 154 lb.

SEX (gender):

Male: 0 ; Female: 1. Default value is 0 .

HEIGHT:

The setting range is as follows:
Metric: 100-200 cm, default value: 170 cm;
Imperial: 40-86 inches, default value: 68 inches.

AGE:

The setting range is 10 to 99, and the default value for FAT mode is 25 years old.

Sound indication (BUZZER):

1. When you press the button, a beep will sound to confirm that the button has been pressed.
2. When the program starts executing: each of the steps '3-2-1' is accompanied by a short beep before it starts .

FUNCTION DESCRIPTION - CONTINUED

INCLINE:

1. Display range: -6 to 48.
2. The initial incline is 0 (segment 7) . During the movement, it rises or falls by one level each time it is adjusted.
3. The maximum incline correction is fixed at -6 to 48 degrees.
4. If the machine stops under any condition, the ascent will return to zero.

- Speed limit rules:
- When incline level is at -3 to 12, there is no speed limit.
- When the incline level is between -4 and -6, the maximum speed will not exceed 9.5 MPH (15 km/h).
- When the incline level is 13-18, the maximum speed does not exceed 9.5 MPH (15 km/h).
- When the incline level reaches 19-24, the maximum speed does not exceed 6 MPH (10 km/h).
- When the incline level is 25-30, the maximum speed does not exceed 4 MPH (6km/h)
- When the incline level is between 31 and 48, the maximum speed does not exceed 2.5 MPH (4 km/h).

ENGINEERING MODE

Engineering Mode 1

In standby mode, press and hold the START button, SPEED+ button, and safety button simultaneously for 3 seconds to enter calibration mode . The TIME window will display 'CAL'.

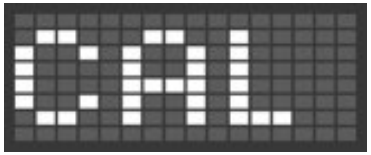

At this point, you can press the START button to directly correct the value read from the control panel. Once correction is complete , POWER ON will activate, entering standby mode. Alternatively, press the ENTER button to access the calibration parameter settings.

1. Upon entering the unit setting interface, the DM window displays 'UNIT' (default metric), and the TIME window flashes '0' to indicate metric . You can press the SPEED +/- keys or the INCLINE +/- keys to switch to '1' (indicating imperial).
2. Press ENTER to confirm and jump to the minimum speed setting. The DM window will display 'MIN SPD', and the SPEED window will flash to show the minimum speed ' 1.0 ' (default value 1.0). The value can be set to kPH (0.6 MPH) or 0.8-2.0 kph or 0.5-1.2 mph. Press the SPEED +/- key or the INCLINE +/- key to set the value.

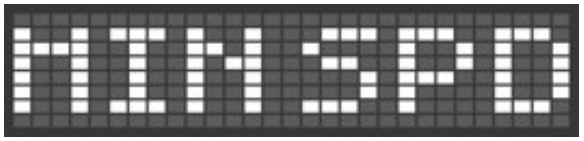

3. Press ENTER to confirm and jump to the maximum speed setting . 'MAX SPD' will be displayed in the DM window, and the maximum speed '18 .0' kph will flash in the SPEED window (default value 18.0 kph or 11.0 MPH) . The modification range is 16.0-24.0 kph or 9.9~15 mph. Press the SPEED +/- keys or the INCLINE +/- keys to set the value.

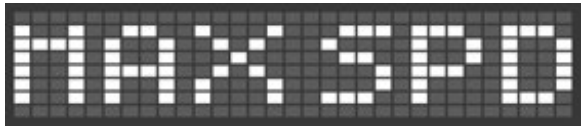

4. Press ENTER to confirm and jump to the ascension display. The DM window will display 'MIN INC', and the INCLINE window will display the minimum ascension '-6'.
5. Press ENTER to confirm and jump to the ascension display . The DM window will display 'MAX INC', and the INCLINE window will display the maximum ascension '48'.
6. Press ENTER to confirm and jump to the WHEEL SIZE setting. 'WHEEL SIZE' will be displayed continuously in the DM window, and the default WHEEL SIZE value '2.55' will flash in the SPEED window (the following value is the standard). Adjust the value in increments of 0.01, with a range of 1.50 to 4.00. Use the SPEED +/- keys or the INCLINE +/- keys to set the value.
7. Press ENTER to confirm and navigate to PULLEY. In the DIAMETER settings , 'PULLEY' will be displayed in the DM window , and the default value '100' (based on the control value) will be flashed in the SPEED window . The value can be modified from 10 to 500. Press the SPEED +/- key or the INCLINE +/- key to set the value.

ENGINEERING MODE - CONTINUED

8. Press ENTER to confirm and jump to the motor diameter setting. The DM window will display 'MOTOR ', and the SPEED RATE default value '34' will flash in the SPEED window (the following value is the standard) . The modification range is 5~200 . Press the SPEED +/- key or the INCLINE +/- key to set the value.
9. Press ENTER to confirm and jump to the Light Hole Count setting. 'POLLER' will be displayed in the DM window, and the default value '50' (based on the following control value) will be flashed in the SPEED window. The modification range is 5~100. Press the SPEED +/- key or the INCLINE +/- key to set the value.

After setting, press the START button to calibrate. The DM window will flash "CAL," and the calibrated AD value will be displayed in the TIME window. The watch will beep once upon completion and return to standby mode . Alternatively, press the safety button and then power on to enter standby mode without calibrating .

Press the STOP button during the setting process to return to the previous setting, until you return to IDLE MODE.

Engineering Mode 2

1. In standby mode, press and hold the START button, SPEED- button, and safety button simultaneously for 3 seconds to view the total time/mileage: the DIS window displays the total distance of exercise, and the TIME window displays the total time of exercise.
2. The DM window displays the model name and software version date: for example: AB02230-00T-02-260508V10. To clear total time and mileage (EEPROM): Press and hold the ENTER key. The total time and mileage will be cleared to zero. The TIME window will display '0:00' and the DIS window will display '0.0'. You can press and hold the STOP key for 3 seconds to exit.
3. To enter OTA mode: On the software version date display page, press and hold the INCLINE + key and the SPEED - key for 3 seconds to enter the OTA selection page: 'OTA ON' will be displayed in DM.
4. On the OTA selection page, use the speed boost plus/minus keys to select 'OTA OFF', and press ENTER to confirm to exit OTA mode and return to IDLE MODE.

- On the OTA selection page, use the speed boost up/down buttons to select 'OTA ON', and press ENTER to confirm and enter OTA mode. At this point, 'OTA' will be displayed in the DM window.
- Use "anplus-ota" for Android or "SUNRISE OTA" for iOS for over-the-air updates. After opening the app, tap "Start" to proceed to the next page and follow the on-screen instructions to update.
- Click "Scan Bluetooth", select the Bluetooth device and click to pair and connect. After successful connection, the DM window will display "BT". Once pairing is OK, proceed to the second step of loading the document. Click "Start Loading" and select the document to be burned. After successful loading, proceed to the third step of updating. Click "Start Update" and wait for the document to load.

ENGINEERING MODE - CONTINUED

- Once the page progress bar reaches 100%, the digital clock will restart, indicating a successful update.
- If you select 'OTA ON' and press ENTER to enter, the watch will still enter OTA mode after powering on if you do not perform operations such as connecting Bluetooth or updating the program. At this time, you can temporarily exit OTA by pressing and holding the security key. Then, on the version date page, press the INCLINE + button and the SPEED - button for 3 seconds to re-enter the OTA selection page. Select 'OTA OFF' and press ENTER to confirm, which will exit OTA mode and return to IDLE MODE.

Engineering Mode 3

1. In standby mode, press and hold "ENTER" and "STOP" simultaneously and reset the security key or POWER ON to enter. DM will display "EM".

2. Press ENTER to enter the submenu and select: 'KEY TEST' > 'DISPLAY TEST' > 'SLEEP MODE' > 'GS MODE'

3. During the process, use the speed boost +/- keys to change options, and press ENTER to enter the corresponding sub-mode. The form is as follows:

Menu	Sub-Menu
Key Test	
Display Test	
Sleep Mode	ON (Default) / OFF
GS Mode	ON / OFF (Default)

4. When the DM window displays 'KEY TEST' , press the ENTER key to enter. All windows will be displayed for 2 seconds before entering the key test . When a key is pressed, the corresponding key value will be displayed in the DM window until all keys have been pressed, after which it will automatically return to ' KEY TEST '. At this point, press STOP to return to IDLE MODE .

5. -6 key > (01); Incline 0 key > (02); Incline 12 key > (03); Incline 32 key > (04); Incline 48 key > (05); Speed 3 key > (06); Speed 6 key > (07); Speed 9 key > (08); Speed 12 key > (09); Speed 15 key > (10); Incline - key > (11); Incline + key > (12); Speed - key > (13); Speed + key > (14); P key > (15); Start/Pause key > (16); STOP key > (17); D key > (18); Hand-held Incline + key > (19); Hand-held Incline - key > (20); Hand-held Speed + key > (21); Hand-held Speed - key > (22).

ENGINEERING MODE - CONTINUED

6. When the DM window displays "DISPLAY TEST", press the ENTER key to enter. After 3 seconds of full display, all windows will light up sequentially. The test will automatically return to "DISPLAY TEST" upon completion.

7. When the DM window displays 'SLEEP MODE', press ENTER to enter the settings. The DM window will then display 'ON' (ON by default). Use the speed/incline increase/decrease buttons or the manual increase/decrease buttons to switch between ON and OFF. Press ENTER to save and return to 'SLEEP MODE'.

8. When SLEEP MODE is ON, the watch will enter sleep mode after 10 minutes of inactivity in IDLE MODE, and the LED display will turn off. Pressing the button, the security key, or the hand-held button will wake up the watch. When SLEEP MODE is OFF, the electronic watch will not go into sleep mode.

9. When the DM window displays "GS MODE", press the ENTER key to enter the settings. The DM window will flash to display "OFF" (default OFF). Use the speed/incline increase/decrease buttons or the manual increase/decrease buttons to switch between ON and OFF. Press the ENTER key to save and return to "GS MODE".

When OFF :

1. When switched to OFF, the incline immediately drops to the minimum calibration value.
2. On the IDLE MODE page, ascend to zero.
3. The exercise ends on the SUMMARY screen, and the ascension resets to zero.
4. After a power outage and restart, the incline returns to zero.
5. Engage the safety lock, return the object to zero, and then incline it back to zero.
6. During the ascent, regardless of whether the target position has been reached, pressing the pause button will reset the motor to zero. You must wait for the motor to return to zero before pressing the START button to resume the ascent and continue climbing to the target value.

When ON :

- When switched to ON, the incline maintains its current position.
- On the IDLE MODE page, ascend to keep the current position.
- The motion ends on the SUMMARY screen, and the ascent maintains the current position.
- After a power outage and restart, the ascent will maintain its current position.
- Engage the safety lock, and after returning to the original position, incline and maintain the current position.
- During the movement, regardless of whether the target position has been reached, press the pause button to keep the motor in the current position, and press the START button to resume the movement and continue climbing to the target value.
- In any submenu, you can press the STOP key to return to the previous level until you return to IDLE MODE.

BLUETOOTH APP

This device supports connection via Xterra XF Connect App, KINOMAP, and ZWIFT Apps. Users can download and install the APP on their mobile phones, and open the APP to connect with Bluetooth enabled on their phones.

1. Xterra XF Connect App

Register and log in to the XF Connect app on your mobile phone, tap the Bluetooth icon in the top-right corner, and locate the “TR85H” device under “Other Devices” to pair. Upon successful addition, the digital watch will emit a “beep” sound. You can then verify the connection under “My Devices” and tap “Display Data” to view the data synchronized from the watch.

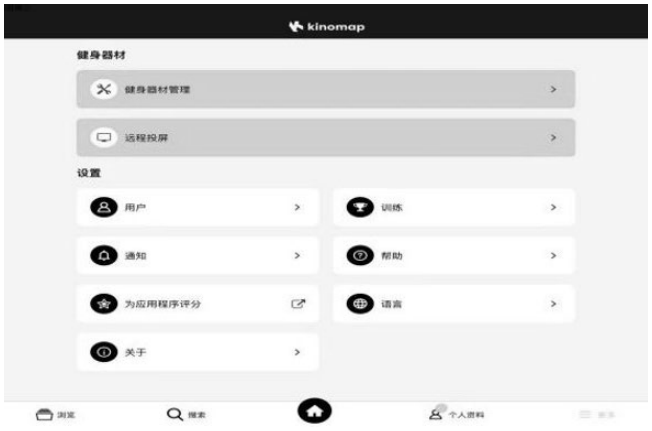

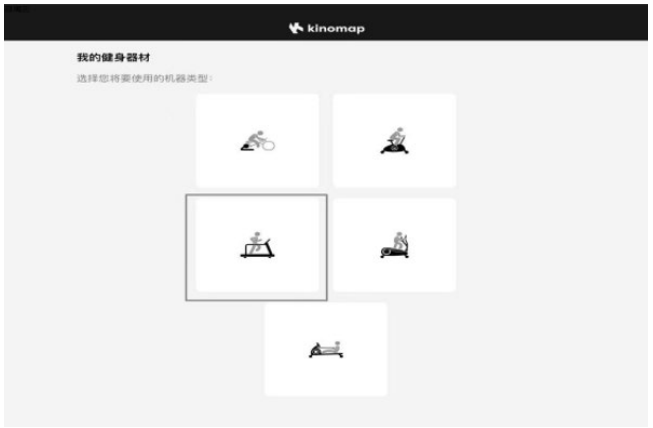

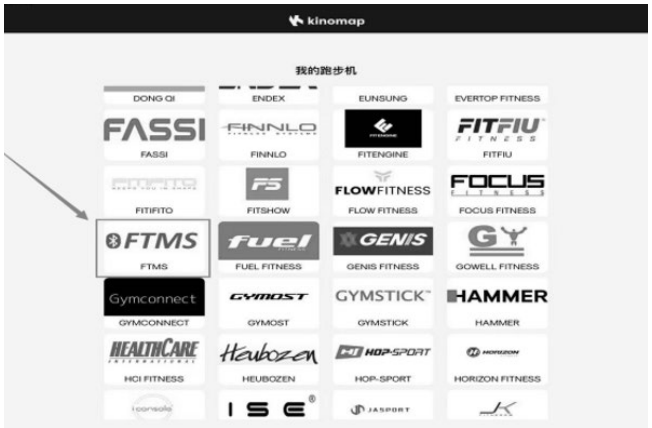





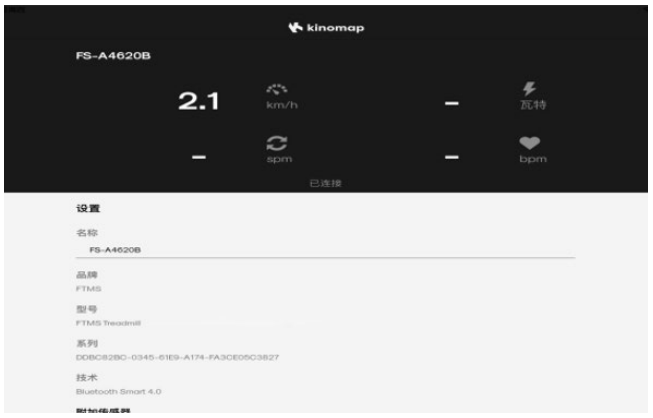

BLUETOOTH APP - CONTINUED

2. KINOMAP

Register and log in to the Kinomap app on your phone, navigate to the fitness equipment management section under “More,” and tap the “+” icon in the top-right corner to add new equipment. Select “My Treadmill” and the “FTMS” brand; on the “My Treadmill” screen, locate the FTMS protocol and follow the on-screen prompts. Select the “TR85H” Bluetooth device from the list of detected equipment to pair; upon successful addition, the console will emit a “beep” sound. You can then verify the successful connection within the app, where data will be displayed in sync with the console.

ZWIFT

Register and log in to the Zwift app on your mobile phone. On the device pairing screen, select the running speed option and tap to pair; then, on the search screen, select the “TR85H” Bluetooth device and press OK. Once connected, the console will emit a “beep,” and the running speed displayed on the app will synchronize with the console. Data synchronization with Zwift occurs once the console enters workout mode; when the console is not in workout mode, speed and heart rate readings will show as zero.

Note: Bluetooth can only connect to one app at a time. To connect to another app, you must first exit the app you are currently connecting to.

HEART RATE CHEST STRAP* (NOT INCLUDED)

1. Attach the transmitter to the elastic strap using the interlocking key.
2. Adjust the strap as tightly as possible as long as the strap is not too tight to remain comfortable.
3. Position the transmitter with the logo centered in the middle of your torso facing away from your chest (some people must position the transmitter slightly left of center). Attach the final end of the elastic strap by inserting the round end and, using the locking parts, secure the transmitter and strap around your chest.
4. Position the transmitter directly below the pectoral muscles.
5. Sweat is the best conductor to measure very minute heart beat electrical signals. However, plain water can also be used to pre-wet the electrodes (2 ribbed oval areas on the reverse side of the belt and both sides of the transmitter). It's also recommended that you wear the transmitter strap a few minutes before your work out. Some users, because of body chemistry, have a more difficult time in achieving a strong, steady signal at the beginning. After "warming up", this problem lessens.
6. Your workout must be within range - distance between transmitter/receiver – to achieve a strong steady signal. The length of range may vary somewhat but generally stay close enough to the console to maintain good, strong, reliable readings. Wearing the transmitter directly on bare skin assures you of proper operation. If you wish, you may wear the transmitter over a shirt. To do so, wet the areas of the shirt that the electrodes will rest upon.

Note: The transmitter is automatically activated when it detects activity from the user's heart. Additionally, it automatically deactivates when it does not receive any activity. Although the transmitter is water resistant, moisture can have the effect of creating false signals, so you should take precautions to completely dry the transmitter after use to prolong battery life (estimated transmitter battery life is 2500 hours). The replacement battery is Panasonic CR2032.

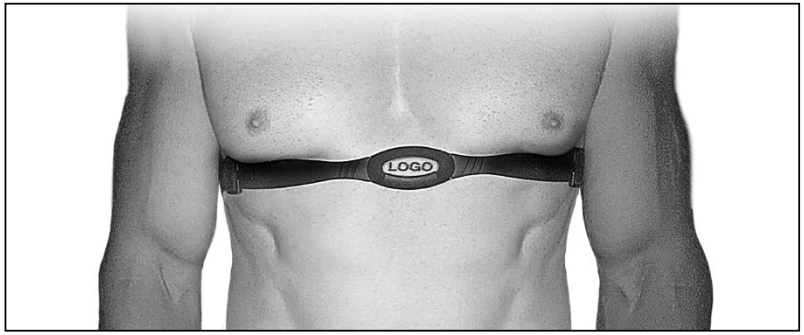

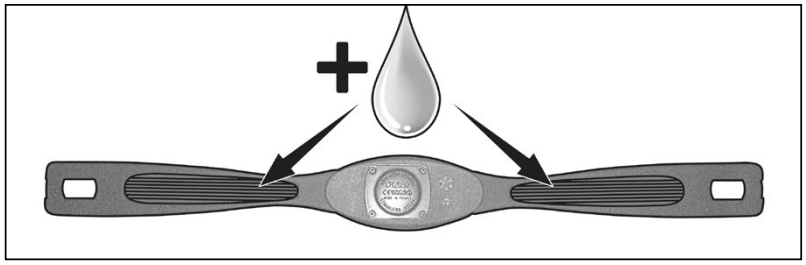

HEART RATE EXERTION

The old motto, “no pain, no gain”, is a myth that has been overpowered by the benefits of exercising comfortably. A great deal of this success has been promoted by the use of heart rate monitors. With the proper use of a heart rate monitor, many people find that their usual choice of exercise intensity was either too high or too low and exercise is much more enjoyable by maintaining their heart rate in the desired benefit range.

To determine the benefit range in which you wish to train, you must first determine your Maximum Heart Rate. This can be accomplished by using the following formula: 220 minus your age. This will give you the Maximum Heart Rate (MHR)for someone of your age. To determine the effective heart rate range for specific goals you simply calculate a percentage of your MHR. Your Heart rate training zone is 50% to 90% of your maximum heart rate. 60% of your MHR is the recommended for burning fat while 80% is recommended for strengthening the cardio vascular system. This 60% to 80% is the zone to stay in for maximum benefit.

For someone who is 40 years old their target heart rate zone is calculated:
220 – 40 = 180 (maximum heart rate)
180 x .6 = 108 beats per minute (60% of maximum)
180 X .8 = 144 beats per minute (80% of maximum)
So for a 40 year old the training zone would be 108 to 144 beats per minute.

If you enter your age during programming the console will perform this calculation automatically. Entering your age is used for the Heart Rate programs. After calculating your MHR you can decide upon which goal you would like to pursue.

The two most popular reasons for, or goals, of exercise are cardiovascular fitness (training for the heart and lungs) and weight control. If your goal is cardiovascular fitness or if it is weight loss, it can be achieved by training at 80% or 60%, respectively, of your MHR on a schedule approved by your physician. Consult your physician before participating in any exercise program.

With this Spirit Fitness unit you may use the heart rate monitor feature without using the Heart Rate program. However, when using the heart rate monitor feature in conjunction with the Heart Rate programs, the machine will automatically adjust speed or incline to maintain the desired heart rate.

HEART RATE - PERCEIVED EXERTION

Heart rate is important but listening to your body also has a lot of advantages. There are more variables involved in how hard you should workout than just heart rate. Your stress level, physical health, emotional health, temperature, humidity, the time of day, the last time you ate and what you ate all contribute to the intensity at which you should workout. If you listen to your body it will tell you all of these things.

The rate of perceived exertion (RPE), also known as the Borg scale, was developed by Swedish physiologist G.A.V. Borg.
This scale rates exercise intensity from 6 to 20 depending upon how you feel or the perception of your effort.
The scale is as follows:

Rating Perception of Effort

6	Minimal
7	Very, Very Light
8	Very, Very Light +
9	Very Light
10	Very Light +
11	Fairly Light
12	Comfortable
13	Somewhat Hard
14	Somewhat Hard +
15	Hard
16	Hard +
17	Very Hard
18	Very Hard +
19	Very, Very Hard
20	Maximal

You can get an approximate heart rate level for each rating by simply adding a zero to each rating. For example a rating of 12 will result in an approximate heart rate of 120 beats per minute. Your RPE will vary depending on the factors discussed earlier. If your body is strong and rested, you will feel strong and your pace will feel comfortable. When your body is in this condition, you are able to train harder and the RPE will support this. If you are feeling tired and sluggish, it is because your body needs a break. In this condition, your pace will feel difficult. Again, this will show up in your RPE and you will train at the proper level for that day.

PROGRAM INSTRUCTIONS

Prog / Time		Setting time / 16 = interval running time															
		1	2	3	4	5	6	7	8	9	10	11	12	13	14	15	16
P01	SPEED	1.2	1.8	1.8	2.5	2.5	3.1	3.1	1.8	2.5	3.1	2.5	2.5	1.8	1.8	3.1	1.8
	INCLINE	1	1	2	2	3	3	2	2	1	2	2	1	3	2	2	2
P02	SPEED	1.2	2.5	2.5	3.1	3.7	3.7	3.7	2.5	3.1	3.7	2.5	2.5	1.2	3.1	2.5	1.2
	INCLINE	1	2	2	2	3	2	2	2	2	2	3	3	4	3	2	2
P03	SPEED	1.2	2.5	2.5	3.7	4.3	4.3	4.3	2.5	4.3	4.3	2.5	2.5	2.5	3.1	1.8	1.2
	INCLINE	2	3	3	2	3	3	2	2	2	2	4	4	6	3	2	2
P04	SPEED	1.8	3.1	3.1	3.7	3.1	4.3	4.3	5	5	3.1	5.6	3.1	3.7	2.5	2.5	1.8
	INCLINE	2	3	3	2	3	3	2	2	2	2	4	4	6	3	2	2
P05	SPEED	1.2	2.5	2.5	3.1	4.3	3.1	3.7	4.3	5	5	3.1	2.5	3.7	3.1	2.5	1.2
	INCLINE	3	3	3	4	5	5	4	4	4	4	5	5	3	2	2	2
P06	SPEED	1.2	2.5	2.5	2.5	5.0	5.0	3.7	4.3	5.0	5.0	3.7	2.5	3.1	2.5	1.8	1.2
	INCLINE	3	5	5	5	4	3	3	3	3	4	4	4	3	4	3	2
P07	SPEED	1.2	1.8	1.8	1.8	1.8	2.5	3.1	1.8	2.5	3.1	1.8	1.8	3.7	3.1	1.8	1.8
	INCLINE	4	4	4	4	6	6	6	7	7	8	8	9	6	5	4	4
P08	SPEED	1.2	1.8	1.8	3.7	2.5	3.7	4.3	2.5	3.7	4.3	2.5	2.5	1.8	2.5	2.5	1.2
	INCLINE	4	5	5	5	6	7	8	9	9	9	10	10	12	8	6	3
P09	SPEED	1.2	2.5	2.5	4.3	4.3	5.0	2.5	5.0	5.6	5.6	2.5	2.5	3.7	1.8	1.8	1.2
	INCLINE	5	5	5	6	4	4	6	6	5	5	8	8	9	7	4	2
P10	SPEED	1.2	2.5	3.1	3.7	2.5	3.7	5.0	5.0	3.7	3.7	3.1	2.5	2.5	2.5	1.8	1.8
	INCLINE	5	6	6	6	8	8	4	4	4	5	5	8	10	8	6	3
P11	SPEED	1.2	3.1	5.0	6.2	6.2	6.2	4.3	4.3	6.2	6.2	3.1	3.1	3.1	3.1	2.5	1.8
	INCLINE	4	5	3	2	2	2	2	2	2	4	5	6	5	5	2	0
P12	SPEED	1.8	2.5	5.6	5.6	3.1	5.0	3.1	5.6	4.3	3.1	3.1	4.3	3.1	4.3	3.7	1.8
	INCLINE	1	2	3	2	5	0	0	2	3	5	7	3	6	5	3	3
P13	SPEED	1.8	3.7	4.3	3.1	4.3	3.1	3.1	4.3	5.6	3.1	5.0	3.1	5.6	5.6	2.5	1.8
	INCLINE	3	3	5	6	3	7	5	3	2	0	0	5	2	3	2	1
P14	SPEED	1.2	1.2	2.5	3.1	2.5	1.8	1.2	0.6	1.2	1.8	2.5	3.1	2.5	1.8	1.2	0.6
	INCLINE	4	4	4	4	6	6	6	7	7	8	8	9	6	5	4	4
P15	SPEED	1.2	2.5	3.7	5.0	2.5	2.5	1.2	1.2	1.2	2.5	3.7	5.0	2.5	2.5	1.2	1.2
	INCLINE	3	3	3	4	5	5	4	4	4	4	5	5	3	2	2	2

SPEED AND INCLINE LEVELS

Incline Level	Max Speed (Kph)	Max Speed (MPH)
-6	15	9.5
-5	15	9.5
-4	15	9.5
-3	18	11
-2	18	11
-1	18	11
0	18	11
1	18	11
2	18	11
3	18	11
4	18	11
5	18	11
6	18	11
7	18	11
8	18	11
9	18	11
10	18	11
11	18	11
12	18	11
13	15	9.5
14	15	9.5
15	15	9.5
16	15	9.5
17	15	9.5
18	15	9.5
19	10	6
20	10	6
21	10	6
22	10	6
23	10	6
24	10	6
25	6	4
26	6	4
27	6	4
28	6	4
29	6	4
30	6	4
31	4	2.5
32	4	2.5
33	4	2.5
34	4	2.5
35	4	2.5
36	4	2.5
37	4	2.5
38	4	2.5
39	4	2.5
40	4	2.5
41	4	2.5
42	4	2.5
43	4	2.5
44	4	2.5
45	4	2.5
46	4	2.5
47	4	2.5
48	4	2.5

MAINTENANCE & CARE

Post-Workout Machine Care

1. Use a slightly damp cloth to clean areas where sweat or oil made contact with the machine.
2. Use a microfiber cloth to clean the display and remove unwanted oils and other things that may damage the screen.
3. Avoid leaving paper or other small debris in the cupholders.

General Cleaning

Dirt, dust, and hair can block air inlets and accumulate on the running belt. Please vacuum underneath your unit on a monthly basis to prevent excess build-up of dirt that can get sucked up and get into the inner workings under the motor cover. Every other month, you should remove the motor cover and carefully vacuum out dirt and hair that may accumulate.

UNPLUG THE POWER CORD BEFORE THIS TASK.

Sanitizing Your XTERRA Fitness Equipment

- Unupholstered high-contact surfaces (hard plastics) can be sanitized using a 75% isopropyl alcohol solution and a clean, dry cloth. Spray surfaces to be sanitized, and use the dry cloth to wipe clean. Allow surfaces to dry before using.
- For upholstered or soft-plastic surfaces, use a conditioner after sanitizing. Be sure to follow the instructions provided by the conditioner manufacturer to ensure proper use of the conditioner.
- Alternatively, you can make your own spray by mixing the proper ratio of isopropyl alcohol and distilled water to reach a 75% solution.

Warning: Always unplug the treadmill from the electrical outlet before removing the motor cover. At least once a year remove the motor cover and vacuum under the motor cover.

Aligning the Running Belt

We recommend turning the power off for 10 minutes after running for 2 hours to maintain the treadmill.

To avoid slipping during running, the belt must not be too loose. To avoid excess abrasion between the roller and belt and to maintain optimal running conditions, the belt must not be too tight. You can adjust the distance between the plates and belt. The belt should be away from the plates about 50-75 mm on both sides.

1. Place treadmill on a level surface. Run Treadmill at approximately 6-8KM/H, checking the running condition. If the belt has drifted to the right, pull out of the safety key and switch, turn the right adjusting bolt 1/4 turn clockwise, then start running until centering the belt. (A)
2. If the belt has drifted to the left, pull out of the safety key and switch, turn the left adjusting bolt 1/4 turn clockwise, then start running until centering the belt. (B)
3. With use, over time, the belt can become loose. Pull out of the safety key and switch, turn the left and right adjusting bolt 1/4 turn clockwise, then start running to confirm that the belt tightness is correct. Adjust as needed. (C)

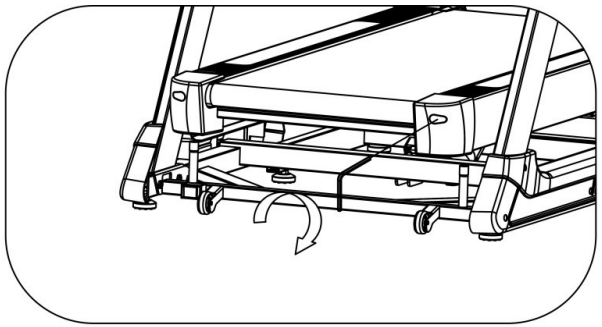

A

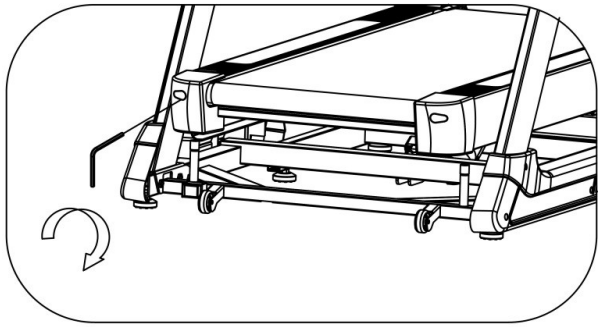

B

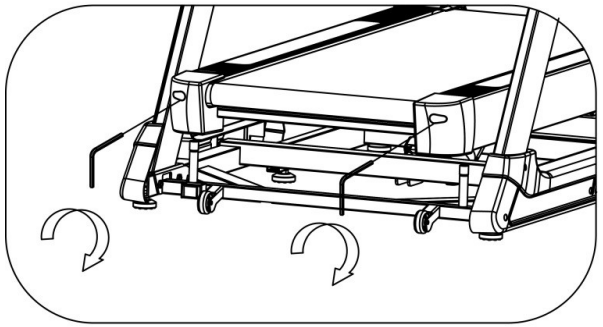

C

DO NOT OVERTIGHTEN – Over tightening will cause belt damage and premature bearing failure. If you tighten the belt a lot and it still slips, the problem could actually be the drive belt - located under the motor cover - that connects the motor to the front roller. If that belt is loose it feels similar to the walking belt being loose. Tightening the motor belt should be done by a trained service person.

RUNNING DECK LUBRICATION

This treadmill is equipped with a pre-lubricated, low maintenance deck system. The belt/ deck friction may play a major role in the function and life of your treadmill, thus requiring periodic lubrication. We recommend a periodic inspection of the deck. Contact our service center if you find damage to the deck.

We recommend that you lubricate the deck according to the following timetable:

- Light user (less than 3 hours/ week) annually
- Medium user (3-5 hours/ week) every six months
- Heavy user (more than 5 hours/ week) every three months

We recommend that you buy the lubrication from our distributor or directly from our company

Attention: Any repair should be performed by a professional technician.

BELT AND DECK CLEANING

Cleaning and Inspecting the Running Belt

1. Turn off power and unplug from electrical outlet.
2. Carefully position the treadmill on its side.
3. Use a damp cloth to wipe off the inside of the running belt. Carefully rotate the running belt by hand to clean the entire inside face. Return treadmill to its upright Position.
4. If running belt edges are frayed, check the running belt adjustment.
5. If seams are splitting, call your retailer or nearest authorized service center.

Cleaning

1. Firstly, make sure the treadmill is off and unplugged from the electrical outlet .
2. To remove dust, use a small vacuum nozzle to carefully vacuum around all visible components .
3. To remove film or dust, use a slightly damp rag with a mild cleaning agent sprayed onto the rag only .
4. Be careful not to immerse any treadmill component with any liquids .

EXPLODED VIEW DIAGRAM

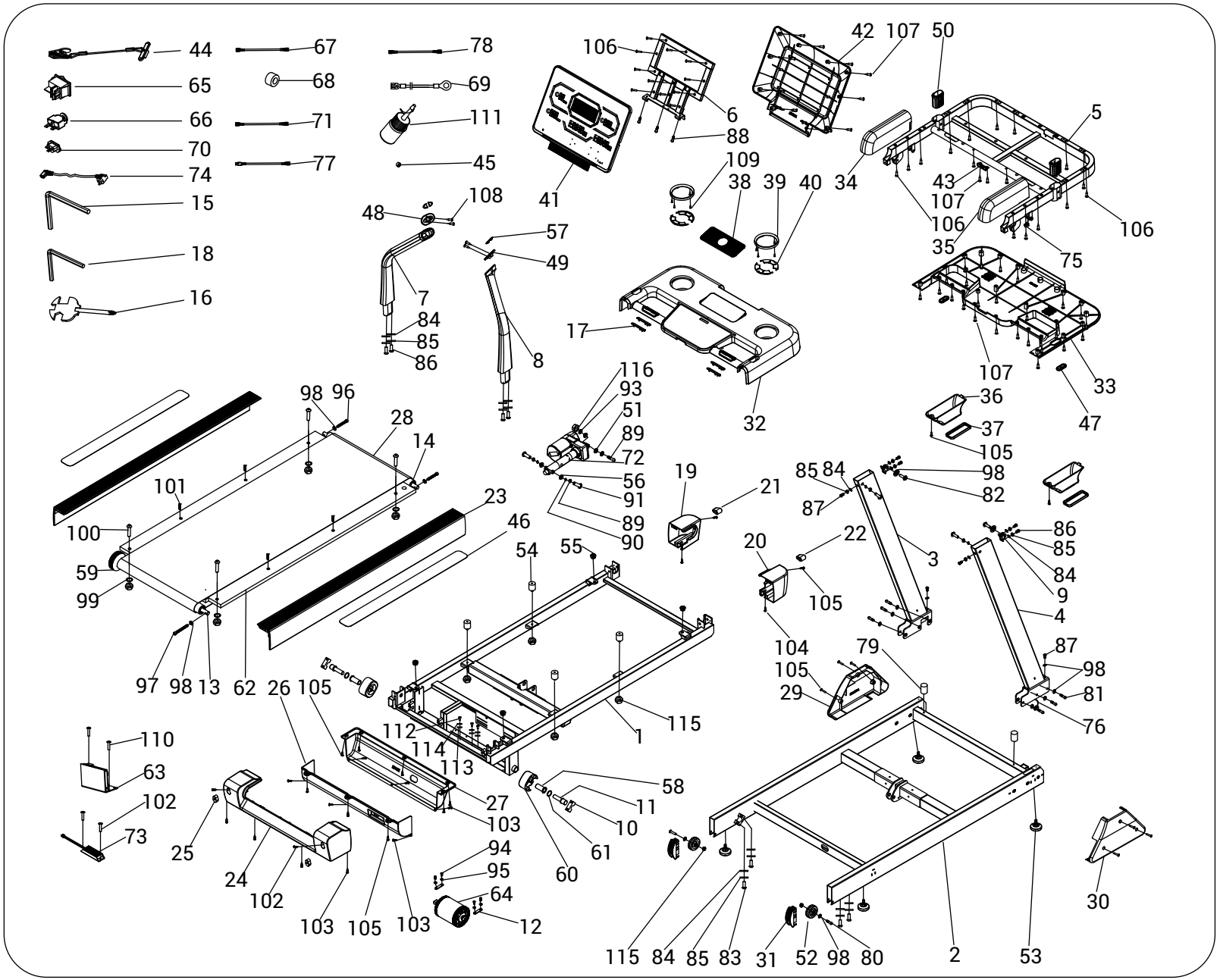

WARRANTY - RESIDENTIAL

Effective August 15, 2026- **TR85H Hiker Treadmill LIMITED WARRANTY**

XTERRA Fitness Inc. warrants all its home use Hiker Treadmill parts for a period of time listed below, from the date of retail sale, as determined by a sales receipt or in the absence of a sales receipt, eighteen (18) months from the original factory shipping date. XTERRA Fitness's responsibilities include providing new or remanufactured parts, at XTERRA Fitness's option, and technical support to our independent dealers and servicing organizations. In the absence of a dealer or service organization, these warranties will be administered by XTERRA Fitness directly to a consumer. The warranty period applies to the following components:

Home Use Limited Warranty

Warranty	Frame	Parts	Labor
Residential	Lifetime	2 Years	1 Year

RESPONSIBILITIES OF THE CONSUMER

This warranty applies only to products in ordinary household use, and the consumer/facility is responsible for the items listed below:

1. Proper use of the Hiker Treadmill in accordance with the instructions provided in this manual
2. Proper installation in accordance with instructions provided with the Hiker Treadmill and with all local electric codes.
3. Expenses for making the Hiker Treadmill accessible for servicing, including any item that was not part of the Hiker Treadmill at the time it was shipped from the factory.
4. Damages to the Hiker Treadmill finish during shipping, installation or following installation.
5. Routine maintenance of this unit as specified in this manual.

WARRANTY - CONTINUED

What is not covered?

EXCLUSIONS

This warranty does not cover the following:

1. CONSEQUENTIAL, COLLATERAL, OR INCIDENTAL DAMAGES SUCH AS PROPERTY DAMAGE AND INCIDENTAL EXPENSES RESULTING FROM ANY BREACH OF THIS WRITTEN OR ANY IMPLIED WARRANTY.
   Note: Some states do not allow the exclusion or limitation of incidental or consequential damages, so this limitation or exclusion may not apply to you.
2. Service call reimbursement to the consumer. Service call reimbursement to the dealer that does not involve malfunction or defects in workmanship or material, for units that are beyond the warranty period, for units that are beyond the service call reimbursement period, for Hiker Treadmill not requiring component replacement, or Hiker Treadmill not in ordinary household or light commercial use.
3. Damages caused by services performed by persons other than authorized XTERRA Fitness service companies; use of parts other than original XTERRA Fitness parts; or external causes such as corrosion, discoloration of paint or plastic, alterations, modifications, abuse, misuse, accident, improper maintenance, inadequate power supply, or acts of God.
4. Products with original serial numbers that have been removed or altered.
5. Products that have been: sold, transferred, bartered, or given to a third party.
6. XTERRA Fitness reserves the right to request proof of purchase if no warranty record exists for the product.
7. THIS WARRANTY IS EXPRESSLY IN LIEU OF ALL OTHER WARRANTIES EXPRESSED OR IMPLIED, INCLUDING THE WARRANTIES OF MERCHANTABILITY AND/OR FITNESS FOR A PARTICULAR PURPOSE.
8. Product use in any environment other than a residential setting or non-dues paying facility with 5 hours use or less per day.
9. Warranties outside of the United States may vary. Please contact your local dealer for details.

Product features or specifications as described or illustrated are subject to change without notice. All warranties are made by XTERRA Fitness, Inc. This warranty applies only in the 48 contiguous United States. NOTE: This does not include Alaska or Hawaii.

WARRANTY - CONTINUED

Responsibilities of the Owner

SERVICE

Keep your bill of sale. Twelve (12) months from the date on the bill of sale or eighteen (18) months from the date of factory shipping as determined by the serial number establishes the labor warranty period should service be required. If service is performed, it is in your best interest to obtain and keep all receipts. This written warranty gives you specific legal rights. You may also have other rights that vary from state to state. Service under this warranty must be obtained by following these steps, in order:

1. Contact your selling authorized XTERRA Fitness dealer. OR
2. Contact your local authorized XTERRA Fitness service organization.
3. If there is a question as to where to obtain service, contact our service department at (870)-336-4286.
4. XTERRA Fitness' obligation under this warranty is limited to repairing or replacing, at XTERRA Fitness' option, the product through one of our authorized service centers. All repairs must be preauthorized by XTERRA Fitness. If the product is shipped to a service center freight charges to and from the service center will be the customer's responsibility. For replacement parts shipped while the product is under warranty, the customer will be responsible for shipping and handling charges. For in-home service, the customer will be responsible for a trip charge. There will be an additional trip charge if the customer is located over 100 miles from the nearest service center.
5. The owner is responsible for adequate packaging upon return to XTERRA Fitness. XTERRA Fitness is not responsible for damages in shipping. Make all freight damage claims with the appropriate freight carrier. DO NOT SHIP ANY UNIT TO OUR FACTORY WITHOUT A RETURN AUTHORIZATION NUMBER. All units arriving without a return authorization number will be refused.

For any further information, or to contact our service department by mail, send your correspondence to:

XTERRA Fitness, Inc.

P.O. Box 2037

Jonesboro, AR 72402-2037

Product features or specifications as described or illustrated are subject to change without notice. All warranties are made by XTERRA Fitness, Inc. This warranty applies only in the 48 contiguous United States. NOTE: This does not apply to Alaska or Hawaii.

TROUBLESHOOTING

The elevation adjustment error E7 is displayed in the INCLINE window, while all other error codes are displayed on the DM.

Exception codes	Error Description	Countermeasures
E01	Overload	1. Possible cause: Excessive current due to overloading triggers system self-protection; restarting should resolve the issue. 2. A part of the treadmill may be stuck, preventing the motor from turning, causing overloading and excessive current, triggering system self-protection. Adjusting the treadmill and restarting it, or adding lubricating oil, should resolve the issue. 3. Check the motor for excessive current noise or a burning smell; replace the motor if necessary. 4. Replace the controller.
E02	Hall error	1. Check if the motor wiring is connected properly, and reconnect the motor wiring if necessary. 2. Replace the motor. 3. Replace the controller.
E03	Hardware overcurrent	1. The possible cause is excessive current due to exceeding the rated load, triggering the system's self-protection mechanism. A restart should resolve the issue. 2. Check if the power socket plug and motor connection are loose. 3. Replace the controller.
E04	Phase loss	1. Check if the motor wiring is connected properly, and reconnect the motor wiring if necessary. 2. Replace the motor. 3. Replace the controller.
E05	undervoltage	1. Check if the input power voltage is normal. 2. Check if the power socket plug connection is loose.
E06	overvoltage	1. Check if the input power supply voltage is normal.
E08	Hardware error	1. Check if the power socket plug and motor connection are loose. 2. Replace the controller.
E31	OVERHEATING	1. Run the machine only after the motor temperature has returned to normal.

TROUBLESHOOTING

Exception codes	Error Description	Countermeasures
---/SF	Safety key not engaged / Solenoid valve locking motor	1. Check if the safety switch button moves smoothly and freely. 2. Check if the safety switch connection plug is loose or disconnected. 3. Check if the safety switch board is damaged. 4. Check if the electronic watch is damaged.
E07	Ascent adjustment error	1. Check that the lifting cable is properly connected. 2. Reconnect the lifting cable and then power on again. 3. Reconnect the lifting cable and then recalibrate.
E17	Correcting errors	1. Check that the lifting cable is properly connected. 2. After reconnecting the lifting cable, recalibrate.
E22	Communication error between central control and lower control systems	1. Check if the central locking wires are loose or disconnected from the controller. 2. Check if the controller is damaged. 3. Check if the central locking system is damaged.
E23	Communication error between electronic watch and central control unit	1. Check if the wiring between the electronic watch and the central locking system is making good contact. 2. Check if the electronic watch is damaged. 3. Check if the central locking system is damaged.

INFORMATION

INFORMATION:
Bluetooth operating frequency band: 2402-2480 MHZ
Maximum RF transmission power: 3.0dbm EIRP
Noise emission according to Directive 2006/42/EC Annex I 1.7.4.2(u):58db

3000 Nestle Road Jonesboro, AR 72401 | Phone: 870-336-4286 | Fax: 870-935-7611

©2026 All Rights Reserved.