XTERRA FITNESS

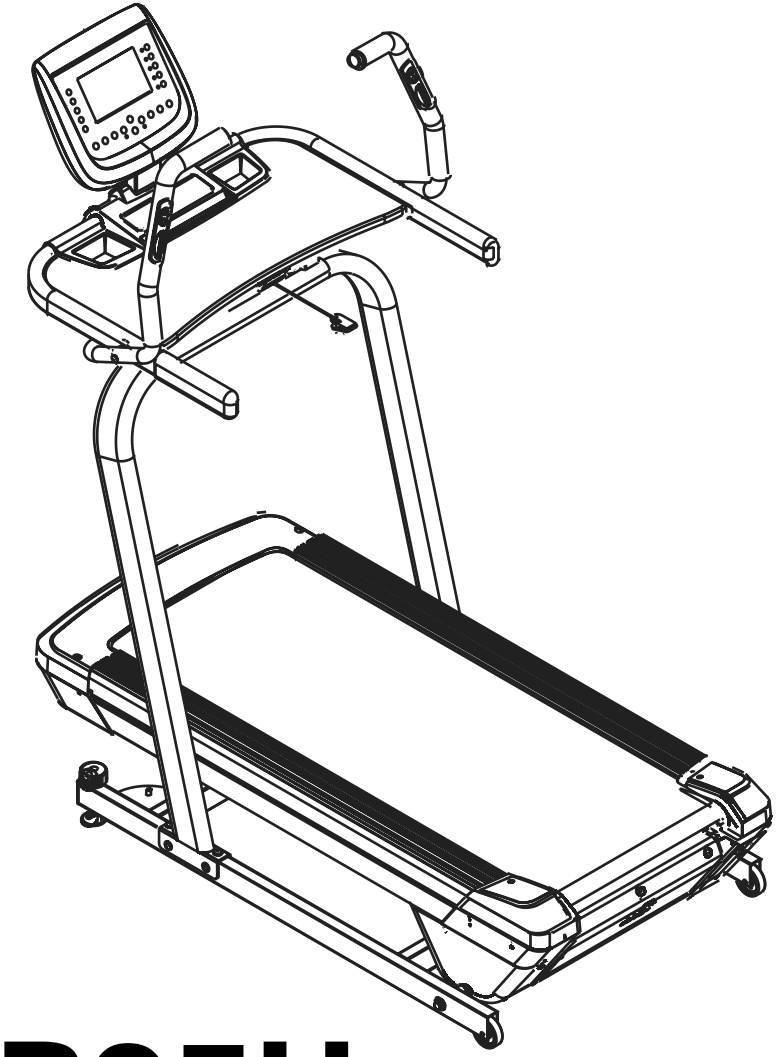

TR95H HIKER TREADMILL

TR95H_OwnersManual_195813_20240119

Online Support

If you require assistance or are experiencing issues with your XTERRA Machine, please contact customer care for additional help.

1-800-258-8511

questions@xterrafitness.com

Warranty Registration

Scan to quickly and easily register your new XTERRA Fitness machine.

Table of Contents

Product Registration 3
Warning / Safety Instructions
Product Labels 4
Safety Instructions 5
Electrical Safety 6
Grounding & Location Requirements 7
Parts and Assembly
Parts of your Unit 8
Parts Included 9
Assembly 11
Setting Up Your Unit 16
Safety Key 17
Technology and Features
About Your Machine 18
Console Screen - Overview 19
Console Features 20
Quick Start 22
Programs
Programs 23
Preset Programs 24
Wearing the Chest Strap 39
Heart Rate Exertion 40
Maintenance
Maintenance & Care 42
Deck Lubrication 46
Belt & Deck 47
Exploded View Diagram 48
Warranty & Troubleshooting
Warranty 49
Troubleshooting 52

PRODUCT REGISTRATION

Congratulations on your new Hiker Treadmill, and welcome to the XTERRA Fitness family!

Thank you for your purchase of this quality unit from XTERRA Fitness. Your new unit was manufactured by one of the leading fitness manufacturers in the world and is backed by one of the most comprehensive warranties available. XTERRA Fitness will do all we can to make your ownership experience as pleasant as possible for many years to come.

If you have questions, or if parts are missing or damaged, or you require customer service, call (870) 336-4286. Please have your model number and serial number handy when you call.

Please take a moment at this time to record the name of the dealer, their telephone number, and the date of purchase below to make any future, needed contact easy. We appreciate your support and we will always remember that you are the reason that we are in business.

Serial Number	
Date of Purchase	
Dealer / Place of Purchase	

WARRANTY REGISTRATION

Use your smartphone to scan the QR code above to quickly and easily register your new XTERRA Fitness machine.

You can also go to **xterrafitness.com/warranty** under the Support tab to register online.

Version: 3.0
Revision: 01/19/24

PRODUCT LABELS





SERIAL NUMBER STICKER

This sticker will be found on the frame near the power switch. Please record the number below the barcode for the purpose of registering your Hiker Treadmill's warranty.



PROPOSITION 65 WARNING

This sticker will be found on the frame near the power switch. The State of California requires us to inform you that this unit was manufactured using chemicals that could cause harm with improper use.



SAFETY WARNING STICKER

This sticker will be found on the interior side of your Hiker Treadmill's upright. The same warning can be found in this manual. Please read and be aware of the precautions before operating your unit.

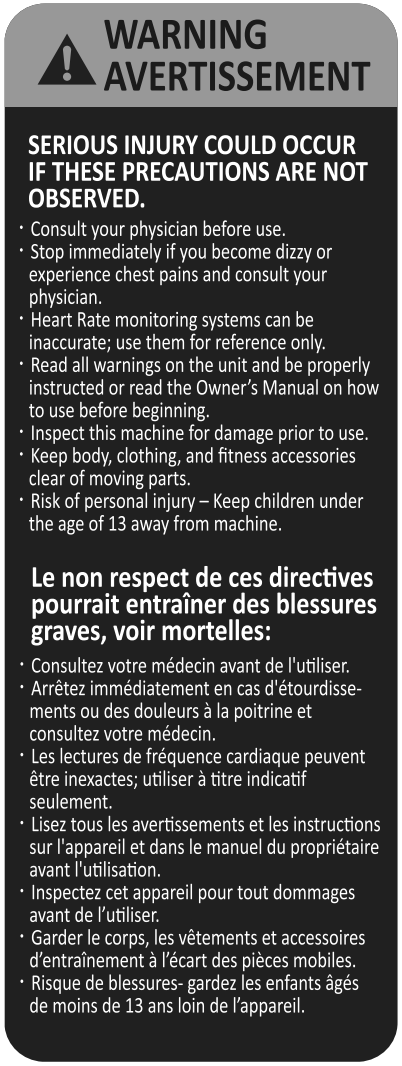

SAFETY INSTRUCTIONS

When using an electrical appliance, basic precautions should always be followed, including the following:
Read all instructions before using this appliance.

DANGER - To reduce the risk of electric shock:
Always unplug this appliance from the electrical outlet immediately after using and before cleaning.

WARNING - To reduce the risk of burns, fire electric shock, or injury to persons:

1. An appliance should never be left unattended when plugged in. Unplug from outlet when not in use, and before putting on or taking off parts.
2. Do not operate under blanket or pillow. Excessive heating can occur and cause fire, electric shock, or injury to persons.
3. This exercise equipment is not intended for use by persons with reduced physical, sensory or mental capabilities, or lack of experience and knowledge.
4. Use this appliance only for its intended use as described in this manual. Do not use attachments not recommended by the manufacturer.
5. Never operate this appliance if it has a damaged cord or plug, if it is not working properly, if it has been dropped or damaged, or dropped into water. Return the appliance to a service center for examination and repair.
6. Do not carry this appliance by supply cord or use cord as a handle.
7. Keep the cord away from heated surfaces.
8. Never operate the appliance with the air openings blocked. Keep the air openings free of lint, hair, and the like.
9. Never drop or insert any object into any opening.
10. Do not use outdoors.
11. Do not operate where aerosol (spray) products are being use or where oxygen is being administered.
12. Connect this appliance to a properly grounded outlet only. See Grounding Instructions.
13. The appliance is intended for household use.
14. To disconnect, turn all controls to the off position, then remove the plug from the outlet.
15. Do not operate equipment on deeply padded, plush or shag carpet. Damage to both carpet and equipment may result.
16. Before beginning this or any exercise program, consult a physician. This is especially important for persons over the age of 35 or persons with pre-existing health conditions.
17. Keep hands away from all moving parts.
18. The pulse sensors are not medical devices. Various factors, including the user's movement, may affect the accuracy of heart rate readings. The pulse sensors are intended only as exercise aids in determining heart rate trends in general.
19. Do not attempt to use your equipment for any purpose other than for the purpose it is intended.
20. Do not operate tablet or laptop when you are running, walking or climbing at high speed.
21. Wear proper shoes. High heels, dress shoes, sandals or bare feet are not suitable for use on your equipment. Quality athletic shoes are recommended to avoid leg fatigue.
22. **User Weight Limit: 300 lbs.**

Please ensure that you review and adhere to the user weight restrictions and power requirements of your new machine. Failure to do so may result in serious injury or damage to your machine.

ELECTRICAL SAFETY

WARNING!

Route the power cord away from any moving part of the unit including the elevation mechanism and transport wheels.

NEVER remove any cover without first disconnecting AC power. If voltage varies by ten percent (10%) or more, the performance of your unit may be affected. **Such conditions are not covered under your warranty.** If you suspect the voltage is low, contact your local power company or a licensed electrician for proper testing.

NEVER expose this unit to rain or moisture. This product is **NOT** designed for use outdoors, near a pool or spa, or in any other high humidity environment. The temperature specification is 40 degrees C, and humidity is 95%, non-condensing (no water drops forming on surfaces).

Circuit breakers: Avoid AFCI/GFCI circuit breakers if possible. These breakers may trip occasionally during exercise because of the high inrush currents of the unit drive electronics and motor. This is an issue that affects all unit brands. New laws in your area may require these breakers. If you do have these breakers and outlets in your home, and are experiencing nuisance tripping, you should check if there are any other devices plugged into the same circuit. Some examples of devices that may also cause tripping are fluorescent lights with electronic ballasts, coffee maker, space heater, hair drier.

Optimally the unit should be the only device plugged into the circuit. Our units have surge suppressors built in to help avoid nuisance tripping. We have tested several AFCI/GFCI breakers and outlets with our products. Brands we have tested are: Eaton (Cutler Hammer Series), Leviton (Smart lock pro) and Schneider Electric (Canadian home series). These breakers do not trip in our testing, when connected to our units, as long as no other devices are plugged into the same circuit.

- **NEVER** operate this unit without reading and completely understanding the results of any operational change you request from the computer.
- Understand that changes in speed and incline do not occur immediately. Set your desired work level on the computer console and release the adjustment key. The computer will obey the command gradually.
- **NEVER** use your unit during an electrical storm. Surges may occur in your household power supply that could damage unit components. Unplug the unit during an electrical storm as a precaution.
- Use caution while participating in other activities while walking on your unit; such as watching television, reading, etc. These distractions may cause you to lose balance which may result in serious injury.
- Do not use excessive pressure on console control keys. They are precision set to function properly with little finger pressure.

GROUNDING & LOCATION REQUIREMENTS

This product must be grounded. If the unit should malfunction or breakdown, grounding provides a path of least resistance for electric current, reducing the risk of electric shock. This product is equipped with a cord having an equipment-grounding plug. The plug must be plugged into an appropriate outlet that is properly installed and grounded in accordance with all local codes and ordinances.

DANGER - Improper connection of the equipment-grounding conductor can result in a risk of electric shock. Check with a qualified electrician or serviceman if you are in doubt as to whether the product is properly grounded. Do not modify the plug provided with the product if it will not fit the outlet; have a proper outlet installed by a qualified electrician.

This product is for use on a nominal 120-volt circuit, and has a grounding plug that looks like the plug illustrated below. A temporary adapter that looks like the adapter illustrated below may be used to connect this plug to a 2-pole receptacle as shown below if a properly grounded outlet is not available. The temporary adapter should be used only until a properly grounded outlet, (shown below) can be installed by a qualified electrician. The green colored rigid ear-lug, or the like, extending from the adapter, must be connected to a permanent ground such as a properly grounded outlet box cover. Whenever the adapter is used, it must be held in place by a metal screw.

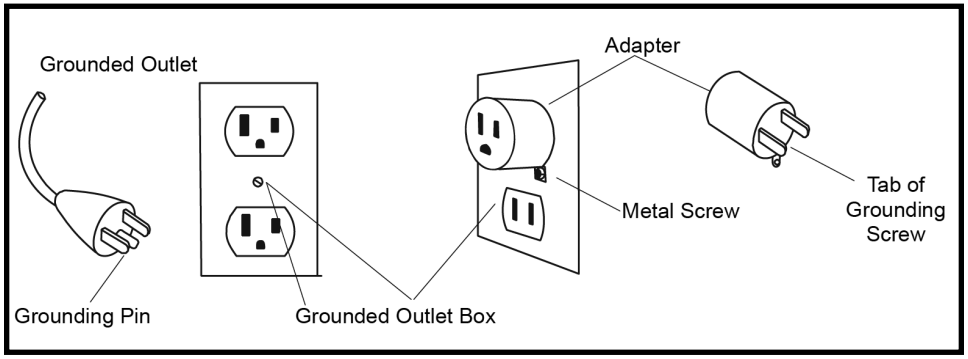

Location Requirements

After assembling your Hiker Treadmill, you'll need to make sure you've installed it in a safe area.

- We recommend that you leave an area of at least 20in on the front, and sides of your machine. The front of the unit is where the motor is located.
- We recommend that you leave an area of at least 6ft behind the Hiker Treadmill.
- Install your Hiker Treadmill in an area where children and pets cannot access it.
- Always keep the area around your Hiker Treadmill clear of furniture, exercise equipment and other debris.
- Do not install your Hiker Treadmill on deeply padded, plush, or shag carpet.

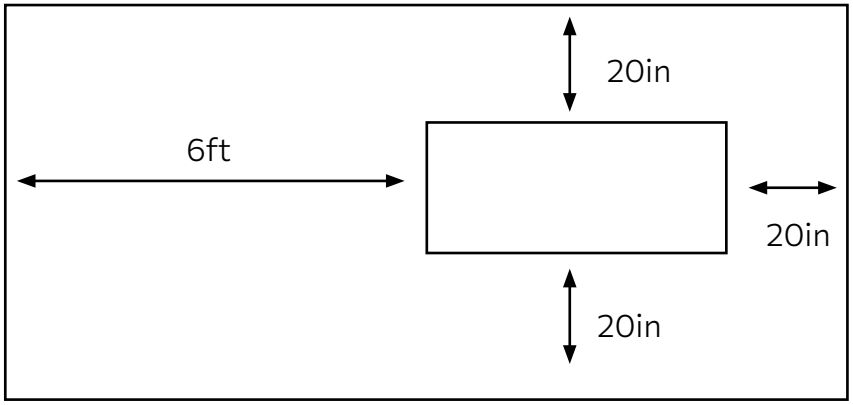

PARTS OF YOUR UNIT

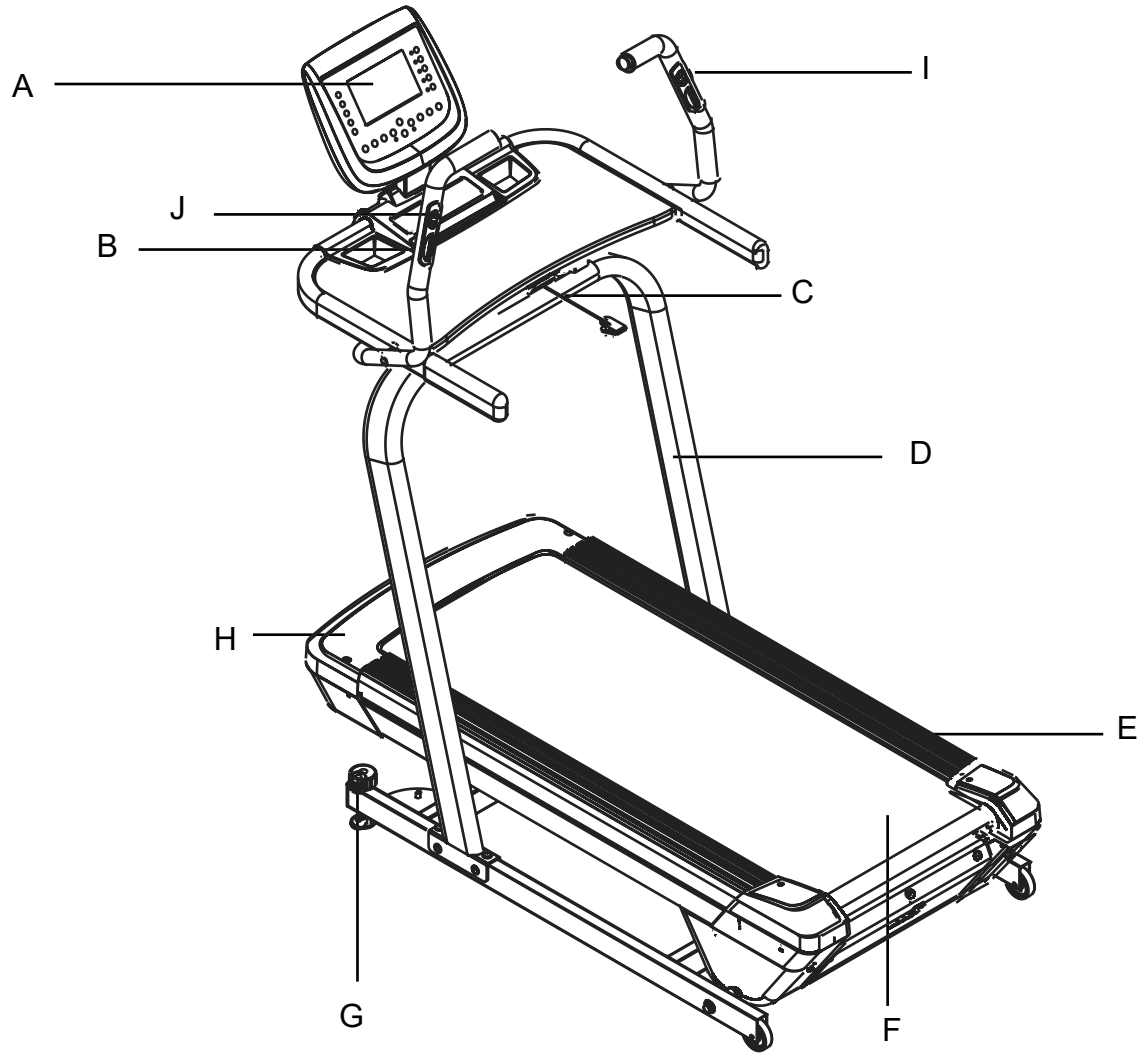

A. LCD Window
B. Hand Pulse Grips
C. Safety Key
D. Upright
E. Side Rails
F. Belt
G. Leveler
H. Motor
I. Remote Speed Buttons
J. Remote Incline Buttons

PARTS INCLUDED

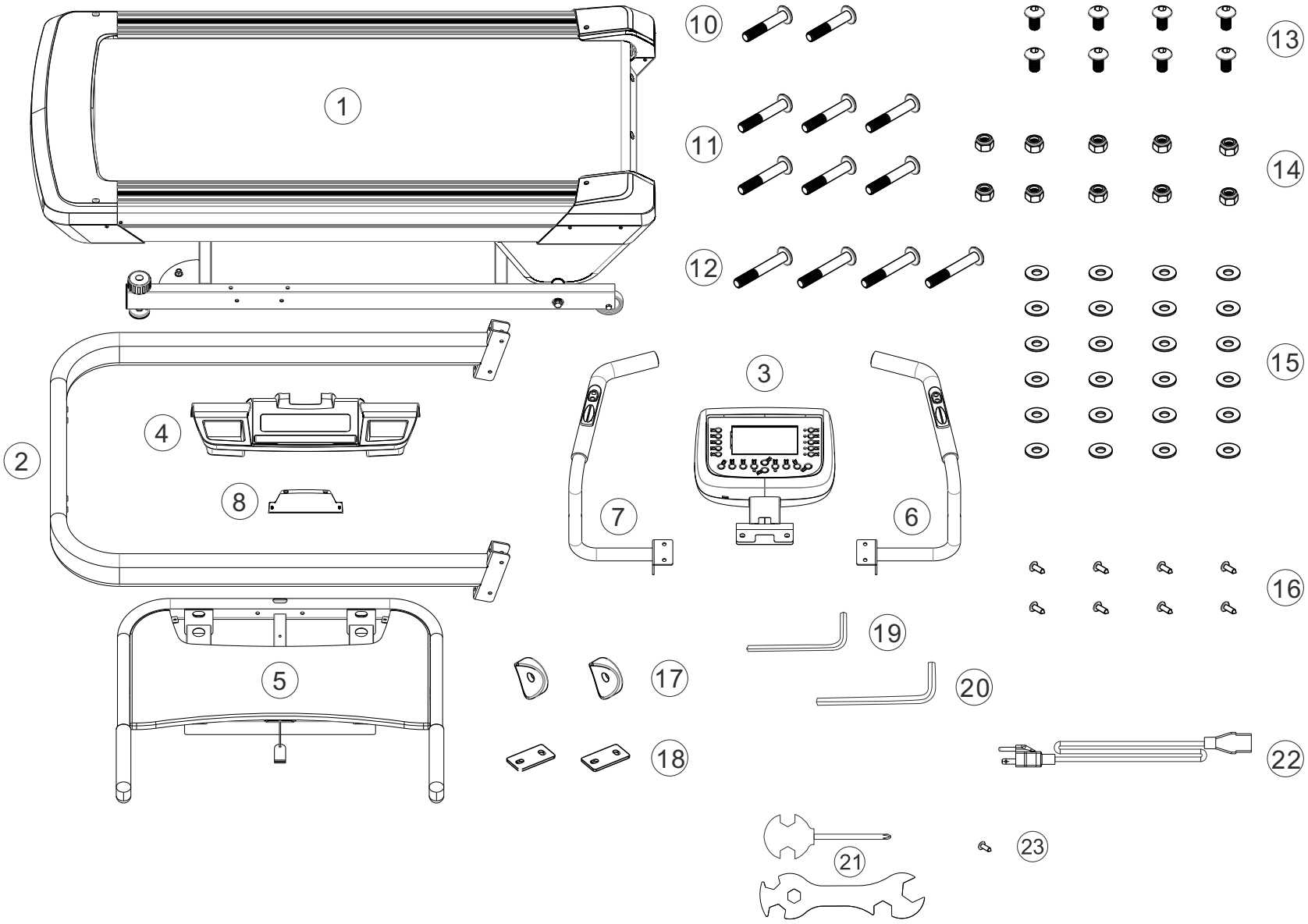

PARTS INCLUDED

No	Description	Qty
1	Main Frame	1
2	Front Post	1
3	Computer Set	1
4	Storage Box	1
5	Desk Set	1
6	Right Handlebar	1
7	Left Handlebar	1
8	Back Cover	1
10	Bolt M8 x 45 mm	2
11	Bolt M8 x 50 mm	6
12	Bolt M8 x 55 mm	4

No	Description	Qty
13	Bolt M8 x 15 mm	8
14	M8 Nylon Nut	10
15	M8 Washer x 24	24
16	Screw 5/32" x 1/2"	8
17	Spacer	2
18	Plate	2
19	Tool M5 x 35 mm	1
20	Tool M6 x 50 mm	1
21	Screw Driver	2
22	Power Cable	1
23	Screw Ø4 x 10 mm	1

ASSEMBLY

1. Please note the end with **Wire (98)** out from **Front Post (2)** is for the right side **Main Frame (1)**. Ask one person to help holding **Front Post (2),** and well connect **Wire (57)** out from **Main Frame (1)** and **Wire (89)** out from **Front Post (2).** Tuck the connector back into the hole on **Main Frame (1)**.

   Be careful not to damage the wire or the connector.

2. Mount **Front Post (2)** on each right & left side of **Main Frame (1)** and secure the post with **parts (11, 15, 14 & 13)** as shown.

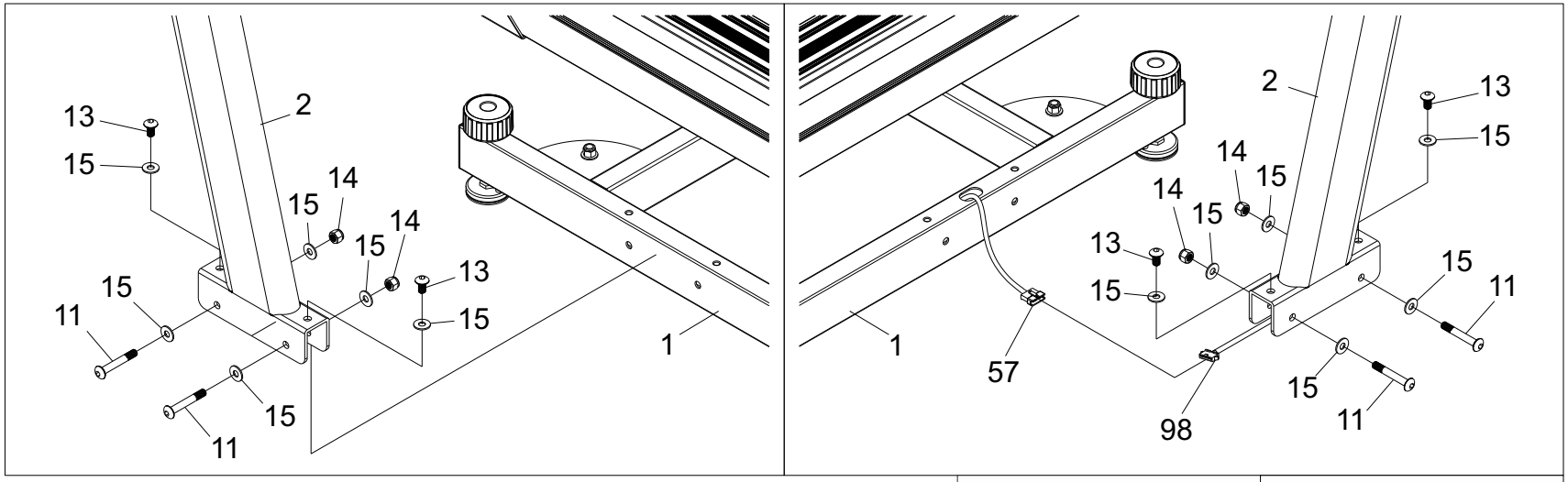

ASSEMBLY - CONTINUED

3. Loose cable tie to separate **5 Wires (102, 102a, 103 , 103a, 104)** out from **Desk Set (5)**, and **5 Wires (114, 114a, 115, 115a, 116)** out from **Computer Set (3)**. Well connect the **10 wires**. (**Connect 104 to 116; 103 to 114, 103a to 114a; and 102 to 115, and 102a to 115a**; make sure no mismatch.) Tuck the connectors one by one back into the hole on **Desk Set (5)**.
   Do not damage the wires or the connectors.
4. Install **Computer Set (3)** on **Desk Set (5)**, and secure it with **parts (11, 15 & 14)** in order as shown.
5. Mount **Storage Box (4)** on the top of **Desk Set (5)**.
6. Put on the **Back Cover (8)**, and lock it with **parts (16)**.

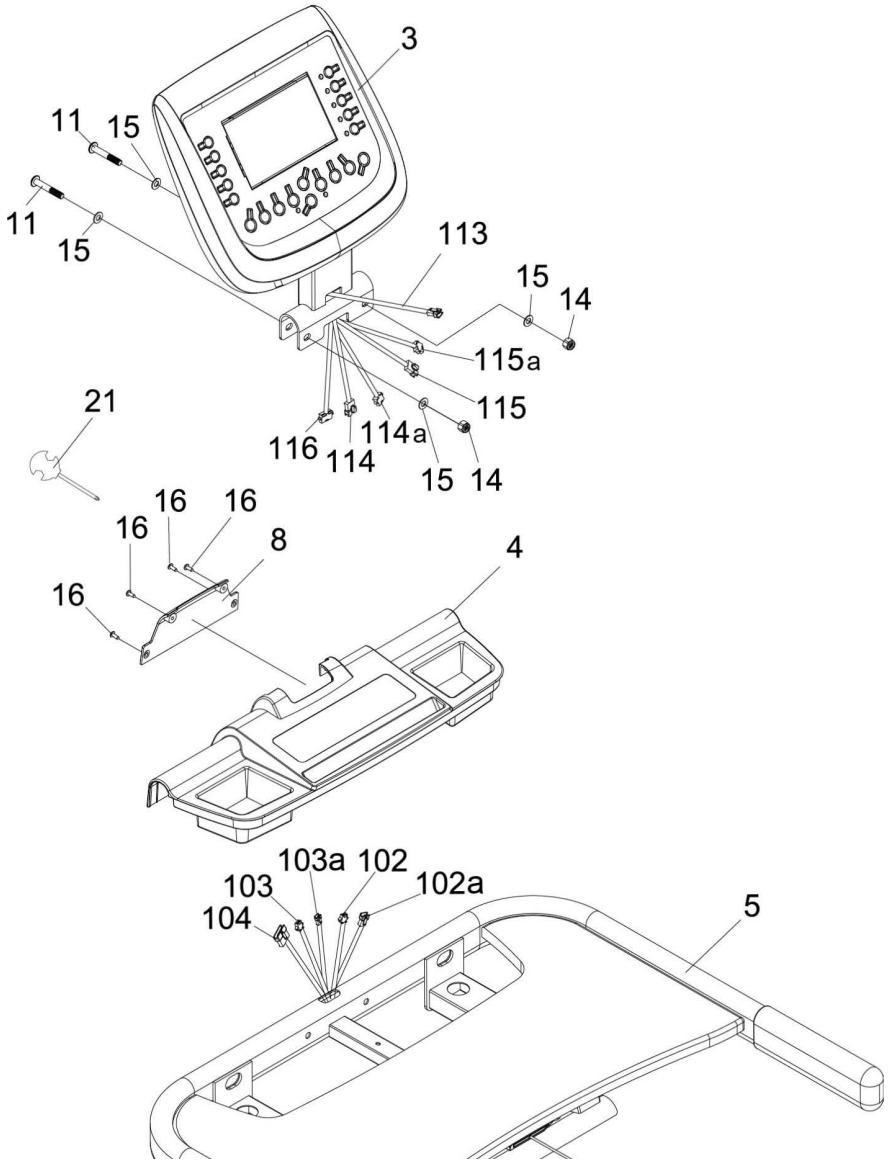

ASSEMBLY - CONTINUED

7. Use 2 **Plates (18)** and **Screws (16)** to fix **Storage Box (4)** on **Desk Set (5)** from underneath.

8. Fix **Storage Box (4)** on **Desk Set (5)** with **Screw (23)** from the hole underneath as shown. Connect **Wire (113)** out from computer with **Wire (110)** out from **Safety Key Box (9)** as shown.

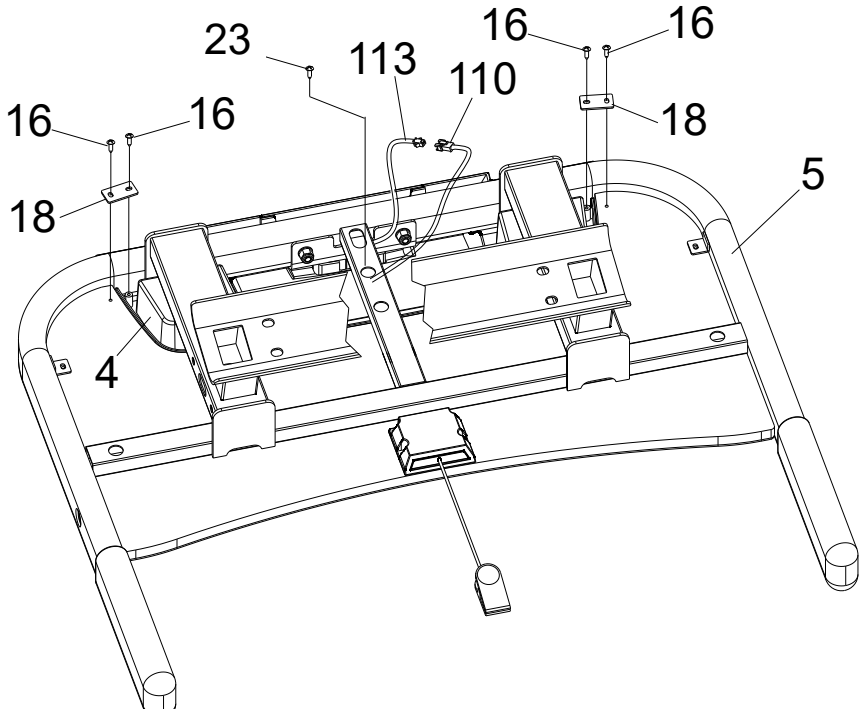

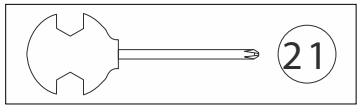

ASSEMBLY - CONTINUED

9. Ask someone to hold the assembled **Desk Set (5)** on the top of **Front Post (2)**. Connect the **Wire (116)** out from **Desk Set (5)** with the **Wire (98)** out from top of **Front Post (2)**. Tuck the connector back into the hole on the **Front Post (2)**. Be sure not to pinch the wires or the connector.

10. Attach the assembled **Desk Set** to the top of **Front Post (2)**, firmly secure it with **parts (12, 14 & 15)** as shown. Be sure not to pinch the wire or the connector.

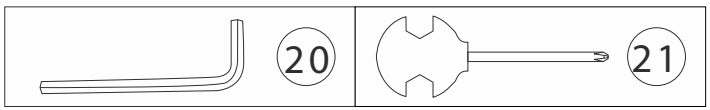

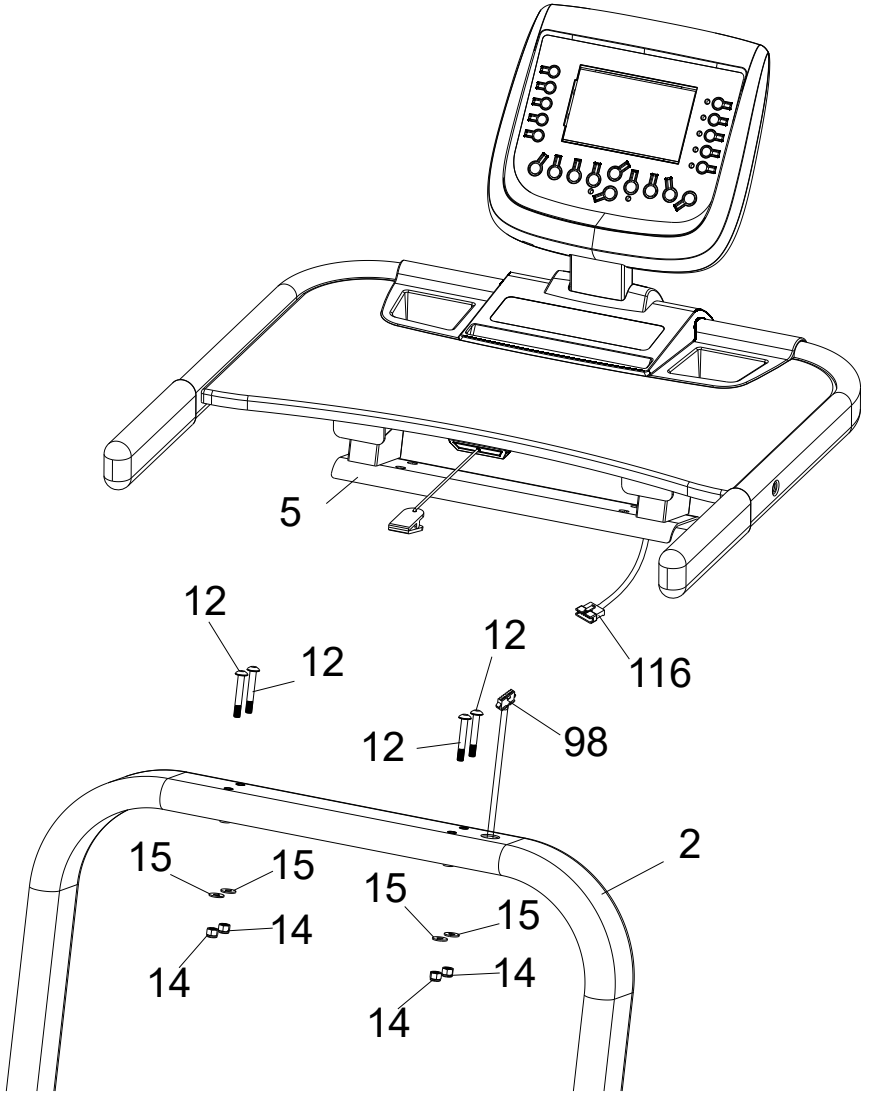

ASSEMBLY - CONTINUED

11. Ask someone to hold **Right Handlebar (6)**, connect **Wire (102)** out from assembled **Desk Set with Wire (123)** out from **Right Handlebar (6)**. Tuck the connector back into **Right Handlebar (6).**
Be sure not to damage the wire or the connector.

12. Attach the bottom end of **Right Handlebar (6)** to the right side of **Desk Set with Parts (13) & (15)** as show, but do not tighten the bolts yet.

13. Fix the middle section of **Right Handlebar (6)** onto the right side of Desk Set and firmly secure it with **parts (10 & 17)**. Now, tighten the **parts (13, 15)** on Step 13 securely. Follow the same procedure to fix **Left Handlebar (7)** on the left side of **Desk Set (5)**, and tighten the bolts accordingly.

14. Plug in **Power Cable (22)** on the **Main Switch** located on the right side of **Main frame (1)**.

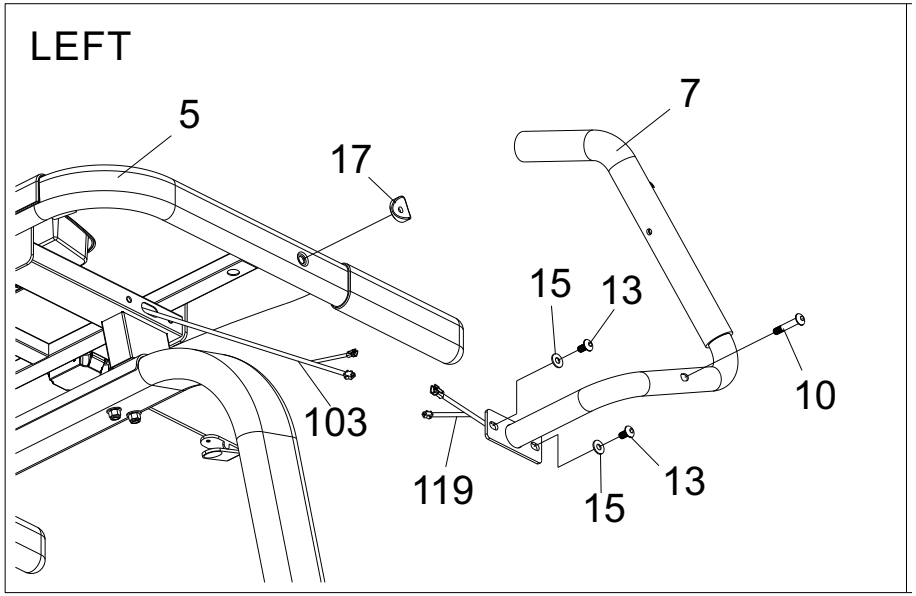

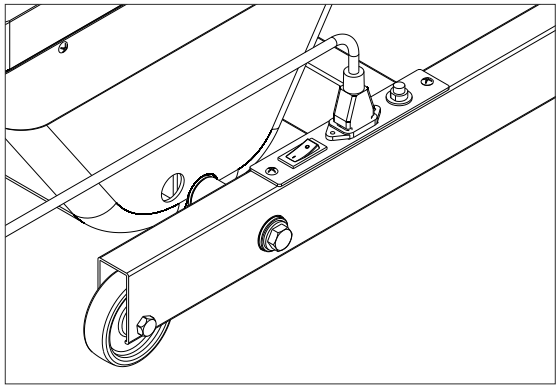

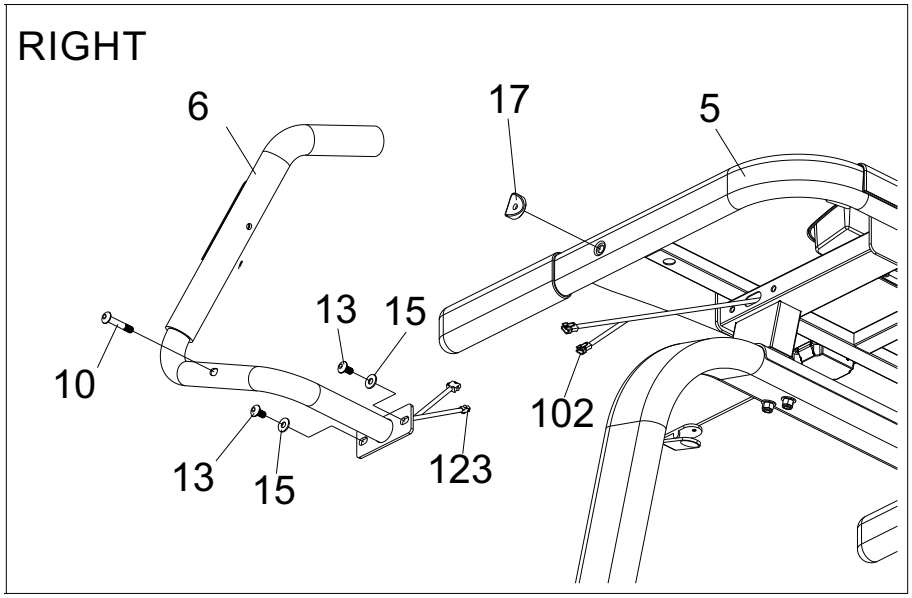

SETTING UP YOUR HIKER TREADMILL

Moving and Leveling

Please note there are 2 SwitchPro knobs at the front bottom of main frame.

1. Moving: To move the machine, turn both knobs clockwise
2. Leveling: to level the frame for operation, turn the knob counterclockwise

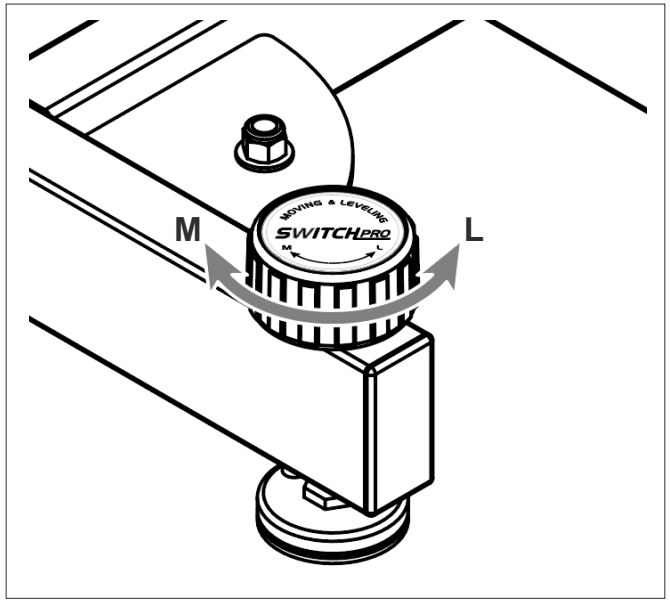

Plugging in and Powering On

Power the unit on by plugging it into an appropriate wall outlet, then turn on the power switch located at the front of the Hiker Treadmill below the motor hood, Ensure that the Safety Key is installed, as the Hiker Treadmill will not power on without it.

When the power is turned on, all the lights on the display will light up for a short time and the console will show the software version.

The Hiker Treadmill will then enter idle mode, which is the starting point for operation.

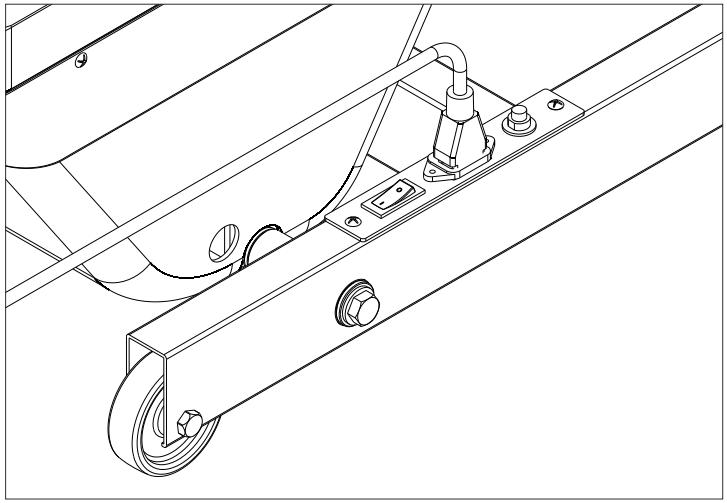

SAFETY KEY

A safety tether cord is provided with this unit.
It is a simple magnetic design that should be used at all times.
It is for your safety should you fall or move too far back on the tread-belt.
Pulling this safety tether cord will stop tread-belt movement.

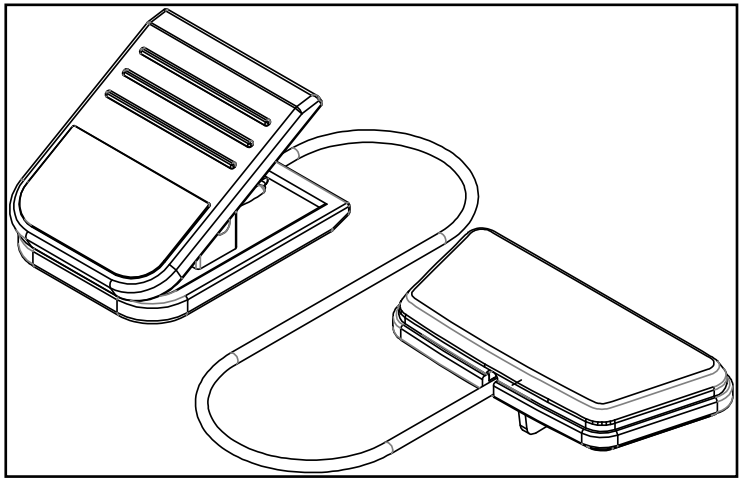

To Use:

1. Place the magnet into position on the round metal portion of the console control head. Your unit will not start and operate without this. Removing the magnet also secures the unit from unauthorized use.
2. Fasten the plastic clip onto your clothing securely to ensure good holding power. Note: The magnet has strong enough power to minimize accidental, unexpected stopping. The clip should be attached securely to make certain it does not come off. Be familiar with its function and limitations. The unit will stop, depending on speed, with a one to two step coast anytime the magnet is pulled off the console. Use the Stop / Pause switch in normal operation.

ABOUT YOUR MACHINE

Always use care and caution when operating your machine. Follow instruction in this manual to ensure safe operation and maintenance of your Hiker Treadmill

Be sure to follow XTERRA Fitness on your favorite social media platforms to view and share the latest fitness videos, images, and news.

facebook.com/XterraFitness

www.instagram.com/XterraFitness

youtube.com/user/XterraFitnessOnline

CONSOLE SCREEN - OVERVIEW



CONSOLE FEATURES

SPEED / INCLINE RANGE:

- Running Mode: 0.8 ~ 12 kph/0.5-7.5 mph, Level 0 ~ 15
- Climbing Mode: 0.8 ~ 6 kph/0.5-3.7 mph, Level 15 ~ 40

PROGRAM:

- Running Mode:
  - 12 preset with Difficult Level 1 - 3
  - 3 targets (Time, Distance, Calories)
  - HR (Max, Interval, Threshold, Marathon, Easy) / 0.5 mph – 6.2 mph, Level 0-15
  - Fat
- Climbing Mode:
  - 5 preset
  - 3 targets (Time, Distance, Calories)
  - HR (Max, Interval, Threshold, Marathon, Easy) / 0.5 mph– 2.5 mph, Level 15-40
  - Fat
- Defaulted data: Gender – Male, Age – 30, Height – 67 in, Weight – 154 lb, Time – 30 Minutes, Resting Heart Rate – 72 bpm, Target Distance – 1.0 mile, Target Calories – 10Kcal, Target Time – 30 Minutes

FUNCTION DISPLAY:

1.	PULSE window:	(A) Heartbeat 0 ~ 200bpm (B) Body Type 1 ~ 5 (C) RESTING HEART RATE.
2.	CALORIES window:	(A) Calories 10 ~ 999 Kcal (B) Height 20 ~ 98 cm
3.	STEP window:	(A) Step count (B) BMR
4.	DISTANCE window:	(A) Distance 0 ~ 99.9 mile (B) FAT%
5.	PROGRAM window:	(A) Running Mode 1 ~ 12, Climbing Mode 1 ~ 5. (B) BMI (C) U0 ~ U3
6.	GENDER window:	Male / Female
7.	INCLINE window:	(A) Level 0 ~ 15 for Running mode, Level 15 ~ 40 for Climbing Mode (B) Age 10 ~ 99 years old. Default setting: 30 years old (C) Difficult Level 1 ~ 3
8.	TIME window:	00:00 ~ 99:59
9.	SPEED window:	(A) Running Mode 0.8 ~ 12 kph, Climbing Mode 0.8 ~ 6 kph (0.5 – 7.5 mph / 0.5 – 3.7 mph) (B) Weight 44 ~ 309 lb
10.	Speed Unit:	KM or MILE (Default Setting KM)
11.	Dot Matrix:	16 x29 Dot

CONSOLE FEATURES

BUTTON FUNCTION:

1. Direct Incline Buttons: Quick incline selection for Climbing mode.
2. INCLINE / : (A) Setting data
   (B) Selecting preset program & level
   (C) Adjusting incline.
   (D) Choosing U0 ~ U3 to key in personal data. U0: To be keyed in data but no memory. U1, U2, & U3 are for memory of 3 users. This data can be deleted by pressing and holding Enter for 3 seconds for re-input.
3. COOL DOWN : Press to lower down speed & incline instantly. Re-pressing will resume to original program.
4. Climbing mode : For climbing exercise
5. START : For starting the machine or waking up the sleeping mode
6. STOP : For temporary stopping the machine, pressing for 3 seconds, all system set to 0.
7. Running mode : For running exercise
8. ENTER : For confirming setting data
9. SPEED : (A) Setting data
   (B) Selecting preset program & level
   (C)Adjusting speed.
10. Max, Interval, Threshold, Marathon, Easy: For Heart Rate training. Easy is the lowest, Max is the highest heart rate zone.
11. LAP: Each dot is 8 meters (0.00497 miles, one lap is 400 meters (.25 miles), 0 ~ 99 lap.
12. USB PORT: Located at the bottom left of the console for the charging of tablets and cell phones.

OPERATION & QUICK START

HOW TO OPERATE
To start operation, press either Running Mode or Climbing Mode button

OPERATION
After pressing Running or Climbing Mode button, press Start for quick start operation or press Incline to choose U0 - U3 to key in user data for program operation.

FOR QUICK START OPERATION
Press **Start** to start running. Press I**ncline Up/Down** and **Speed Up/Down** to adjust incline (Level 0-15 for Running, Level 15-40 for Climbing) and speed (0.5 mph – 7.5 mph for Running, 0.5 mph – 3.7 mph for Climbing). Lap 00 appears on the left and one dot flashes on the right side of LCD. One dot represents 8 meters (0.00497 miles), 1 circle represents 400m (0.25 miles). When 00 jumps to 01, you have run 400 meters (0.25 mile).

PROGRAMS - TO SELECT AND START A PROGRAM

FOR PROGRAM OPERATION

1. Press Incline Up / Down to choose U0, U1, U2 or U3.
2. Press Enter, then press Speed Up/Down to key in gender, age, height, weight, and resting heart rate (RHR)
3. Press Enter to confirm
4. Press Start to begin or press Incline Up / Down or Speed Up / Down to choose either Preset, Target or HR program for operation.

PRESET PROGRAM OPERATION

1. Press Incline Up / Down or Speed Up/Down to choose P1 ~ P12 for Running (P1 ~ P5 for Climbing).
2. Press Enter, L1 flashes, press Incline Up /Down or Speed Up / Down to choose L1 ~ L3. (No difficulty level adjustment for Climbing mode)
3. Press Enter , default setting time 30 flashes. Press Incline Up / Down or Speed Up / Down to set desired workout time.
4. Press Start to start running

Please refer to Page 25 for preset program profile and data.

TARGET PROGRAM OPERATION

1. Press Incline Up/Down or Speed Up/Down to choose target distance, time or calories.
2. Press Enter then press Incline Up/Down or Speed Up/Down to set target data.
3. Press Start to start running.

HEART RATE (HR) PROGRAM OPERATION:
0.5 MPH – 6.2 MPH, LEVEL 0-15 FOR RUNNING / 0.5 MPH – 2.5 MPH, LEVEL 15-40 FOR CLIMBING)

1. Press Max, Interval, Threshold, Marathon, or Easy. LCD will show heart rate zone then Choose Program or Start.
2. Press Enter and Incline Up / Down or Speed Up / Down to set workout time.
3. Press Start to start running. Computer will detect to compare user's heart rate and set heart rate to adjust speed and incline as described on page 25.

PRESET PROGRAMS

1. For HR programs operation, wear a transmitter (sold separately) or hold both hands on the pulse plates on both handlebars to detect heartbeat.
2. If user's heart rate is lower than set target per detection, speed will automatically increase 0.2km. When the speed is at highest 10kph, but user's heart rate is still lower, then incline will increase 1 level each time. When the speed is at the highest 10km, and incline also at the highest level 40, but user's heart rate is still lower than target heart rate, machine will keep running following the highest speed and incline.
3. If user's heart rate is higher than set target per detection, speed will automatically decrease 0.2km per time. When the speed is at the lowest, but user's heart rate is still higher, then incline will decrease 1 level each time. When the speed and incline are at the lowest but user's heart rate is still higher than target heart rate, machine will stop automatically.
4. If computer did not detect heartbeat for continuous 20 seconds, machine will stop and NO PULSE will show on the console.
5. How to calculate heart rate zone:

INTENSITY	HRR (%)
Easy	59 - 74%
Marathon	74 - 84%
Threshold	84 - 88%
Interval	88 - 95%
Max	95 - 100%

6. How to accurately detect your RHR, Resting Heart Rate?
   For reference: On the following day after resting day, after getting up in the morning, supplement water of 250 ~ 300 cc, then stand up to check your pulse for continuous 3 minutes to get the most accurate Resting Heart Rate.

OTHER INSTRUCTIONS

1. 1. At any time, you may switch from Running Mode to Quick Start of Climbing mode or from Climbing Mode to Running Mode.
2. 2. Switching of Max, Interval, Threshold, Marathon, or Easy
   a) Switching from low to high, speed and incline will remain the same. HR will lift to the high level.
   b) Switching from high to low, speed and incline will decrease 50%, HR will lower to low level.
3. If machine stops operation for 20 minutes, system will be reset.
4. When machine starts but no user runs on the deck for 3 minutes, machine will stop. 20 minutes after, whole system will be reset.
5. In standby mode, if machine in not operated for 5 minutes, computer screen will hibernate. Pres START button to wake up.

Target Heart Rate Zone = (MHR - RHR) x HRR% + RHR
MHR (Max. Heart Rate) = 220 - age (For male)
226 - age (For female)

PRESET PROGRAMS

FAT program

1. Press Incline / or Speed / to choose FAT program.
2. Press Enter and then Start to start detecting. Around 12 seconds after, computer will show user's BMI, BMR, FAT% and BODY TYPE. Since this machine is not for medical use, above data are only for reference and not for medical purpose. Please note user has to hold both hands on the pulse plate. LCD Will show NO PULSE if computer could not detect user's heartbeat.

BMI (Body Mass Index)

Get a numeric measure of BMI from your height and current weight to see if in healthy range. How to calculate: If user is 60kgs weight, and 165cm tall, then BMI is 22. BMI 22 KG/(MxM) = 60 / (1.65 x 1.65)

Self evaluate if you fall within the target BMI range, and use exercise and control diet to reach or stay within the target BMI range. Note: BMI does not differentiate between muscle and fat mass.

	(BMI) (kg/m2)
Underweight	BMI < 18.5
Normal	18.5 ≤ BMI < 25
Overweight	25 ≤ BMI < 30
Moderately Obese	30 ≤ BMI < 35
Severely Obese	35 ≤ BMI < 45
Very Severely Obese	40 ≤ BMI

BMR (Basal Metabolic Rate)

Also called resting energy expenditure and is mostly determined by your genetic makeup and body weight. It is the amount of energy required to maintain the basal metabolism for a specified unit of time. The BMR resulting from our machine based on 4 major factors: Sex, Height, Weight & Age. So when you key in personal data, you will read your BMR in the computer.

You may also refer to below formula to calculate your BMR.

Male = 66 + (13.7 x Weight kg) + (5 x Height cm) - (6.8 x Age)

Female = 655 + (9.6 x weight kg) + (1.7 x Height cm) - (4.7 x Age)

Body Type: 1 - 5

1	Skinny
2	Underweight
3	Normal
4	Overweight
5	Extremely Overweight

Fat %

Male	10 - 20%	Normal
	20 - 25%	Overweight
	Over 25%	Extremely Overweight

Female	15 - 25%	Normal
	25 - 35%	Overweight
	Over 35%	Extremely Overweight

PRESET PROGRAMS

COOL DOWN Mode:

1. After pressing Cool Down, incline will be lowered down to the lowest level, and speed will lower down to 2kph/2.0mph.
2. Time, Calories, and Distance will keep accumulating.
3. Pressing Cool Down again will resume to the original program.

Notice about STEP count:

1. This machine offers function of walking training to detect and accumulate total walking steps to incorporate user's own count goal.
2. Step count will start in 20 seconds after user steps on the machine and walks around 20 ~ 30 steps.
3. The accuracy will be less for those who walk lightly. The accuracy for users over 100lbs who walk 1.2-3.7 mph with stable steps will get accuracy of around 97%.

PRESET PROGRAMS - RUNNING MODE

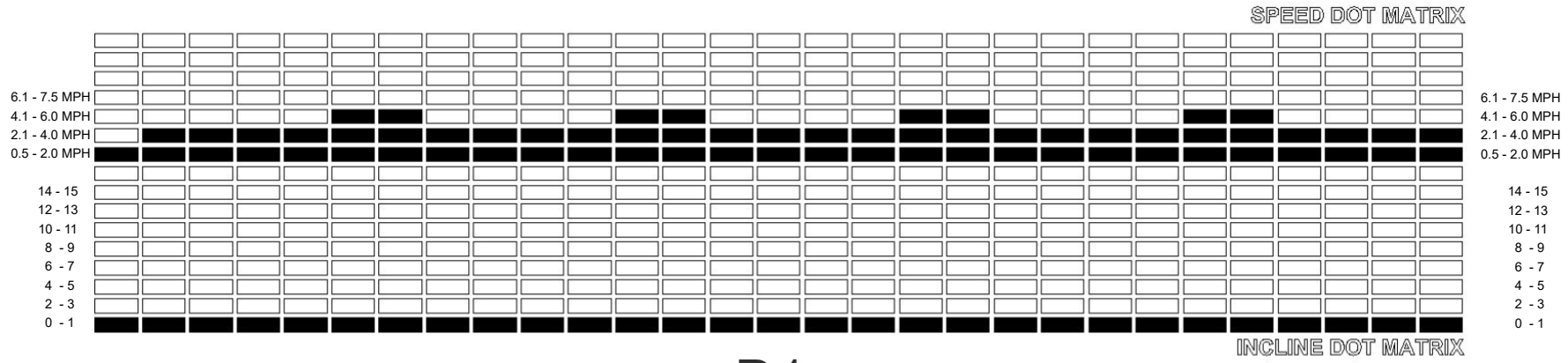

P1

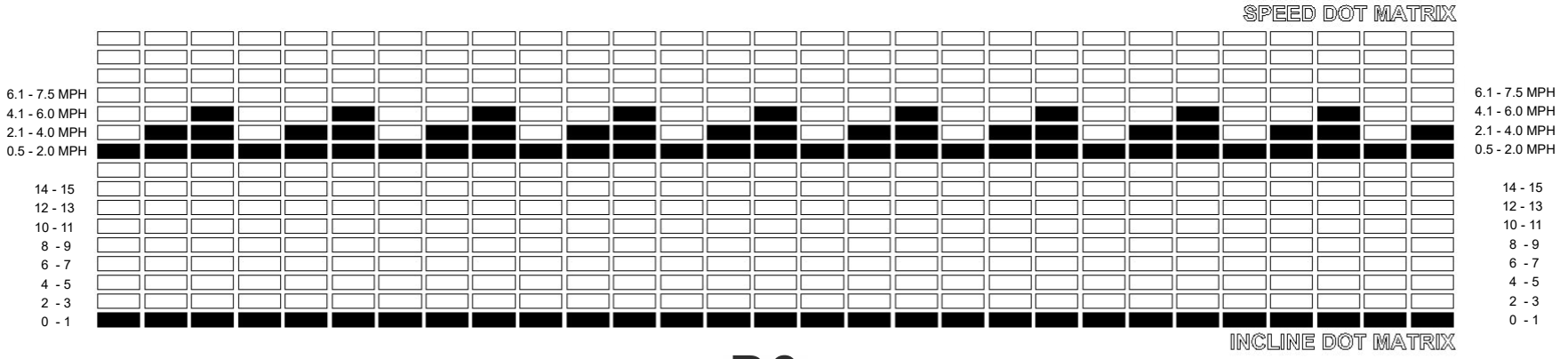

P2

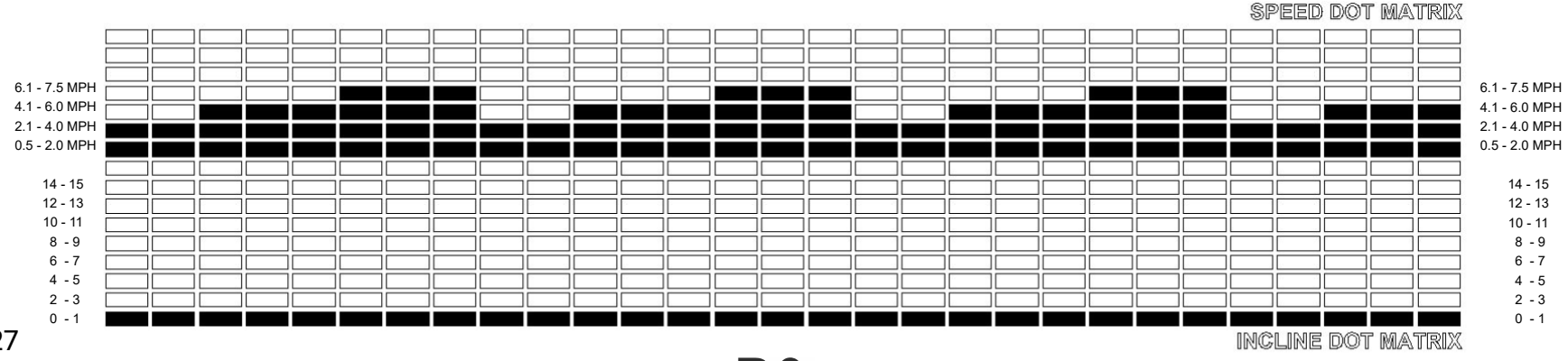

P3

PRESET PROGRAMS

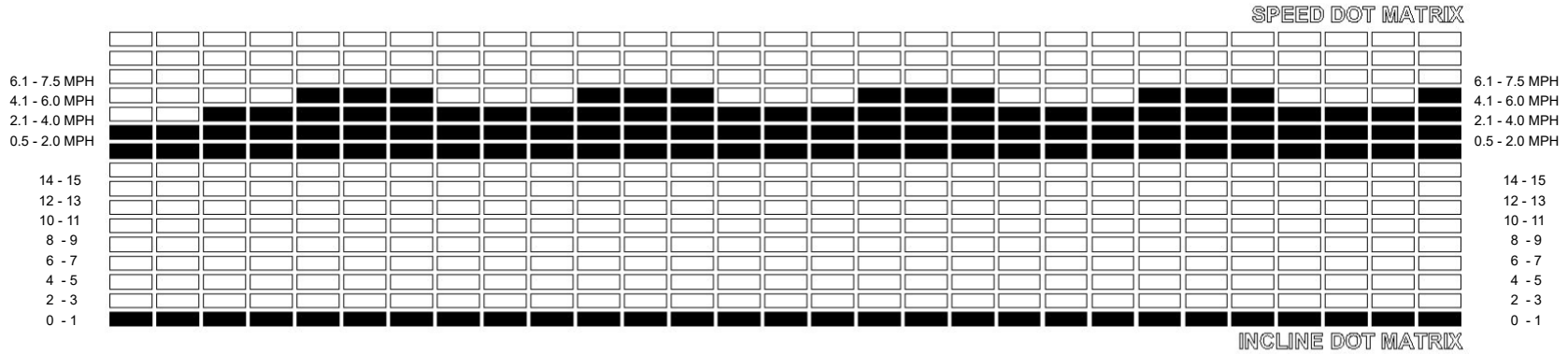

P4

PRESET PROGRAMS

Speed	P1		P2		P3		P4	
Level 1	Speed	Incline	Speed	Incline	Speed	Incline	Speed	Incline
Interval 1	2.0 MPH	0	2.0 MPH	0	3.0 MPH	0	3.0 MPH	0
Interval 2	3.0	0	4.0	0	3.0	0	4.0	0
Interval 3	3.0	0	6.0	0	6.0	0	5.0	0
Interval 4	4.0	0	2.0	0	6.0	0	6.0	0
Interval 5	4.0	0	4.0	0	6.0	0	7.0	0
Interval 6	5.0	0	6.0	0	7.5	0	7.5	0
Interval 7	5.0	0	2.0	0	7.5	0	7.0	0
Interval 8	3.0	0	4.0	0	7.5	0	6.0	0
Interval 9	3.0	0	6.0	0	3.0	0	5.0	0
Interval 10	4.0	0	2.0	0	3.0	0	6.0	0
Interval 11	4.0	0	4.0	0	6.0	0	7.0	0
Interval 12	5.0	0	6.0	0	6.0	0	7.5	0
Interval 13	5.0	0	2.0	0	6.0	0	7.0	0
Interval 14	3.0	0	4.0	0	7.5	0	6.0	0
Interval 15	3.0	0	6.0	0	7.5	0	5.0	0
Interval 16	4.0	0	2.0	0	7.5	0	6.0	0
Interval 17	4.0	0	4.0	0	3.0	0	7.0	0
Interval 18	5.0	0	6.0	0	3.0	0	7.5	0
Interval 19	5.0	0	2.0	0	6.0	0	7.0	0
Interval 20	3.0	0	4.0	0	6.0	0	6.0	0
Interval 21	3.0	0	6.0	0	6.0	0	5.0	0
Interval 22	4.0	0	2.0	0	7.5	0	6.0	0
Interval 23	4.0	0	4.0	0	7.5	0	7.0	0
Interval 24	5.0	0	6.0	0	7.5	0	7.5	0
Interval 25	5.0	0	2.0	0	3.0	0	7.0	0
Interval 26	3.0	0	4.0	0	3.0	0	6.0	0
Interval 27	3.0	0	6.0	0	6.0	0	5.0	0
Interval 28	4.0	0	2.0	0	6.0	0	6.0	0
Interval 29	4.0	0	4.0	0	6.0	0	7.0	0

LEVEL 2 Based on LEVEL 1, but increases 2.0 MPH, no change on Incline.
LEVEL 3 Based on LEVEL 2, but increases 2.0 MPH, no change on Incline.

PRESET PROGRAMS

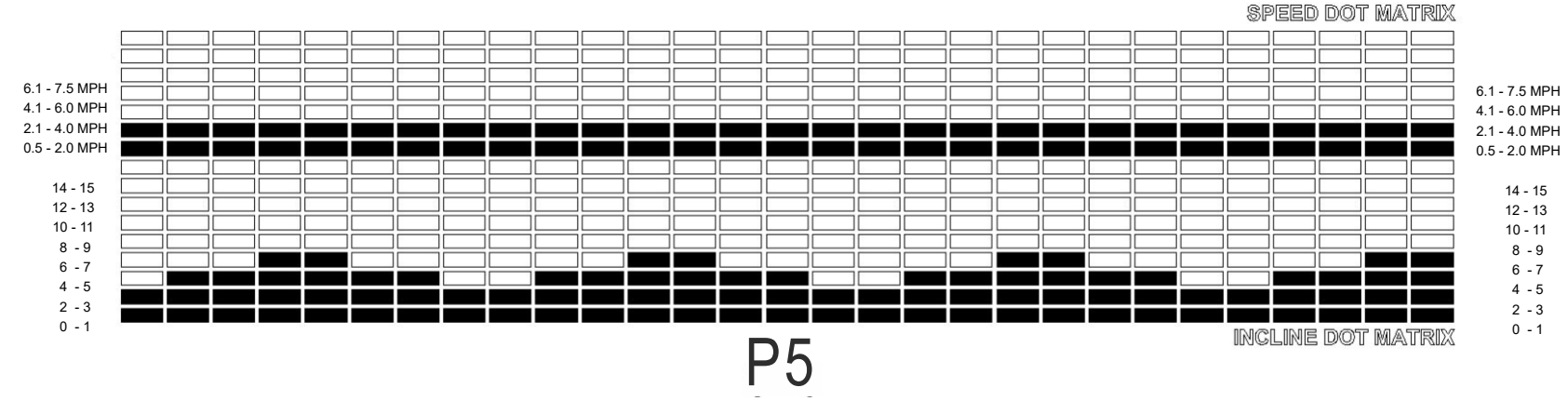

P5

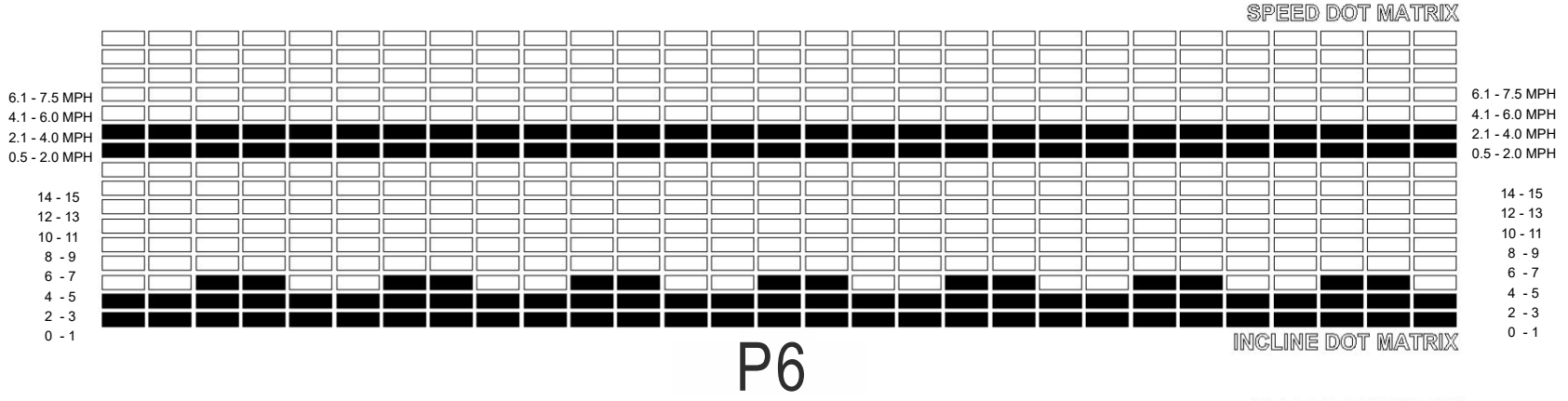

P6

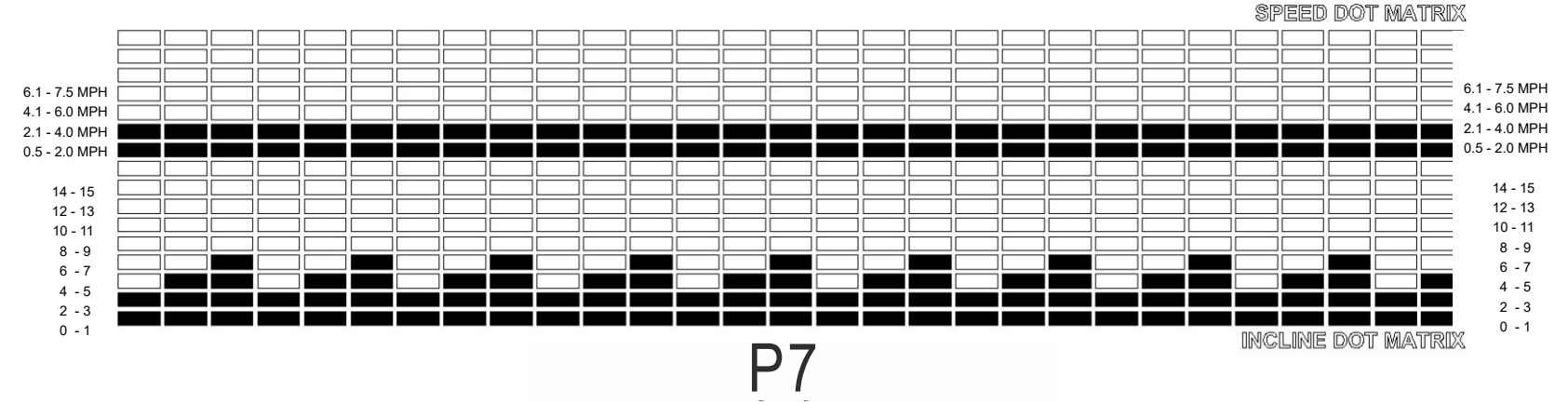

P7

PRESET PROGRAMS

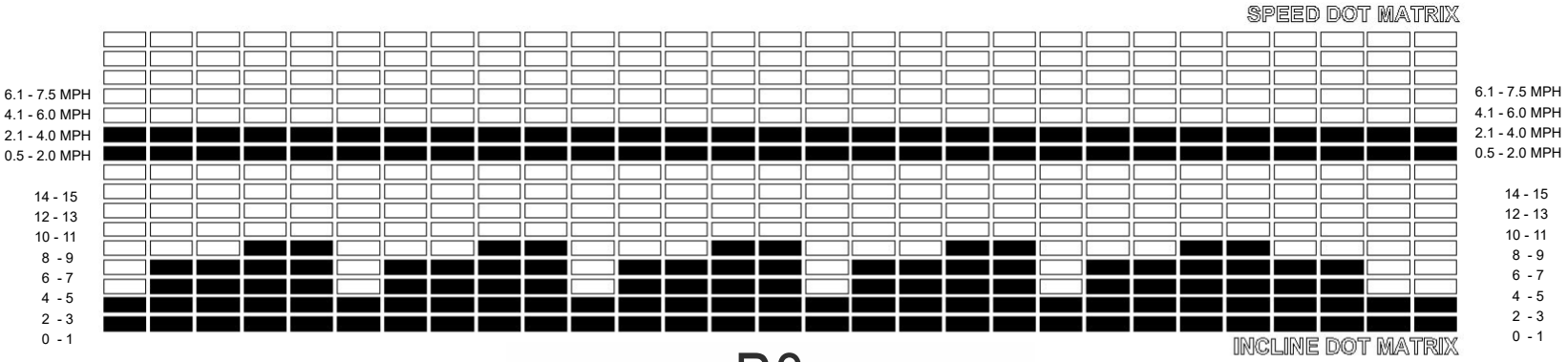

PRESET PROGRAMS

Speed	P5		P6		P7		P8	
Level 1	Speed	Incline	Speed	Incline	Speed	Incline	Speed	Incline
Interval 1	4.0 MPH	Level 2	4.0 MPH	Level 2	4.0 MPH	Level 2	4.0 MPH	Level 2
Interval 2	4.0	4	4.0	3	4.0	4	4.0	6
Interval 3	4.0	4	4.0	4	4.0	6	4.0	6
Interval 4	4.0	6	4.0	5	4.0	2	4.0	8
Interval 5	4.0	6	4.0	2	4.0	4	4.0	8
Interval 6	4.0	4	4.0	3	4.0	6	4.0	3
Interval 7	4.0	4	4.0	4	4.0	2	4.0	6
Interval 8	4.0	2	4.0	5	4.0	4	4.0	6
Interval 9	4.0	2	4.0	2	4.0	6	4.0	8
Interval 10	4.0	4	4.0	3	4.0	2	4.0	8
Interval 11	4.0	4	4.0	4	4.0	4	4.0	3
Interval 12	4.0	6	4.0	5	4.0	6	4.0	6
Interval 13	4.0	6	4.0	2	4.0	2	4.0	6
Interval 14	4.0	4	4.0	3	4.0	4	4.0	8
Interval 15	4.0	4	4.0	4	4.0	6	4.0	8
Interval 16	4.0	2	4.0	5	4.0	2	4.0	3
Interval 17	4.0	2	4.0	2	4.0	4	4.0	6
Interval 18	4.0	4	4.0	3	4.0	6	4.0	6
Interval 19	4.0	4	4.0	4	4.0	2	4.0	8
Interval 20	4.0	6	4.0	5	4.0	4	4.0	8
Interval 21	4.0	6	4.0	2	4.0	6	4.0	3
Interval 22	4.0	4	4.0	3	4.0	2	4.0	6
Interval 23	4.0	4	4.0	4	4.0	4	4.0	6
Interval 24	4.0	2	4.0	5	4.0	6	4.0	8
Interval 25	4.0	2	4.0	2	4.0	2	4.0	8
Interval 26	4.0	4	4.0	3	4.0	4	4.0	6
Interval 27	4.0	4	4.0	4	4.0	6	4.0	6
Interval 28	4.0	6	4.0	5	4.0	2	4.0	3
Interval 29	4.0	6	4.0	2	4.0	4	4.0	3

LEVEL 2 Based on LEVEL 1, but increases 1 level, no change on Speed.
LEVEL 3 Based on LEVEL 2, but increases 1 level, no change on Speed.

PRESET PROGRAMS

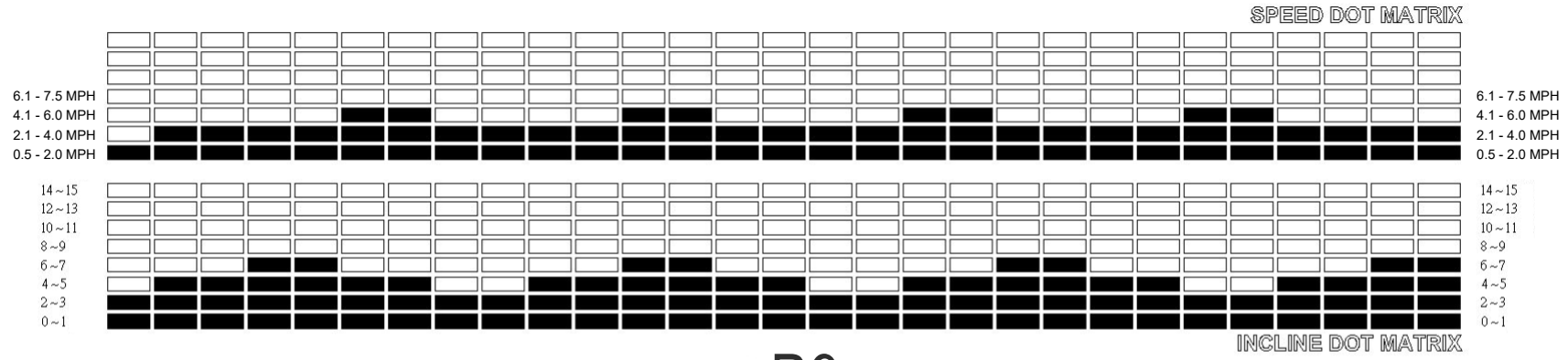

P9

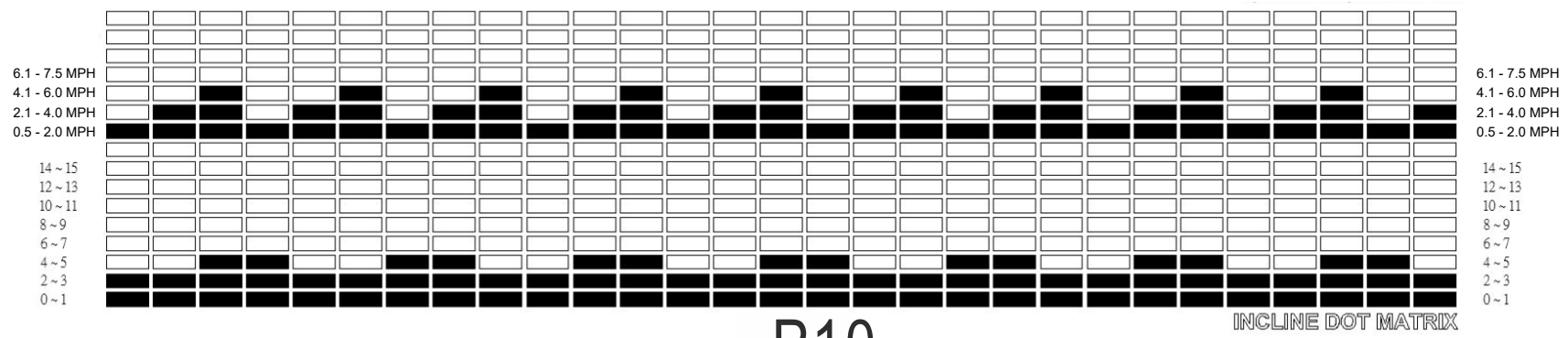

P10

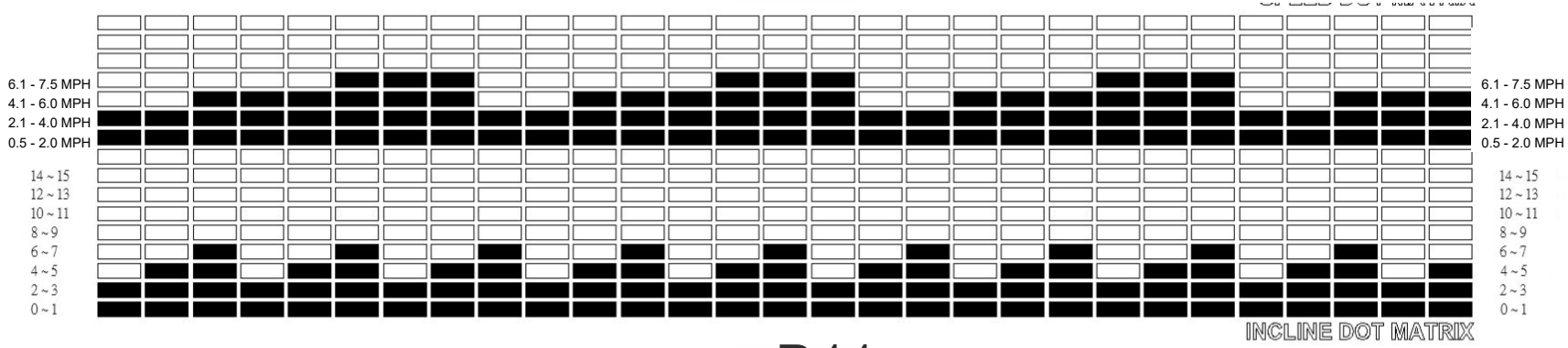

P11

PRESET PROGRAMS

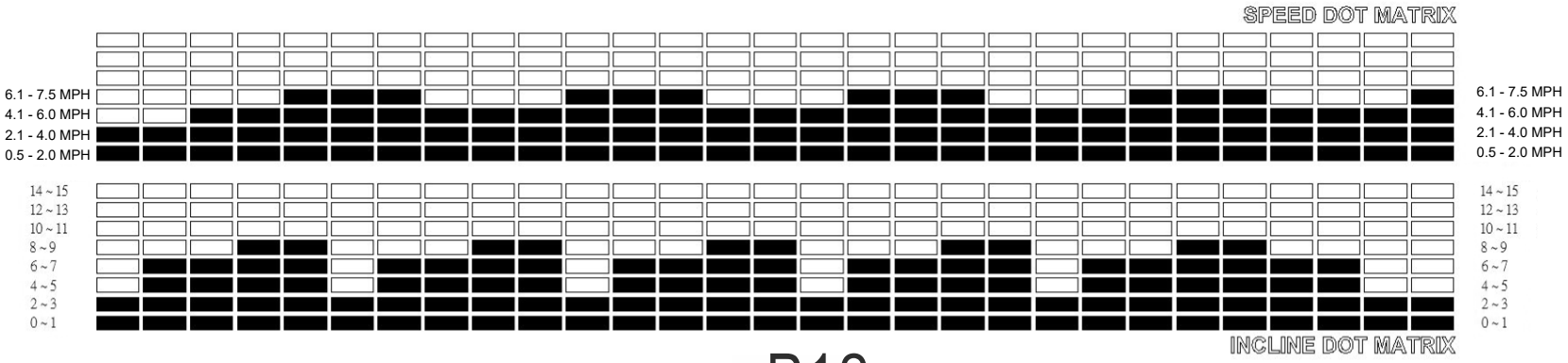

P12

PRESET PROGRAMS

Speed	P9		P10		P11		P12	
Level 1	Speed	Incline	Speed	Incline	Speed	Incline	Speed	Incline
Interval 1	2.0 mph	Level 2	2.0 mph	Level 2	3.0 mph	Level 2	3.0 mph	Level 3
Interval 2	3.0	4	4.0	3	3.0	4	4.0	6
Interval 3	3.0	4	6.0	4	6.0	6	5.0	6
Interval 4	4.0	6	2.0	5	6.0	2	6.0	8
Interval 5	4.0	6	4.0	2	6.0	4	7.0	8
Interval 6	5.0	4	6.0	3	7.5	6	7.5	3
Interval 7	5.0	4	2.0	4	7.5	2	7.0	6
Interval 8	3.0	2	4.0	5	7.5	4	6.0	6
Interval 9	3.0	2	6.0	2	3.0	6	5.0	8
Interval 10	4.0	4	2.0	3	3.0	2	6.0	8
Interval 11	4.0	4	4.0	4	6.0	4	7.0	3
Interval 12	5.0	6	6.0	5	6.0	6	7.5	6
Interval 13	5.0	6	2.0	2	6.0	2	7.0	6
Interval 14	3.0	4	4.0	3	7.5	4	6.0	8
Interval 15	3.0	4	6.0	4	7.5	6	5.0	8
Interval 16	4.0	2	2.0	5	7.5	2	6.0	3
Interval 17	4.0	2	4.0	2	3.0	4	7.0	6
Interval 18	5.0	4	6.0	3	3.0	6	7.5	6
Interval 19	5.0	4	2.0	4	6.0	2	7.0	8
Interval 20	3.0	6	4.0	5	6.0	4	6.0	8
Interval 21	3.0	6	6.0	2	6.0	6	5.0	3
Interval 22	4.0	4	2.0	3	7.5	2	6.0	6
Interval 23	4.0	4	4.0	4	7.5	4	7.0	6
Interval 24	5.0	2	6.0	5	7.5	6	7.5	8
Interval 25	5.0	2	2.0	2	3.0	2	7.0	8
Interval 26	3.0	4	4.0	3	3.0	4	6.0	6
Interval 27	3.0	4	6.0	4	6.0	6	5.0	6
Interval 28	4.0	6	2.0	5	6.0	2	6.0	3
Interval 29	4.0	6	4.0	2	6.0	4	7.0	3

LEVEL 2 Based on LEVEL 1, but increases 1 level and 2.0 MPH.
LEVEL 3 Based on LEVEL 2, but increases 1 level and 2.0 MPH.

PRESET PROGRAMS - CLIMBING MODE

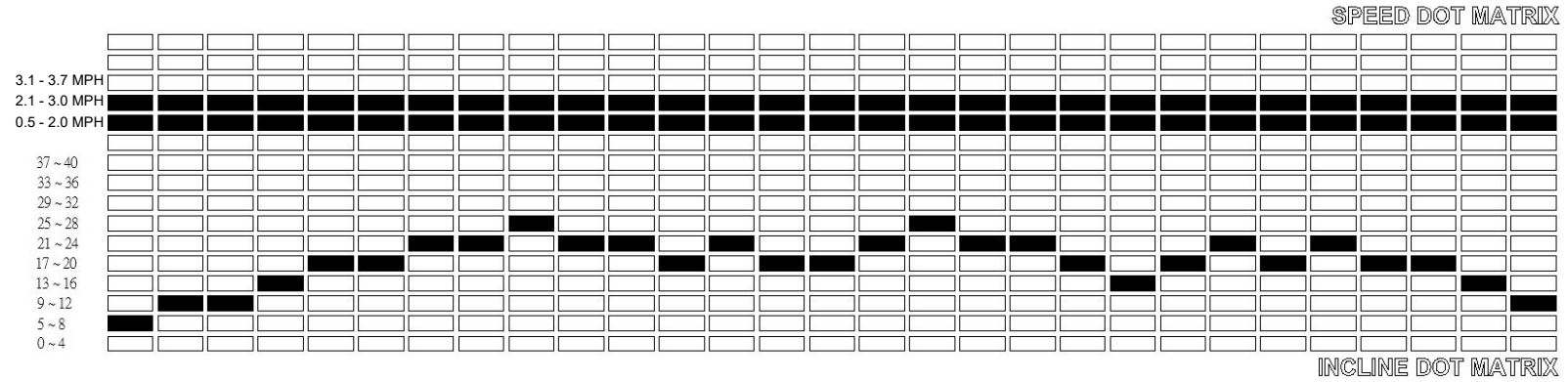

P1

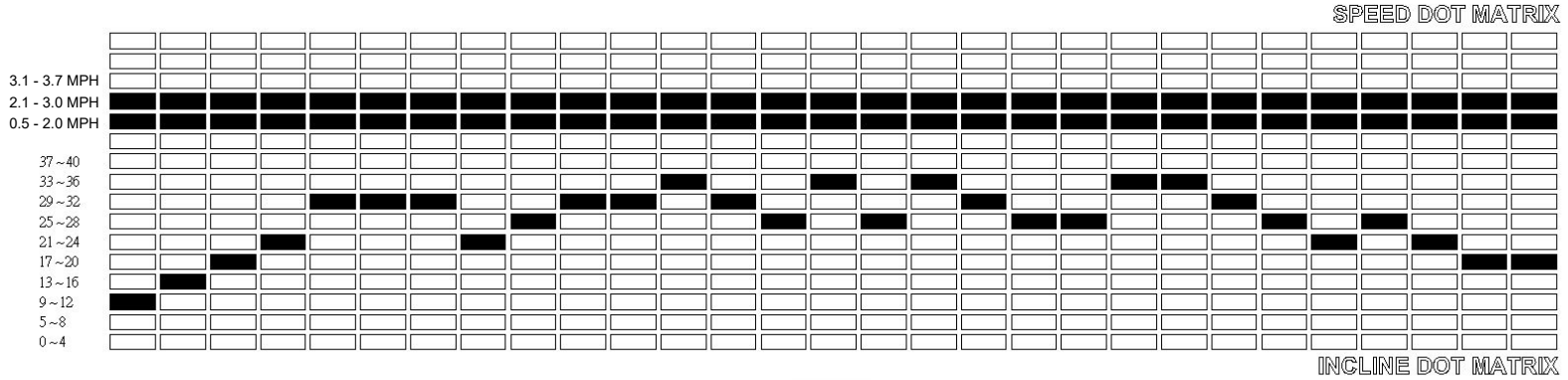

P2

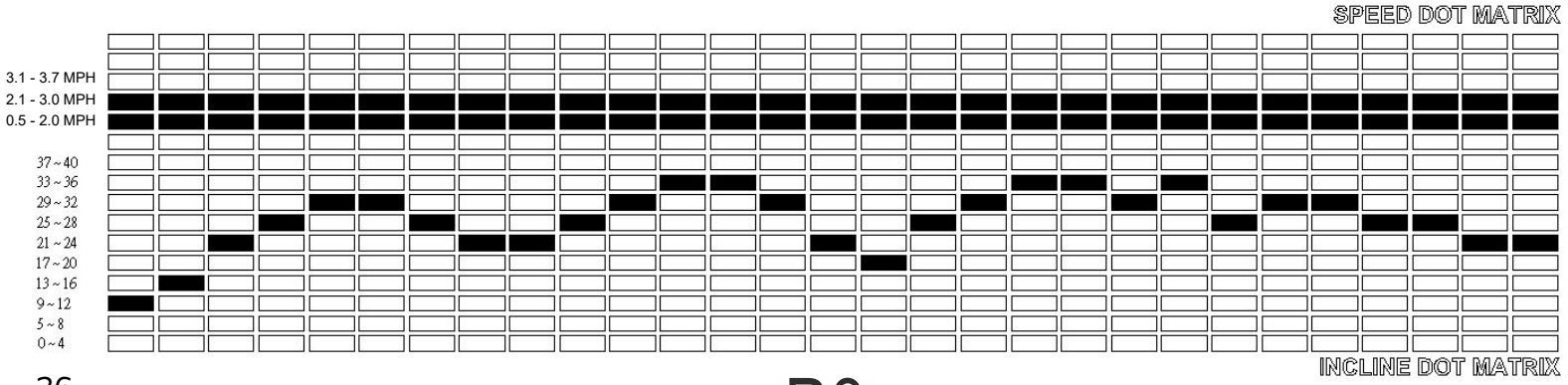

P3

36

PRESET PROGRAMS

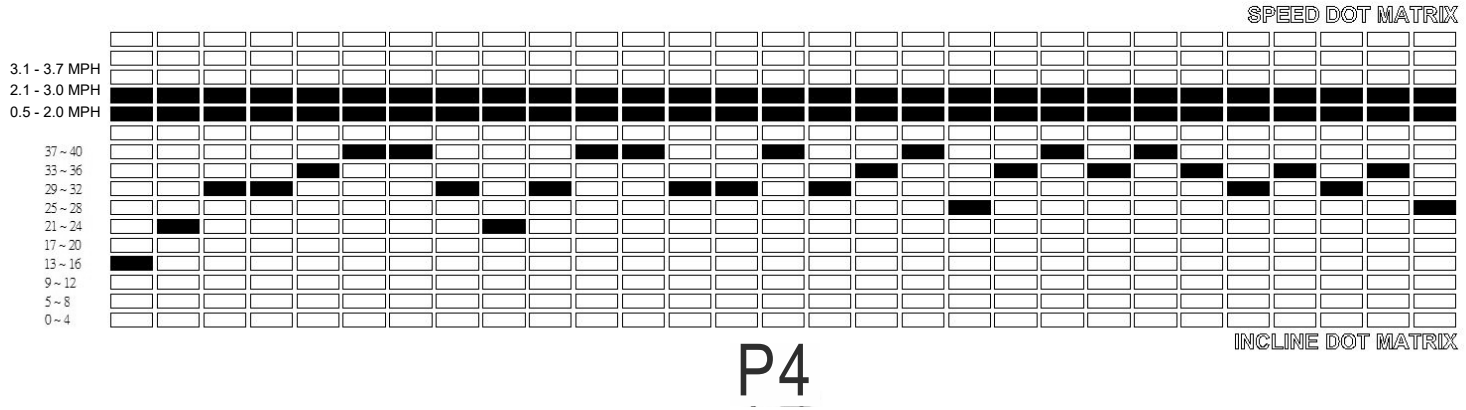

P4

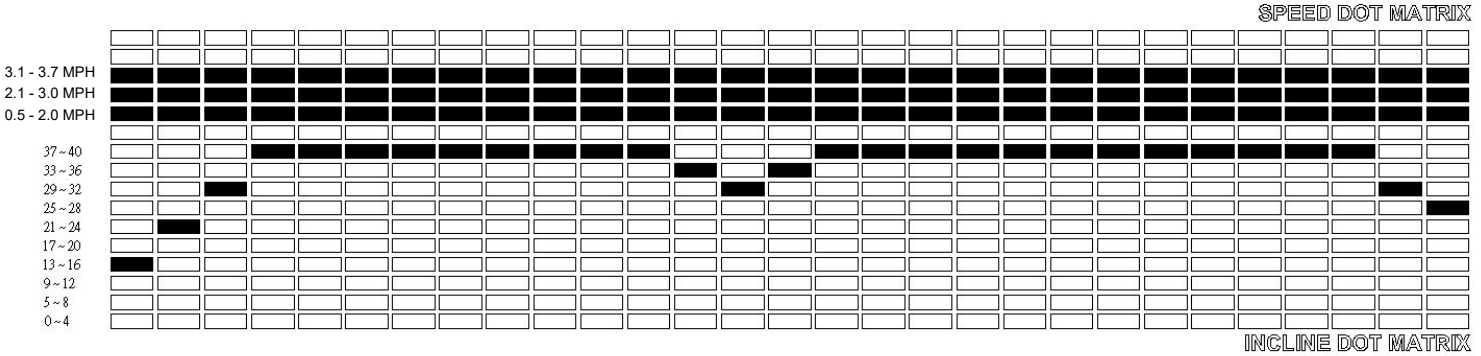

P5

PRESET PROGRAMS

Speed	P1		P2		P3		P4		P5	
Level 1	Speed	Incline	Speed	Incline	Speed	Incline	Speed	Incline	Speed	Incline
Interval 1	3.0 MPH	Level 8	3.0 MPH	Level 10	3.0 MPH	Level 12	3.0 MPH	Level 15	3.7 MPH	Level 15
Interval 2	3.0	10	3.0	15	3.0	14	3.0	22	3.7	23
Interval 3	3.0	11	3.0	18	3.0	23	3.0	30	3.7	30
Interval 4	3.0	15	3.0	22	3.0	27	3.0	30	3.7	40
Interval 5	3.0	18	3.0	29	3.0	30	3.0	35	3.7	40
Interval 6	3.0	20	3.0	30	3.0	31	3.0	38	3.7	40
Interval 7	3.0	22	3.0	31	3.0	28	3.0	38	3.7	40
Interval 8	3.0	23	3.0	24	3.0	23	3.0	28	3.7	40
Interval 9	3.0	25	3.0	26	3.0	24	3.0	24	3.7	40
Interval 10	3.0	24	3.0	29	3.0	26	3.0	30	3.7	40
Interval 11	3.0	23	3.0	32	3.0	30	3.0	38	3.7	40
Interval 12	3.0	20	3.0	35	3.0	34	3.0	38	3.7	40
Interval 13	3.0	21	3.0	32	3.0	35	3.0	30	3.7	35
Interval 14	3.0	17	3.0	28	3.0	32	3.0	30	3.7	30
Interval 15	3.0	19	3.0	34	3.0	22	3.0	38	3.7	35
Interval 16	3.0	23	3.0	32	3.0	20	3.0	32	3.7	40
Interval 17	3.0	25	3.0	26	3.0	25	3.0	35	3.7	40
Interval 18	3.0	24	3.0	26	3.0	29	3.0	39	3.7	40
Interval 19	3.0	23	3.0	33	3.0	35	3.0	28	3.7	40
Interval 20	3.0	20	3.0	31	3.0	35	3.0	36	3.7	40
Interval 21	3.0	16	3.0	30	3.0	32	3.0	40	3.7	40
Interval 22	3.0	18	3.0	25	3.0	33	3.0	33	3.7	40
Interval 23	3.0	21	3.0	22	3.0	28	3.0	37	3.7	40
Interval 24	3.0	18	3.0	25	3.0	29	3.0	33	3.7	40
Interval 25	3.0	21	3.0	22	3.0	29	3.0	29	3.7	40
Interval 26	3.0	18	3.0	25	3.0	27	3.0	35	3.7	40
Interval 27	3.0	17	3.0	23	3.0	26	3.0	29	3.7	40
Interval 28	3.0	13	3.0	20	3.0	24	3.0	35	3.7	30
Interval 29	3.0	10	3.0	17	3.0	22	3.0	25	3.7	25

HEART RATE CHEST STRAP* (NOT INCLUDED)

1. Attach the transmitter to the elastic strap using the interlocking key.
2. Adjust the strap as tightly as possible as long as the strap is not too tight to remain comfortable.
3. Position the transmitter with the logo centered in the middle of your torso facing away from your chest (some people must position the transmitter slightly left of center). Attach the final end of the elastic strap by inserting the round end and, using the locking parts, secure the transmitter and strap around your chest.
4. Position the transmitter directly below the pectoral muscles.
5. Sweat is the best conductor to measure very minute heart beat electrical signals. However, plain water can also be used to pre-wet the electrodes (2 ribbed oval areas on the reverse side of the belt and both sides of the transmitter). It's also recommended that you wear the transmitter strap a few minutes before your work out. Some users, because of body chemistry, have a more difficult time in achieving a strong, steady signal at the beginning. After "warming up", this problem lessens.
6. Your workout must be within range - distance between transmitter/receiver – to achieve a strong steady signal. The length of range may vary somewhat but generally stay close enough to the console to maintain good, strong, reliable readings. Wearing the transmitter directly on bare skin assures you of proper operation. If you wish, you may wear the transmitter over a shirt. To do so, wet the areas of the shirt that the electrodes will rest upon.

Note: The transmitter is automatically activated when it detects activity from the user's heart. Additionally, it automatically deactivates when it does not receive any activity. Although the transmitter is water resistant, moisture can have the effect of creating false signals, so you should take precautions to completely dry the transmitter after use to prolong battery life (estimated transmitter battery life is 2500 hours). The replacement battery is Panasonic CR2032.

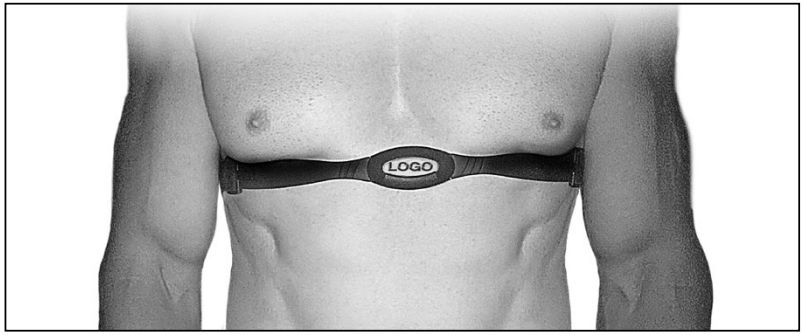

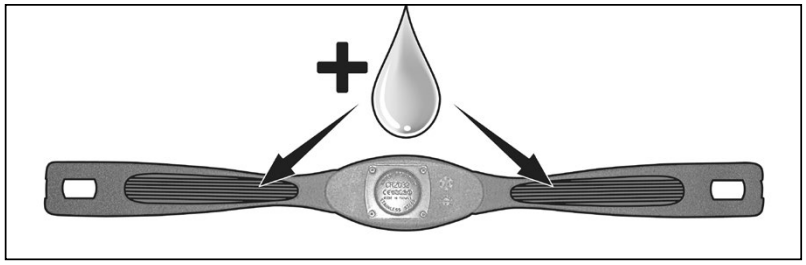

HEART RATE EXERTION

The old motto, “no pain, no gain”, is a myth that has been overpowered by the benefits of exercising comfortably. A great deal of this success has been promoted by the use of heart rate monitors. With the proper use of a heart rate monitor, many people find that their usual choice of exercise intensity was either too high or too low and exercise is much more enjoyable by maintaining their heart rate in the desired benefit range.

To determine the benefit range in which you wish to train, you must first determine your Maximum Heart Rate. This can be accomplished by using the following formula: 220 minus your age. This will give you the Maximum Heart Rate (MHR)for someone of your age. To determine the effective heart rate range for specific goals you simply calculate a percentage of your MHR. Your Heart rate training zone is 50% to 90% of your maximum heart rate. 60% of your MHR is the recommended for burning fat while 80% is recommended for strengthening the cardio vascular system. This 60% to 80% is the zone to stay in for maximum benefit.

For someone who is 40 years old their
target heart rate zone is calculated:
220 – 40 = 180 (maximum heart rate)
180 x .6 = 108 beats per minute (60% of maximum)
180 X .8 = 144 beats per minute (80% of maximum)
So for a 40 year old the training zone would
be 108 to 144 beats per minute.

If you enter your age during programming the console will perform this calculation automatically. Entering your age is used for the Heart Rate programs. After calculating your MHR you can decide upon which goal you would like to pursue.

The two most popular reasons for, or goals, of exercise are cardiovascular fitness (training for the heart and lungs) and weight control. The black columns on the chart represent the MHR for a person whose age is listed at the bottom of each column. The training heart rate, for either cardiovascular fitness or weight loss, is represented by two different lines that cut diagonally through the chart. A definition of the lines’ goal is in the bottom left-hand corner of the chart. If your goal is cardiovascular fitness or if it is weight loss, it can be achieved by training at 80% or 60%, respectively, of your MHR on a schedule approved by your physician. Consult your physician before participating in any exercise program.

With this Spirit Fitness unit you may use the heart rate monitor feature without using the Heart Rate program. However, when using the heart rate monitor feature in conjunction with the Heart Rate programs, the machine will automatically adjust speed or incline to maintain the desired heart rate.

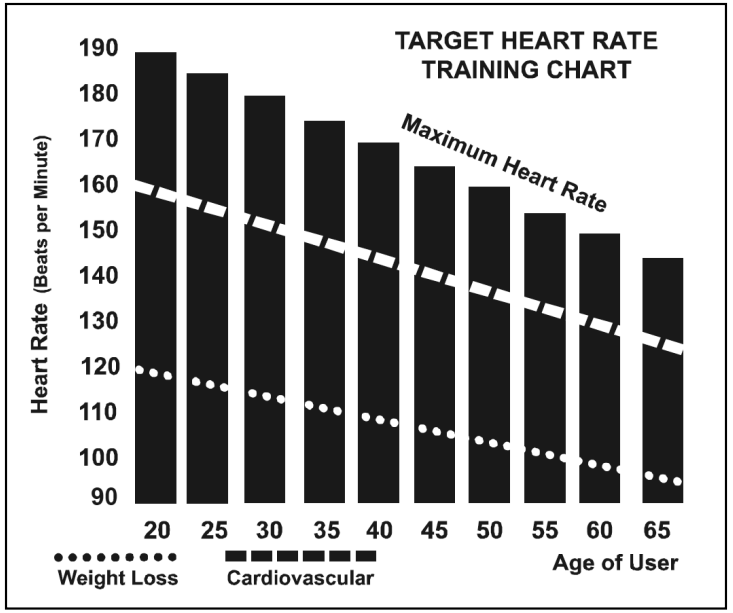

HEART RATE - PERCEIVED EXERTION

Heart rate is important but listening to your body also has a lot of advantages. There are more variables involved in how hard you should workout than just heart rate. Your stress level, physical health, emotional health, temperature, humidity, the time of day, the last time you ate and what you ate all contribute to the intensity at which you should workout. If you listen to your body it will tell you all of these things.

The rate of perceived exertion (RPE), also known as the Borg scale, was developed by Swedish physiologist G.A.V. Borg.
This scale rates exercise intensity from 6 to 20 depending upon how you feel or the perception of your effort.
The scale is as follows:

Rating Perception of Effort

6	Minimal
7	Very, Very Light
8	Very, Very Light +
9	Very Light
10	Very Light +
11	Fairly Light
12	Comfortable
13	Somewhat Hard
14	Somewhat Hard +
15	Hard
16	Hard +
17	Very Hard
18	Very Hard +
19	Very, Very Hard
20	Maximal

You can get an approximate heart rate level for each rating by simply adding a zero to each rating. For example a rating of 12 will result in an approximate heart rate of 120 beats per minute. Your RPE will vary depending on the factors discussed earlier. If your body is strong and rested, you will feel strong and your pace will feel comfortable. When your body is in this condition, you are able to train harder and the RPE will support this. If you are feeling tired and sluggish, it is because your body needs a break. In this condition, your pace will feel difficult. Again, this will show up in your RPE and you will train at the proper level for that day.

MAINTENANCE & CARE

Post-Workout Machine Care

1. Use a slightly damp cloth to clean areas where sweat or oil made contact with the machine.
2. Use a microfiber cloth to clean the display and remove unwanted oils and other things that may damage the screen.
3. Avoid leaving paper or other small debris in the cupholders.

General Cleaning

Dirt, dust, and hair can block air inlets and accumulate on the running belt. Please vacuum underneath your unit on a monthly basis to prevent excess build-up of dirt that can get sucked up and get into the inner workings under the motor cover. Every other month, you should remove the motor cover and carefully vacuum out dirt and hair that may accumulate.

UNPLUG THE POWER CORD BEFORE THIS TASK.

Sanitizing Your XTERRA Fitness Equipment

- Unupholstered high-contact surfaces (hard plastics) can be sanitized using a 75% isopropyl alcohol solution and a clean, dry cloth. Spray surfaces to be sanitized, and use the dry cloth to wipe clean. Allow surfaces to dry before using.
- For upholstered or soft-plastic surfaces, use a conditioner after sanitizing. Be sure to follow the instructions provided by the conditioner manufacturer to ensure proper use of the conditioner.
- Alternatively, you can make your own spray by mixing the proper ratio of isopropyl alcohol and distilled water to reach a 75% solution.

MAINTENANCE & CARE - CONTINUED

Aligning the Running Belt

Ensure the running belt is centered on your treadmill at all times . Running style and Non-level surface are two instances which may cause the belt to drift off center .
Minor adjustments to the two bolts at the rear of the treadmill are necessary when the belt has drifted off center . See fig . A & B .

1. Press the Power Switch (located at the front of the treadmill) to ON position and ensure Safety Key is properly placed onto the computer console, press the START button to begin running, then increase the treadmill's speed to 2 MPH .
2. Stand right behind the treadmill and to determine which side the belt is drifting .
3. If the belt drifts to the right, turn the right adjustment bolt one-quarter of a turn clockwise and the left adjustment bolt one-quarter counter clockwise (See Fig . A) .
4. If the belt drifts to the left, turn the left adjustment bolt one-quarter of a turn clockwise and turn the right adjustment bolt one-quarter turn counter-clockwise (See Fig . B) .
5. Observe the tracking of the belt for about two minutes . Repeat Steps 3, 4, and 5 as needed .

DO NOT OVERTIGHTEN – Over tightening will cause belt damage and premature bearing failure. If you tighten the belt a lot and it still slips, the problem could actually be the drive belt - located under the motor cover - that connects the motor to the front roller. If that belt is loose it feels similar to the walking belt being loose. Tightening the motor belt should be done by a trained service person.

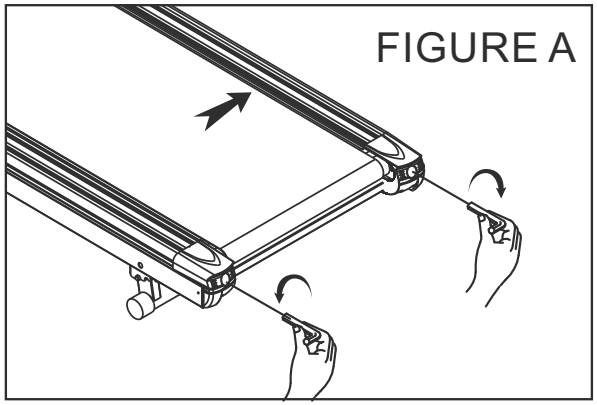

drifts to the right

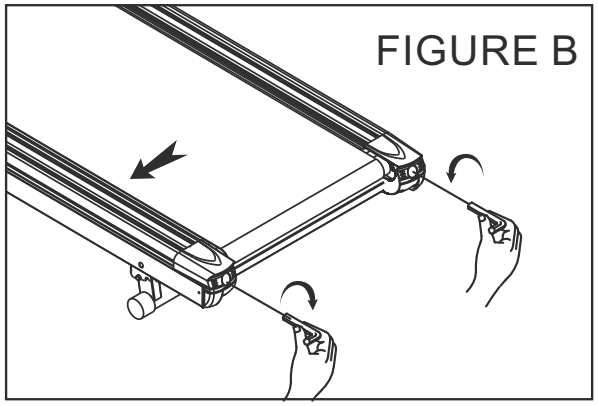

drifts to the left

MAINTENANCE & CARE - CONTINUED

Aligning the Running Belt Tension

Adjust the belt tension if it begins to slip on the rollers . This is important as it increased the longevity of the treadmills components .

Before adjusting belt tension, keep the belt loose

1. Turn the MASTER POWER SWITCH to the ON position and make sure safety key is pressed in.
2. Press START button to start running the belt, then increase speed to 2 MPH .
3. Turn both adjustment screws an equal amount, approximately one-quarter turn clockwise .
4. Slow the belt by holding onto the handrails and applying more weights as you walk, (as if you are walking downhill) . Then stepping heavily on the belt to see if the belt slips .
5. If the belt slips, adjust one-quarter turn clockwise and repeat STEP 4 if necessary .

   ALWAYS BE CAREFUL NOT TO OVERTIGHTEN THE RUNNING BELT.

MAINTENANCE & CARE - CONTINUED

Item	Daily (Before Use)	Daily (After Use)	Weekly	Monthly	3 Months	6 Months
Entire Machine	Examine if the frame is stable for exercise. Adjust balancer to make it stably positioned on the ground.	Use dry cloth to wipe and clear sweat and dust on the surface of machine.		Use damp cloth to clean. (Do not use Solubility Cleaners.) Use water for plastic parts. Use silicone oil or wax for metal parts.		
Location	Assure enough safe space around the machine, and make sure no dangerous objects around.	Use wet cloth to clean the ground. Do not put wax on the ground.	Vacuum dust at the bottom and around the machine.			
Power Cable	Assure power cable is well-plugged and not pressed by the machine.	Turn off the power or unplug power cable.				
Running Belt	Assure no objects on the belt, and run the machine at 2-3 MPH to see if the belt drifts.	Use dry cloth to wipe and clear the surface of running belt.		Use damp cloth to clean (Do not use Solubility Cleaners).		
Running Belt Tension Adjustment	Check if running belt is slipping.					
Lubrication of Running Belt					Use a silicone lubricant to lubricate whenever reaching 112 miles.	
Side Panel				Check if they are well-fixed and make sure no breakdown on the panel.		
Bolt				Check if all bolts are firmly fastened and no rusting.		
The Inside of Motor Cover						Open motor cover and vacuum all dust.
Safety Key	Turn the power on and remove safety key to check if it is in normal function.	Make sure safety key is re-placed on the console.				

DECK LUBRICATION

1. The word of 'LUBE' will flash in every 3 seconds on the console once accumulated running distance reaches 112 MPH to remind user to do the maintenance.
2. Press any button to jump out of the alert mode. Word of 'LUBE will show up again whenever the machine re-starts if the user doesn't eliminate the word by taking action of No. 3 as below.
3. Press " STOP & "SPEED Slow (-)" buttons at the same time to remove the word of 'LUBE', but distance will keep accumulating.

To ensure the longevity and proper function of your Hiker Treadmill, proper belt maintenance is required. You should regularly check between the Hiker Treadmill belt and the top of the Hiker Treadmill base for proper lubrication, and to ensure that no dirt or debris has become trapped. Keeping the deck clean and lubricated at the recommended intervals ensures the longest life possible for your unit. Should lubrication dry out, or dirt become trapped, the friction between the belt and deck increases. Increased friction places undue stress on the drive motor, drive belt, and electronic motor control board which could result in catastrophic failure of these essential, expensive components.

Failure to clean and lubricate the deck at regular intervals may void the warranty.

As a part of your routine maintenance schedule, belt lubrication and cleaning should be performed every 90 days, after 90 hours of use, or earlier if you notice that the deck is dry or dirty. Please also be sure to check belt lubrication before first use.

Do not lubricate with anything other than XTERRA Fitness approved lubricant. Your Hiker Treadmill comes with one tube of Hiker Treadmill belt lubricant.

Extra tubes can be ordered directly from: www.Xterrafitness.com, or by calling our customer service department at (800)258-8511.

To lubricate your Hiker Treadmill belt:

1. Turn the power switch off and unplug the power cord from the wall outlet.
2. Measure 18” from the edge of the motor cover; kneel down and reach under the belt approximately 4-6” from one edge. Squirt a line of lubricant about 1/8” wide x 15” long in an “S” pattern perpendicular to the motor cover.
3. Repeat the process on the opposite side.
4. Plug the electrical cord back into the outlet and turn the power switch on.
5. Walk on the belt at a moderate speed for five minutes to evenly distribute the silicone lube.

Regularly check belt lubrication by completing the following steps:

1. Ensure that your machine is off, and that the power cord is unplugged to minimize risk of injury.
2. Reach between the running belt and the top of the Hiker Treadmill base to verify that lubrication is present.

BELT AND DECK CLEANING

Belt & Deck Cleaning

To clean your Hiker Treadmill belt:

1. Ensure that your machine is off, and that the power cord is unplugged to minimize risk of injury.
2. Grab one edge of the Hiker Treadmill belt, and lift slightly to expose the area between the top of the Hiker Treadmill base and the running belt.
3. Do a visual check for any dirt or debris accumulation.
4. Should dirt and debris be present, slide a towel or cleaning cloth between the Hiker Treadmill belt and top of the Hiker Treadmill base until you can grasp one end on each side. (The cleaning cloth should be longer than the running belt is wide to achieve this.)
5. Using both hands, drag the cleaning cloth up and down the length of the Hiker Treadmill base 1-2 times.
6. For excessive dirt accumulation, rotate the belt halfway, and repeat step 5. Continue until your cleaning cloth is no longer picking up any dirt.
7. Remove cleaning cloth from Hiker Treadmill before plugging back in.

EXPLODED VIEW DIAGRAM

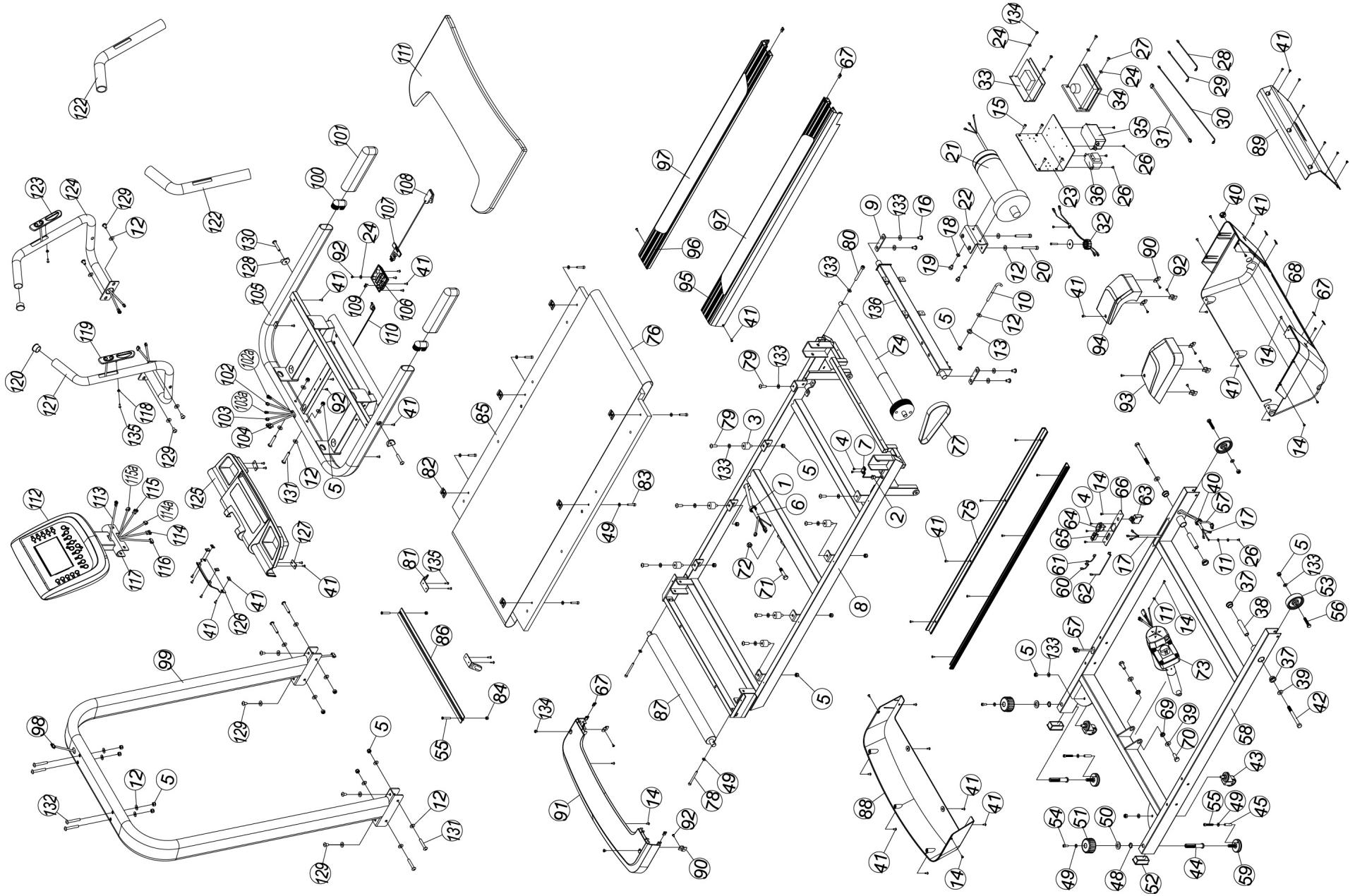

WARRANTY - RESIDENTIAL

Effective January 03, 2024- **TR95H Hiker Treadmill LIMITED WARRANTY**

XTERRA Fitness Inc. warrants all its home use Hiker Treadmill parts for a period of time listed below, from the date of retail sale, as determined by a sales receipt or in the absence of a sales receipt, eighteen (18) months from the original factory shipping date. XTERRA Fitness's responsibilities include providing new or remanufactured parts, at XTERRA Fitness's option, and technical support to our independent dealers and servicing organizations. In the absence of a dealer or service organization, these warranties will be administered by XTERRA Fitness directly to a consumer. The warranty period applies to the following components:

Home Use Limited Warranty

Warranty	Frame	Parts	Labor
Residential	Lifetime	2 Years	1 Year

RESPONSIBILITIES OF THE CONSUMER

This warranty applies only to products in ordinary household use, and the consumer/facility is responsible for the items listed below:

1. Proper use of the Hiker Treadmill in accordance with the instructions provided in this manual
2. Proper installation in accordance with instructions provided with the Hiker Treadmill and with all local electric codes.
3. Expenses for making the Hiker Treadmill accessible for servicing, including any item that was not part of the Hiker Treadmill at the time it was shipped from the factory.
4. Damages to the Hiker Treadmill finish during shipping, installation or following installation.
5. Routine maintenance of this unit as specified in this manual.

WARRANTY - CONTINUED

What is not covered?

EXCLUSIONS

This warranty does not cover the following:

1. CONSEQUENTIAL, COLLATERAL, OR INCIDENTAL DAMAGES SUCH AS PROPERTY DAMAGE AND INCIDENTAL EXPENSES RESULTING FROM ANY BREACH OF THIS WRITTEN OR ANY IMPLIED WARRANTY.
   Note: Some states do not allow the exclusion or limitation of incidental or consequential damages, so this limitation or exclusion may not apply to you.
2. Service call reimbursement to the consumer. Service call reimbursement to the dealer that does not involve malfunction or defects in workmanship or material, for units that are beyond the warranty period, for units that are beyond the service call reimbursement period, for Hiker Treadmill not requiring component replacement, or Hiker Treadmill not in ordinary household or light commercial use.
3. Damages caused by services performed by persons other than authorized XTERRA Fitness service companies; use of parts other than original XTERRA Fitness parts; or external causes such as corrosion, discoloration of paint or plastic, alterations, modifications, abuse, misuse, accident, improper maintenance, inadequate power supply, or acts of God.
4. Products with original serial numbers that have been removed or altered.
5. Products that have been: sold, transferred, bartered, or given to a third party.
6. XTERRA Fitness reserves the right to request proof of purchase if no warranty record exists for the product.
7. THIS WARRANTY IS EXPRESSLY IN LIEU OF ALL OTHER WARRANTIES EXPRESSED OR IMPLIED, INCLUDING THE WARRANTIES OF MERCHANTABILITY AND/OR FITNESS FOR A PARTICULAR PURPOSE.
8. Product use in any environment other than a residential setting or non-dues paying facility with 5 hours use or less per day.
9. Warranties outside of the United States may vary. Please contact your local dealer for details.

Product features or specifications as described or illustrated are subject to change without notice. All warranties are made by XTERRA Fitness, Inc. This warranty applies only in the 48 contiguous United States. NOTE: This does not include Alaska or Hawaii.

WARRANTY - CONTINUED

Responsibilities of the Owner

SERVICE

Keep your bill of sale. Twelve (12) months from the date on the bill of sale or eighteen (18) months from the date of factory shipping as determined by the serial number establishes the labor warranty period should service be required. If service is performed, it is in your best interest to obtain and keep all receipts. This written warranty gives you specific legal rights. You may also have other rights that vary from state to state. Service under this warranty must be obtained by following these steps, in order:

1. Contact your selling authorized XTERRA Fitness dealer. OR
2. Contact your local authorized XTERRA Fitness service organization.
3. If there is a question as to where to obtain service, contact our service department at (870) 935-1107.
4. XTERRA Fitness' obligation under this warranty is limited to repairing or replacing, at XTERRA Fitness' option, the product through one of our authorized service centers. All repairs must be preauthorized by XTERRA Fitness. If the product is shipped to a service center freight charges to and from the service center will be the customer's responsibility. For replacement parts shipped while the product is under warranty, the customer will be responsible for shipping and handling charges. For in-home service, the customer will be responsible for a trip charge. There will be an additional trip charge if the customer is located over 100 miles from the nearest service center.
5. The owner is responsible for adequate packaging upon return to XTERRA Fitness. XTERRA Fitness is not responsible for damages in shipping. Make all freight damage claims with the appropriate freight carrier. DO NOT SHIP ANY UNIT TO OUR FACTORY WITHOUT A RETURN AUTHORIZATION NUMBER. All units arriving without a return authorization number will be refused.

For any further information, or to contact our service department by mail, send your correspondence to:

XTERRA Fitness, Inc.

P.O. Box 2037

Jonesboro, AR 72402-2037

Product features or specifications as described or illustrated are subject to change without notice. All warranties are made by XTERRA Fitness, Inc. This warranty applies only in the 48 contiguous United States. NOTE: This does not apply to Alaska or Hawaii.

TROUBLESHOOTING

- E1 (Error 1): When the machine starts but computer could not read the signal from sensor for 7 seconds, E1 will be shown on the computer.

- E6 (Error 6): When the machine starts but computer could not read the VR signal from incline motor for 6 seconds, E6 will be shown on the computer. If any above trouble happens, please consult the distributor.

- E3 (Error 3): E3 shows when the cable from computer and control box is not well-connected or damaged. If the cable works well, check if the computer or control box is damaged.

- SMELL: If any smell comes out from motor, please firstly spray out some silicone on the running board (Please refer to RUNNING BOARD MAINTENANCE), and see if the situation improves. Then consult the distributor for necessary help.

3000 Nestle Road Jonesboro, AR 72401 | Phone: 800-258-8511 | Fax: 870-935-7611

©2023 All Rights Reserved. TR95H Owner's Manual