XTERRA® FITNESS

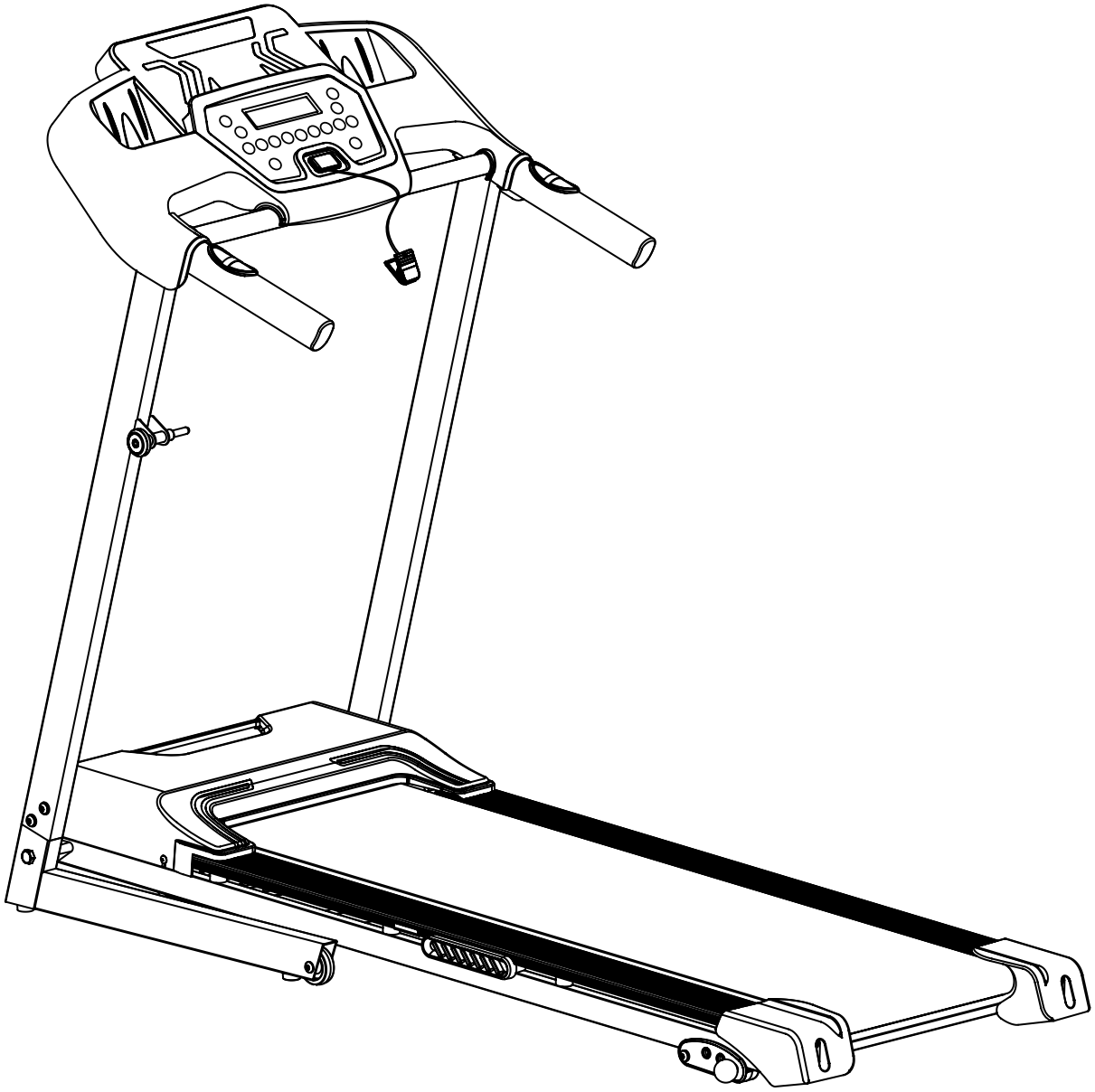

TRX1000 Treadmill

OWNER'S MANUAL

TRX1000_100819_OwnersManual_20251210

PLEASE CAREFULLY READ THIS ENTIRE MANUAL BEFORE OPERATING YOUR NEW TREADMILL

TABLE OF CONTENTS

1 PRODUCT REGISTRATION

4 IMPORTANT SAFETY INSTRUCTIONS

5 IMPORTANT ELECTRICAL INSTRUCTIONS

6 IMPORTANT OPERATION INSTRUCTIONS

7 TRX1000 ASSEMBLY INSTRUCTIONS

12 OPERATION OF YOUR CONSOLE

14 PROGRAMMABLE FEATURES

15 GENERAL MAINTENANCE

18 TROUBLE SHOOTING

19 MANUFACTURER'S LIMITED WARRANTY

ATTENTION
THIS TREADMILL IS INTENDED FOR RESIDENTIAL USE ONLY AND IS WARRANTED FOR THIS APPLICATION. ANY OTHER APPLICATION VOIDS THIS WARRANTY IN ITS ENTIRETY.

PREVENTATIVE MAINTENANCE CHART

Vacuum Under Motor Cover & Check Wiring (Every Other Month)	Clean & Inspect Deck for Lubrication (Every Other Month)	Lubricate Deck (Every 40 hours or sooner if dry)	Inspect Belt Tracking (Monthly) Adjust if necessary	Date

Congratulations On Your New Treadmill and Welcome to the XTERRA Fitness Family!

Thank you for your purchase of this quality treadmill from XTERRA Fitness. Your new treadmill has been manufactured by one of the leading fitness manufacturers in the world and is backed by one of the most comprehensive warranties available. XTERRA Fitness will do all we can to make your ownership experience as pleasant as possible for many years to come. If you have questions, or if parts are missing or damaged, or you require customer service, call (870) 336-4286. Please have your model number and serial number handy when you call.

Please take a moment to record where you purchased your machine, as well as the date of purchase for future reference. We appreciate your confidence in XTERRA Fitness and we will always remember that you are the reason that we are in business. Please complete and mail your registration card today and enjoy your new treadmill.

Yours in Health,

XTERRA Fitness

Purchase Location:

Purchase Date:

RECORD YOUR SERIAL NUMBER

Please record the Serial Number of this fitness product in the space provided below.

Serial Number:

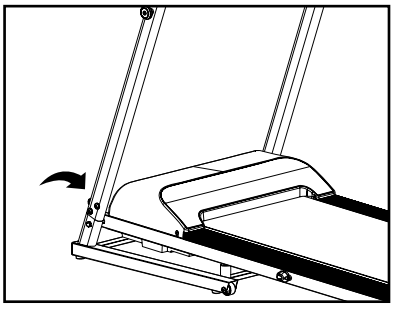

REGISTER YOUR PURCHASE

The self-addressed product registration card must be completed in full and returned to XTERRA Fitness.

IMPORTANT SAFETY INSTRUCTIONS

When using an electrical appliance, basic precautions should always be followed, including the following:
Read all instructions before using this appliance.

DANGER

To reduce the risk of electric shock:
Always unplug this appliance from the electrical outlet immediately after using and before cleaning.

WARNING

To reduce the risk of burns, fire, electric shock, or injury to persons:

- An appliance should never be left unattended when plugged in. Unplug from outlet when not in use, and before putting on or taking off parts.
- Do not operate under blanket or pillow. Excessive heating can occur and cause fire, electric shock, or injury to persons.
- This exercise equipment is not intended for use by persons with reduced physical, sensory or mental capabilities, or lack of experience and knowledge.
- Use this appliance only for its intended use as described in this manual. Do not use attachments not recommended by the manufacturer.
- Never operate this appliance if it has a damaged cord or plug, if it is not working properly, if it has been dropped or damaged, or dropped into water. Return the appliance to a service center for examination and repair.
- Do not carry this appliance by supply cord or use cord as a handle.
- Keep the cord away from heated surfaces.
- Never operate the appliance with the air openings blocked. Keep the air openings free of lint, hair, and the like.
- Never drop or insert any object into any opening.
- Do not use outdoors.
- Do not operate where aerosol (spray) products are being used or where oxygen is being administered.
- Connect this appliance to a properly grounded outlet only.
- The appliance is intended for household use.

WARNING

To reduce the risk of burns, fire, electric shock, or injury to persons, install the treadmill on a flat level surface with access to a 120-volt, 15-amp grounded outlet.

DO NOT USE AN EXTENSION CORD UNLESS IT IS 14AWG OR BETTER, WITH ONLY ONE OUTLET ON THE END. THE TREADMILL SHOULD BE THE ONLY APPLIANCE IN THE CIRCUIT IN WHICH IT IS CONNECTED. DO NOT ATTEMPT TO DISABLE THE GROUNDED PLUG BY USING IMPROPER ADAPTERS, OR IN ANY WAY MODIFY THE CORD SET. A SERIOUS SHOCK OR FIRE HAZARD MAY RESULT ALONG WITH COMPUTER MALFUNCTIONS.



WARNING: This product can expose you to chemicals including Toluene and Acrylamide which are known to the State of California to cause cancer and birth defects or other reproductive harm.
For more information go to www.P65Warnings.ca.gov

FITNESS EQUIPMENT SAFETY INSTRUCTIONS

- To disconnect, turn all controls to the off position, remove tether cord, then remove the plug from the outlet.
- Do not operate equipment on deeply padded, plush or shag carpet. Damage to both carpet and equipment may result
- Before beginning this or any exercise program, consult a physician. This is especially important for persons over the age of 35 or persons with pre-existing health conditions.
- Do not block the rear of the equipment. Provide a minimum of 3 1/2 feet clearance between the rear of the equipment and any fixed object.
- Keep hands away from all moving parts.
- Use handrails provided; they are for your safety.
- Do not attempt to use your equipment for any purpose other than for the purpose it is intended.
- Wear proper shoes. High heels, dress shoes, sandals or bare feet are not suitable for use on your equipment. Quality athletic shoes are recommended to avoid leg fatigue.

Failure to follow all guidelines may compromise the effectiveness of the exercise experience, expose yourself (and possibly others) to injury, and reduce the longevity of the equipment.

SAVE THESE INSTRUCTIONS - THINK SAFETY!

IMPORTANT ELECTRICAL INFORMATION

WARNING

Route the power cord away from any moving part of the treadmill including the elevation mechanism and transport wheels.
NEVER remove any cover without first disconnecting AC power. If voltage varies by ten percent (10%) or more, the performance of your treadmill may be affected. **Such conditions are not covered under your warranty.** If you suspect the voltage is low, contact your local power company or a licensed electrician for proper testing.
NEVER expose this treadmill to rain or moisture. This product is **NOT** designed for use outdoors, near a pool or spa, or in any other high humidity environment. The temperature specification is 40 degrees C, and humidity is 95%, non-condensing (no water drops forming on surfaces).
Circuit breakers: Avoid AFCI/GFCI circuit breakers if possible. These breakers may trip occasionally during exercise because of the high inrush currents of the treadmill drive electronics and motor. This is an issue that affects all treadmill brands. New laws in your area may require these breakers. If you do have these breakers and outlets in your home, and are experiencing nuisance tripping, you should check if there are any other devices plugged into the same circuit. Some examples of devices that may also cause tripping are fluorescent lights with electronic ballasts, coffee maker, space heater, hair drier. Optimally the treadmill should be the only device plugged into the circuit. Our treadmills have surge suppressors built in to help avoid nuisance tripping. We have tested several AFCI/GFCI breakers and outlets with our products. Brands we have tested are: Eaton (Cutler Hammer Series), Leviton (Smart lock pro) and Schneider Electric (Canadian home series). These breakers do not trip in our testing, when connected to our treadmills, as long as no other devices are plugged into the same circuit.

GROUNDING INSTRUCTIONS

This product must be grounded. If the treadmill's electrical system should malfunction or breakdown grounding provides a path of least resistance for electric current, reducing the risk of electric shock. This product is equipped with a cord having an equipment-grounding plug. The plug must be plugged into an appropriate outlet that is properly installed and grounded in accordance with all local codes and ordinances.

DANGER - Improper connection of the equipment-grounding conductor can result in a risk of electric shock. Check with a qualified electrician or serviceman if you are in doubt as to whether the product is properly grounded. Do not modify the plug provided with the product if it will not fit the outlet; have a proper outlet installed by a qualified electrician.

This product is for use on a nominal 120-volt circuit, and has a grounding plug that looks like the plug illustrated below. A temporary adapter that looks like the adapter illustrated below may be used to connect this plug to a 2-pole receptacle as shown below if a properly grounded outlet is not available. The temporary adapter should be used only until a properly grounded outlet, (shown below) can be installed by a qualified electrician. The green colored rigid ear-lug, or the like, extending from the adapter, must be connected to a permanent ground such as a properly grounded outlet box cover. Whenever the adapter is used, it must be held in place by a metal screw.

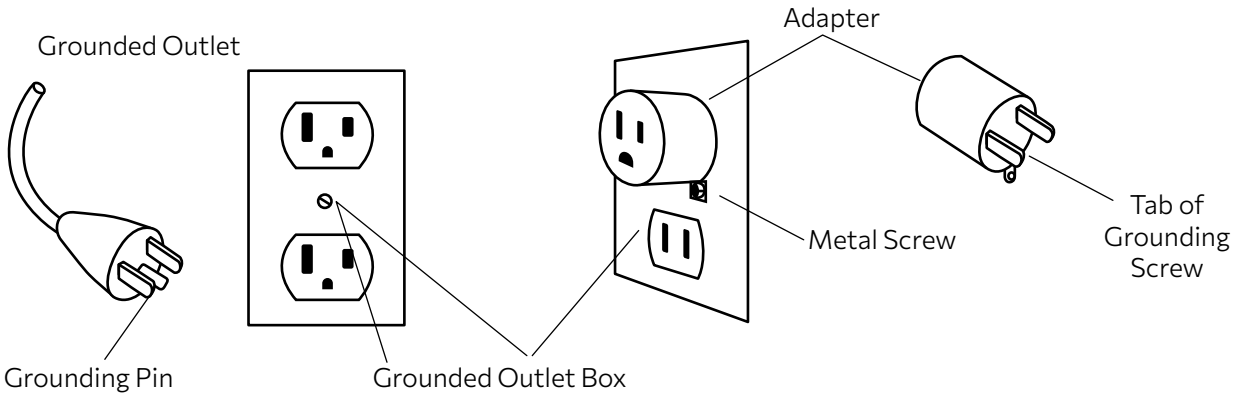

IMPORTANT OPERATION INSTRUCTIONS

- **NEVER** operate this treadmill without reading and completely understanding the results of any operational change you request from the computer.
- Understand that changes in speed and incline do not occur immediately. Set your desired speed on the computer console and release the adjustment key. The computer will obey the command gradually.
- **NEVER** use your treadmill during an electrical storm. Surges may occur in your household power supply that could damage treadmill components.
- Use caution while participating in other activities while walking on your treadmill; such as watching television, reading, etc. These distractions may cause you to lose balance or stray from walking in the center of the belt, which may result in serious injury.
- **NEVER** mount or dismount the treadmill while the belt is moving. XTERRA Fitness treadmills start with at a very low speed and it is unnecessary to straddle the belt during start up. Simply standing on the belt during slow acceleration is proper after you have learned to operate the unit.
- **ALWAYS** hold on to a handrail or hand bar while making control changes (incline, speed, etc.).

SAFETY TETHER CORD

A safety tether cord is provided with this unit. It is a simple magnetic design that should be used at all times. It is for your safety should you fall or move too far back on the tread-belt. Pulling this safety tether cord will stop tread-belt movement.

To Use:

1. Place the magnet into position on the round portion of the console control head. Your treadmill will not start and operate without this. Removing the magnet also secures the treadmill from unauthorized use.
2. Fasten the plastic clip onto your clothing securely to assure good holding power. Note: The magnet has strong enough power to minimize accidental, unexpected stopping. The clip should be attached securely to make certain it does not come off. Be familiar with its function and limitations. The treadmill will stop, depending on speed, with a one to two step coast anytime the magnet is pulled off the console.

REMOVE TETHER CORD AFTER USE TO PREVENT UNAUTHORIZED TREADMILL OPERATION.

TRX1000 ASSEMBLY PACK CHECKLIST

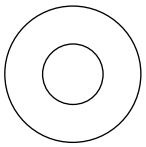

#79 Ø8 x Ø18 x 1.5T
Flat Washer
(6 pcs)

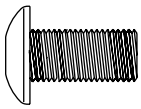

#87 5/16" x 1/2"
Button Head Socket
Bolt (10 pcs)

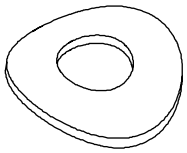

#88 Ø8 x Ø19 x 1.5T
Curved Washer
(4 pcs)

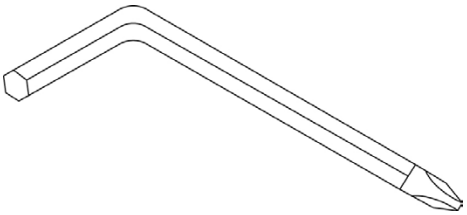

#104 Combination M5 Allen
Wrench & Philips Head Screw
Driver (1 pc)

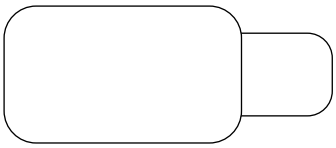

#105 Lubricant
(1 pc)

ASSEMBLY STEP 1

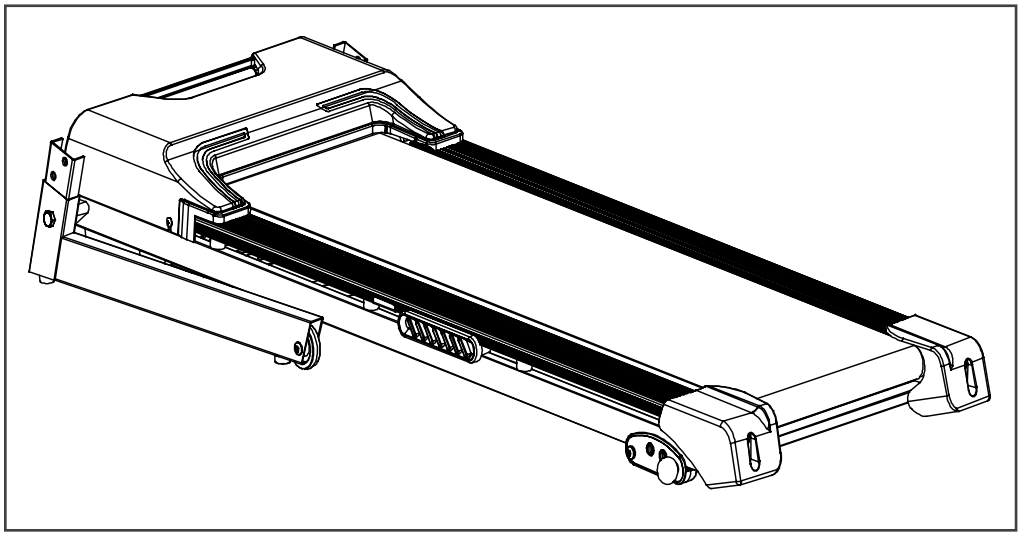

HARDWARE
No Hardware required for this step

1. Remove the UNIT from the box and put it on a flat and level floor.

ASSEMBLY STEP 2

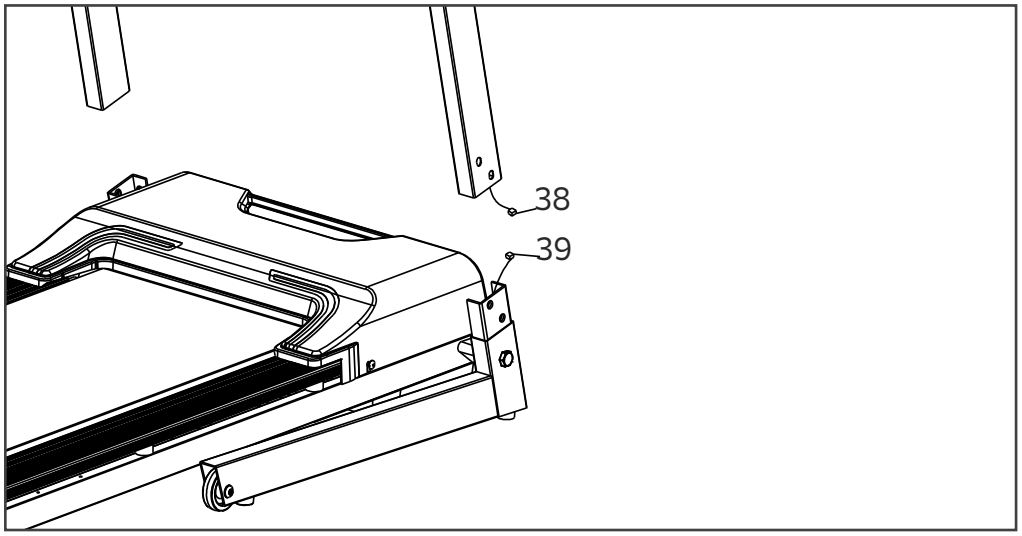

HARDWARE
No Hardware required for this step

NOTE: this step may work better with a second person assisting.

1. Connect the **MIDDLE COMPUTER CABLE (38)** with the **LOWER COMPUTER CABLE (39).**

ASSEMBLY STEP 3

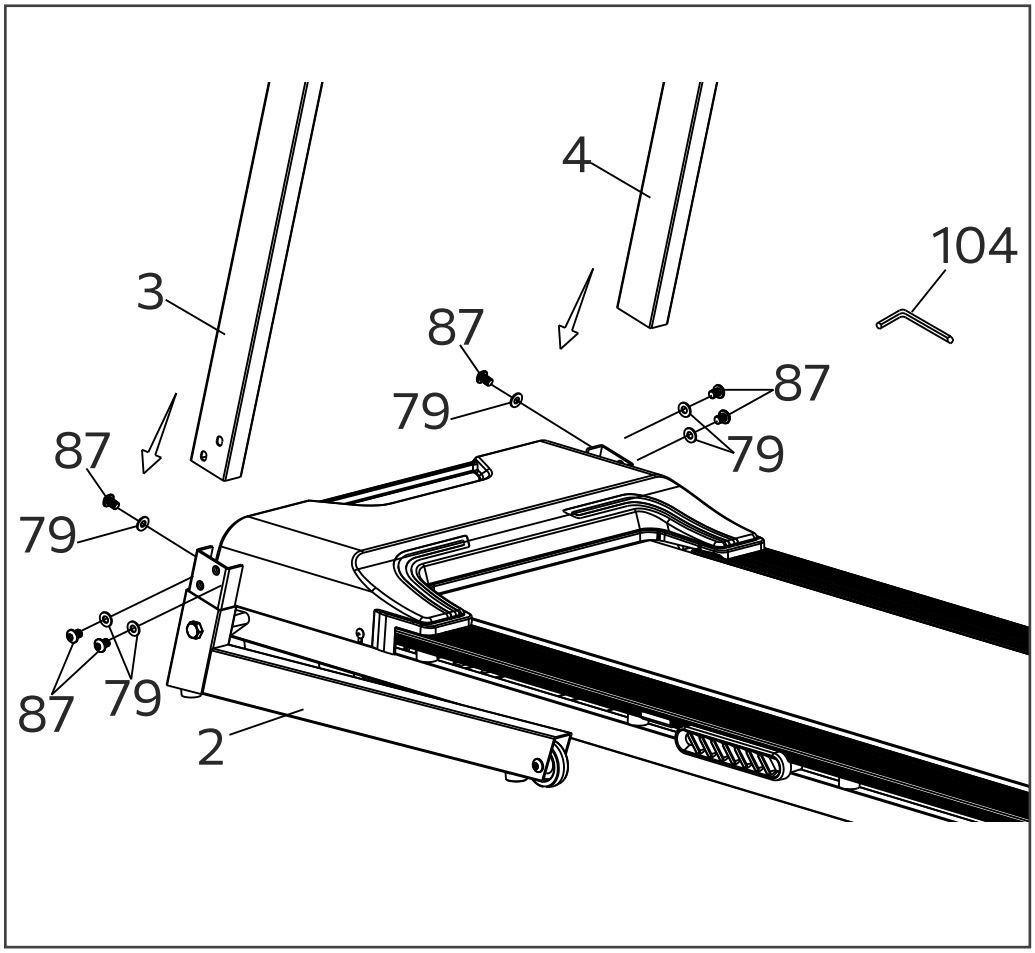

HARDWARE
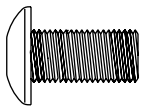 Bolt (87) Qty: 6
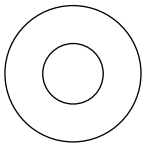 Flat Washer (79) Qty: 6

NOTE: this step may work better with a second person assisting.

1. Insert the **UPRIGHTS (L, R)(3,4)** into the **FRAME BASE (2)** with the 6 **BUTTON HEAD SOCKET BOLTS (87)**, 6 **FLAT WASHERS (79)** by using the **ALLEN WRENCH**. (Please secure the screw without tightening it.)

ASSEMBLY STEP 4

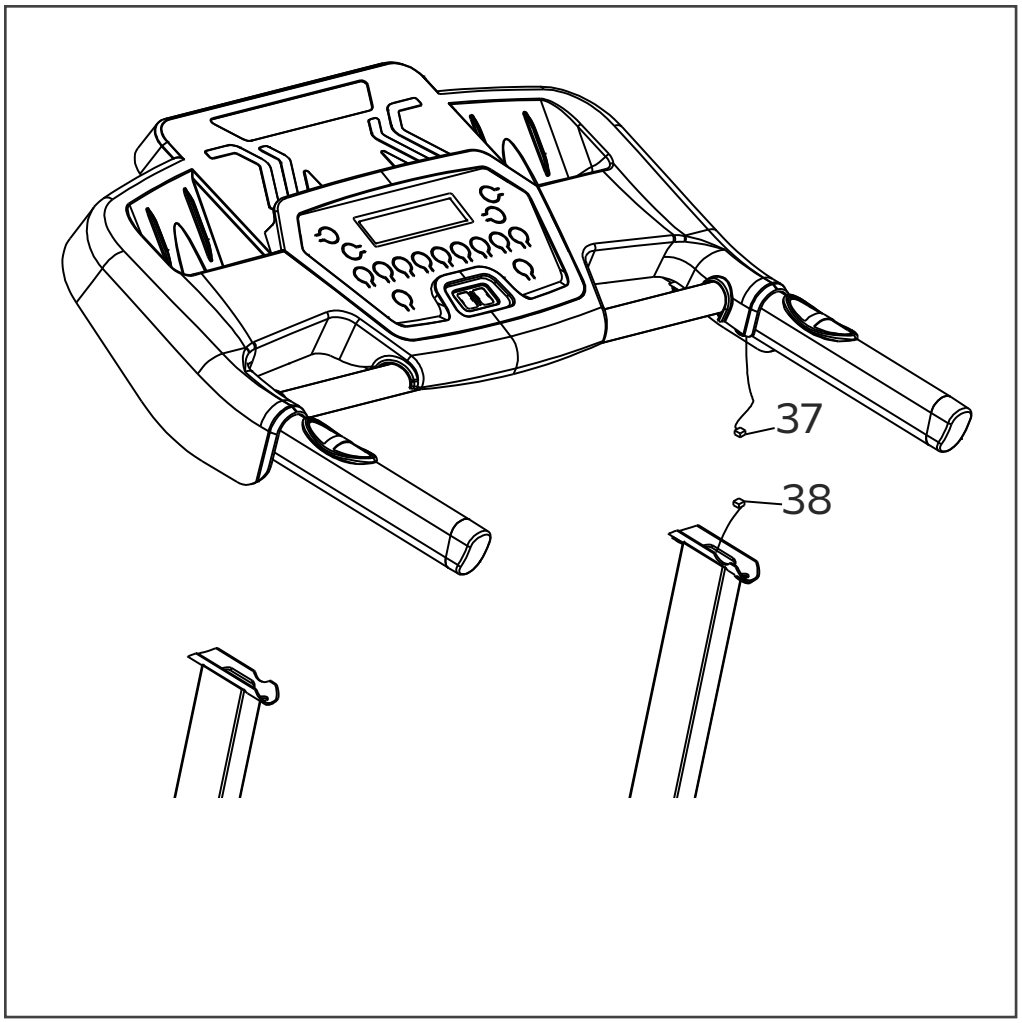

HARDWARE
No Hardware required for this step

NOTE: this step may work better with a second person assisting.

1. Connect the **UPPER COMPUTER CABLE (37)** with the **MIDDLE COMPUTER CABLE (38).**

ASSEMBLY STEP 5

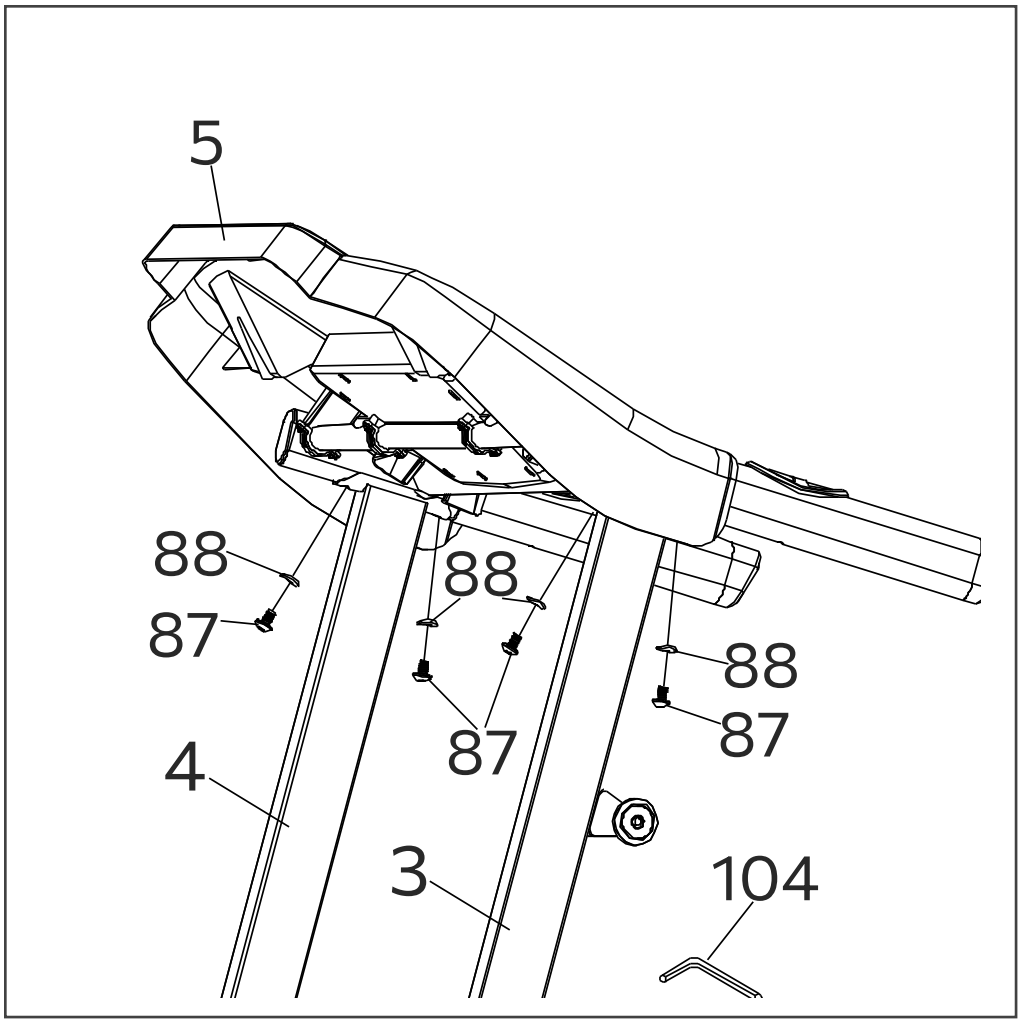

HARDWARE
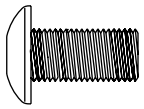 Bolt (87) Qty: 4
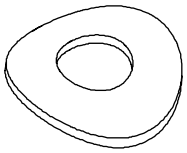 Curved Washer (88) Qty: 4

NOTE: Be careful not to pinch the computer cables when attaching the console.

1. Install the **CONSOLE SUPPORT (5)** onto the **UPRIGHTS (L,R)(4,3)** with the 4 **BUTTON HEAD SOCKET BOLTS (87)** and 4 **CURVED WASHERS (88)** by using the **ALLEN WRENCH.**

NOTE: Please tighten all screws after assembly is complete.

Note: Once your treadmill is fully assembled, be sure to check the belt lubrication before initial use by completing the following steps:

1. Ensure that your machine is off, and that the power cord is unplugged to minimize risk of injury.
2. Use one hand to hold the treadmill belt up just enough so you can use your other hand reach between the belt and deck to verify that lubrication is present.

If lubrication is present, you may continual normal use. If lubrication is not present, please follow the steps on page 16 to lubricate your treadmill belt using approved treadmill belt lubricant.

FOLDING INSTRUCTIONS

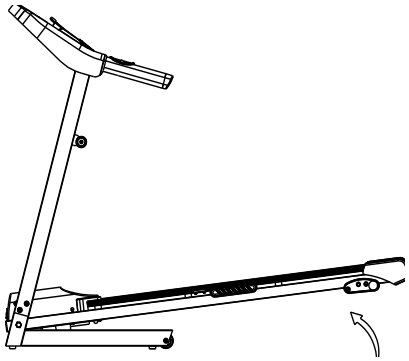

TO FOLD THE TREADMILL

Lift the treadmill running deck until it is secured by the locking mechanism on the left upright tube. You will hear it pop into place when secure.

WARNING: Before unfolding the treadmill, hold the deck with one hand to prevent it from falling and release the knob with your other hand.

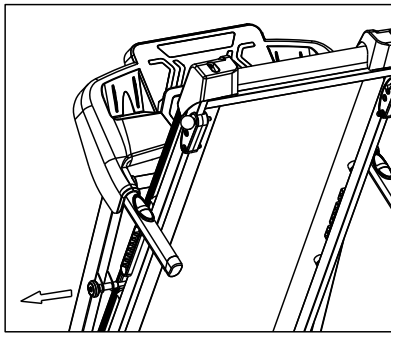

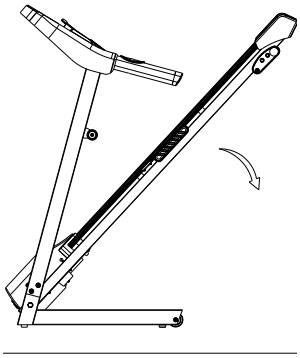

TO UNFOLD THE TREADMILL

Apply slight forward pressure on the treadmill running deck with your right hand. Pull out on the round knob and slowly lower the running deck to the floor.

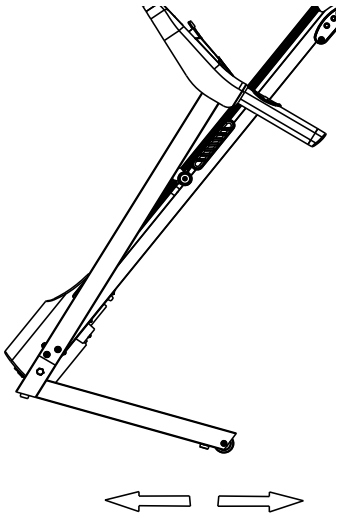

TRANSPORTATION INSTRUCTIONS

The treadmill is equipped with two transport wheels. Fold your Treadmill before moving. Lean the Treadmill back so that the transport wheels touch the floor. You are then free to move the unit.

CAUTION: Do not attempt to move the unit unless it is in the folded and locked position. Remove the power cord from the front of the unit to avoid possible damage. Use both handrails to maneuver the unit to the desired position.

OPERATION OF YOUR TREADMILL

TRX1000 CONSOLE



GETTING STARTED



Power the treadmill on by plugging it into an appropriate wall outlet, then turn on the power switch located at the front of the treadmill below the motor hood. Ensure that the safety key is installed, as the treadmill will not operate without it.

The treadmill will then enter idle mode, which is the starting point for operation.

QUICK-START OPERATION

1. Attach the Safety key to enable the display (if not already on).
2. Press the Start key to begin belt movement. Adjust to the desired speed using the Speed ▲ and ▼ keys. You may also use the SPEED buttons 1 through 9 to adjust the speed.
3. To slow tread-belt press and hold the Speed ▼ key to the desired speed. You may also press the SPEED buttons 1 through 9.
4. To stop the tread-belt press the Stop key or pull away Safety key.

PAUSE/STOP/RESET FEATURE

1. When the treadmill is running the pause feature may be utilized by pressing the red Stop key once. This will slowly decelerate the tread-belt to a stop. The Time, Distance and Calorie readings will hold while the unit is in the pause mode. After five minutes the display will reset and return to the start up screen.
2. To resume your exercise, when in Pause mode, press the Start key. The speed will return to the previous settings.
3. Pause is executed when the Stop key is pressed once. If the Stop key is pressed a second time, the console will reset and return to the idle mode (start up) screen.

INCLINE FEATURE

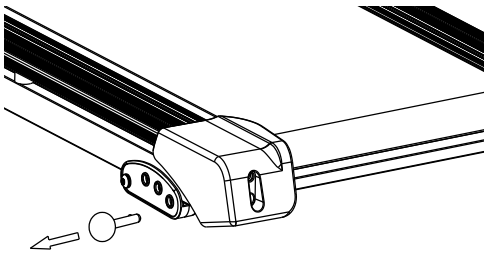

- Incline may be adjusted anytime before belt movement.
- Lift running deck
- Remove the Step Up Frame Pop Pin. Slide the Incline Foot forward until you reach the desired height. Reinsert pin.
- Lower running deck
- Apply to both sides for even incline.

CALORIE DISPLAY

Displays the cumulative calories burned at any given time during you workout.

Note: This is only a rough guide used for comparison of different exercise sessions, which cannot be used for medical purposes.

TO TURN TREADMILL OFF

1. Display will automatically turn off (go to sleep) after 30 minutes (no key operations). The treadmill will draw very little current in sleep mode (about as much as your television when it is turned off).
2. Remove tether cord.
3. Turn off the main switch on the front of the treadmill, below the motor cover.

LUBE MESSAGE

When “Lube” appears on the LCD check lubrication under walking deck. See the instructions on page 17 to add lube as needed. After application hold Program for 3 seconds to reset the message.

PRESET PROGRAM PROFILES

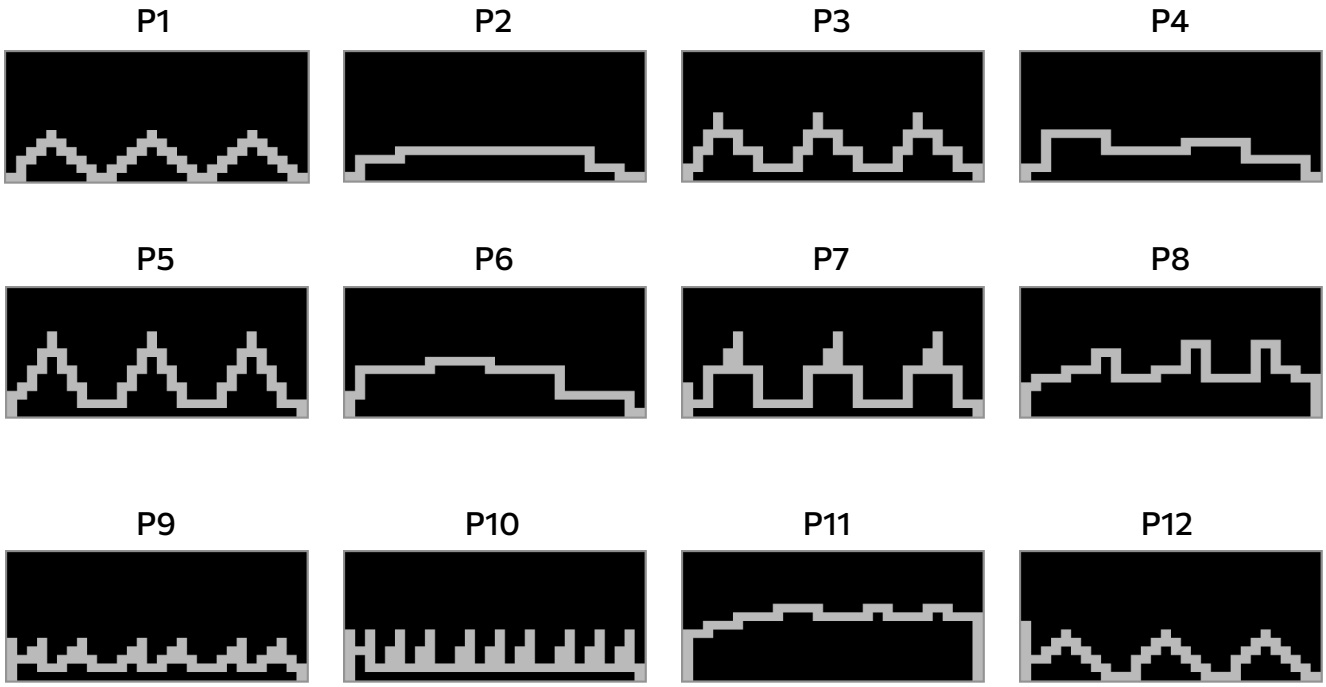

Key:
Speed —

PROGRAMMABLE FEATURES

The TRX1000 Treadmill provides 12 programs (P1,P2,P3.....P12). Each program has its specific speed variations.

To Select and Start a Preset Program

1. Make sure the machine is in the stop position, single press Stop to enter into resetting state. Press Program to choose desired program (P1,P2, ...P12), then press and release Start to begin the program with default values.
2. Each program will continue 30 minutes. This is the preset value. After every one minute during the program, the Speed will be adjusted automatically. The Speed setting can also be adjusted manually at any time during the program. 3 Seconds before the ending of a program a buzzer will sound three times, then the running belt will come to a stop.

GENERAL MAINTENANCE

Belt and Deck - Your treadmill uses a very high-efficient low-friction deck. Performance is maximized when the deck is kept as clean as possible. Use a soft, damp cloth or paper towel to wipe the area between the frame and 6 - 8" under the belt. This should be done once every other month to extend belt and deck life. Use water only - no cleaners or abrasives. A mild soap and water solution along with a nylon scrub brush will clean the top of the textured belt. Allow the belt to dry before using.

Belt Dust - This occurs during normal break-in or until the belt stabilizes. Wiping excess off with a damp cloth will minimize buildup.

General Cleaning - Dirt, dust, and pet hair can block air inlets and accumulate on the running belt. On a monthly basis: vacuum underneath your treadmill to prevent buildup. Every other month, you should remove the black motor hood and carefully vacuum out dirt that may accumulate. UNPLUG POWER CORD BEFORE THIS TASK.

There is a maintenance schedule/chart included under the Table of Contents for convenient record keeping.

BELT ADJUSTMENTS

Tread-belt Tension Adjustment - Belt tension is not critical for most users. It is very important though for joggers and runners in order to provide a smooth, steady running surface. Adjustment must be made from the rear roller with the 6mm Allen wrench provided in the parts package. The adjustment bolts are located at the end of the step rails as shown in the diagram below.

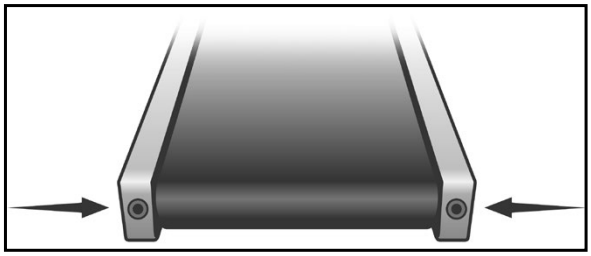

Tighten the rear roller only enough to prevent slippage at the front roller. Turn the tread-belt tension adjusting bolts clockwise a 1/4 turn each and inspect for proper tension by walking on the belt and making sure it is not slipping or hesitating with each step. When an adjustment is made to the belt tension, you must be sure to turn the bolts on both sides evenly or the belt could start tracking to one side instead of running in the middle of the deck.

DO NOT OVERTIGHTEN – Over tightening will cause belt damage and premature bearing failure. If you tighten the belt a lot and it still slips, the problem could actually be the drive belt - located under the motor cover - that connects the motor to the front roller. If that belt is loose it feels similar to the walking belt being loose. Tightening the motor belt should be done by a trained service person.

TREADBELT TRACKING ADJUSTMENT

The treadmill is designed so that the tread-belt remains reasonably centered while in use. It is normal for some belts to drift near one side while in use, depending on a user's gait and if they favor one leg. But if during use the belt continues to move toward one side, adjustments are necessary.

SETTING TREAD-BELT TRACKING

A 6mm Allen wrench is provided for this adjustment. Make tracking adjustments on the left side bolt. Set belt speed at 3 mph. Be aware that a small adjustment can make a dramatic difference which may not be apparent right away. If the belt is too close to the left side, then turn the bolt only a 1/4 turn to the right (clockwise) and wait a few minutes for the belt to adjust itself. Continue to make 1/4 turns until the belt stabilizes in the center of the running deck.

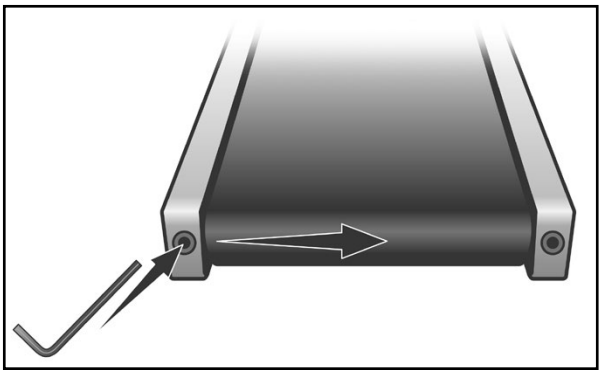

If the belt is too close to the right side, turn the bolt counter-clockwise. The belt may require periodic tracking adjustment depending on use and walking/running characteristics. Some users may affect tracking differently. Expect to make adjustments as required to center the tread-belt. Adjustments will become less of a maintenance concern as the belt is used. Proper belt tracking is an owner responsibility common with all treadmills.

ATTENTION

Damage to the running belt resulting from improper tracking / tension adjustments is not covered under the XTERRA Fitness warranty.

BELT/DECK LUBRICATION PROCEDURE

To ensure the longevity and proper function of your treadmill, proper belt maintenance is required. You should regularly check between the treadmill belt and the top of the treadmill base for proper lubrication, and to ensure that no dirt or debris has become trapped. Keeping the deck clean and lubricated at the recommended intervals ensures the longest life possible for your treadmill. Should lubrication dry out, or dirt become trapped, the friction between the belt and deck increases. Increased friction places undue stress on the drive motor, drive belt, and electronic motor control board which could result in catastrophic failure of these essential, expensive components.

Failure to clean and lubricate the deck at regular intervals may void the warranty.

As a part of your routine maintenance schedule, belt lubrication and cleaning should be performed every 80 hours of use, or earlier if you notice that the deck is dry or dirty. Please also be sure to check belt lubrication before first use. Do not lubricate with anything other than XTERRA Fitness approved lubricant. Your treadmill comes with one tube of treadmill belt lubricant. Extra tubes can be ordered directly from: www.xterrafitness.com, or by calling our customer service department at (870) 336-4286.

Regularly check belt lubrication by completing the following steps:

1. Ensure that your machine is off, and that the power cord is unplugged to minimize risk of injury.
2. Reach between the running belt and the top of the treadmill base to verify that lubrication

is present.

To lubricate your treadmill belt:

1. Ensure that your machine is off, and unplugged to minimize risk of injury.
2. Reach between the belt and the top of the treadmill base to verify that lubrication is present.
3. While kneeling beside your treadmill deck, use one hand to hold the treadmill belt up and away from the treadmill base just enough so you can use your other hand to reach the lubrication underneath.
4. Starting about 1 foot from the motor cover, begin applying ½ of your lubricant bottle in a long "S" pattern about 4-6" from one edge.
5. Repeat steps 3 and 4 on the opposite side using the remaining ½ of the lubricant bottle.
6. Plug the treadmill power cord back in, and turn the power switch back on.
7. Walk on the belt at a moderate speed for 5 minutes to evenly distribute the lubricant along the treadmill belt and deck.
8. Your treadmill belt is now lubricated. Normal use can resume.

Note: If your console display is showing a "LUBE" message, perform the following procedure to reset the display:

1. In standby mode, hold the PROGRAM key for 3 seconds to reset the message.

To clean your treadmill belt:

1. Ensure that your machine is off, and that the power cord is unplugged to minimize risk of injury.
2. Grab one edge of the treadmill belt, and lift slightly to expose the area between the top of the treadmill base and the running belt.
3. Do a visual check for any dirt or debris accumulation.
4. Should dirt and debris be present, slide a towel or cleaning cloth between the treadmill belt and top of the treadmill base until you can grasp one end on each side. (The cleaning cloth should be longer than the running belt is wide to achieve this.)
5. Using both hands, drag the cleaning cloth up and down the length of the treadmill base 1-2 times.
6. For excessive dirt accumulation, rotate the belt halfway, and repeat step 5. Continue until your cleaning cloth is no longer picking up any dirt.
7. Remove cleaning cloth from treadmill before plugging back in.

SERVICE CHECKLIST - DIAGNOSIS GUIDE

Before contacting us for aid, please review the following information. It may save you both time and expense. This list includes common problems that may not be covered under the treadmill's warranty.

Problem	**Meaning**	Solution/Cause
Console Showing LUBE	Reminder to check lubrication under walking deck	1. Check lubrication under walking belt. Reference belt deck lubrication procedure on page 17. 2. Hold PROGRAM button for 3 seconds to reset
Console Showing E1	Console shows E1 8~10 seconds after pressing "Start" button.	1. Does the motor run after "Start" button is pressed? 2. Connector could be loose. 3. Check the cable connecting the console and controller for proper connection.
Console Showing E0	Safety Switch Malfunction	1. If safety key switch is placed properly? 2. Is safety harness I the console connected properly? Any connector damaged? 3. Is safety switch defective?
Console Showing E2	Over Current Protection Treadmill over loaded, controller protection is activated.	1. Check for proper walking belt alignment. Make sure to lubricate belt periodically to minimize resistance. 2. Is there any bearing damage? 3. Has the motor overheated?
Console Showing E4	Improper Motor input voltage. Motor is not connected properly.	1. Motor is not connected properly or not connected to the controller.
Console Showing E5	Communication disconnected between the console and the controller or communication error	1. Check for proper connection between the console and controller.
Console Showing E6	Controller Malfunction	1. Controller component failure
Console Showing E7	Abnormal Power Input	1. Check for proper voltage input for treadmill.

MANUFACTURER'S LIMITED WARRANTY

Effective March 13, 2021- TREADMILL LIMITED WARRANTY

XTERRA Fitness Inc. warrants all its home use treadmill parts for a period of time listed below, from the date of retail sale, as determined by a sales receipt or in the absence of a sales receipt, eighteen (18) months from the original factory shipping date. XTERRA Fitness's responsibilities include providing new or remanufactured parts, at XTERRA Fitness's option, and technical support to our independent dealers and servicing organizations. In the absence of a dealer or service organization, these warranties will be administered by XTERRA Fitness directly to a consumer. The warranty period applies to the following components:

Home Use Limited Warranty

Frame	Motor	Parts	Labor
Lifetime	1 Years	90 days	90 days

NORMAL RESPONSIBILITIES OF THE CONSUMER

This warranty applies only to products in ordinary household use. The consumer is responsible for the items listed below:

1. The warranty registration card must be completed and returned to the address listed on the card within 10 days of the original purchase to validate the manufacturer's limited warranty.
2. Proper use of the treadmill in accordance with the instructions provided in this manual, including maintenance.
3. Proper connection to a power supply of sufficient voltage, replacement of blown fuses, repair of loose connections or defects in house/facility wiring.
4. Expenses for making the treadmill accessible for servicing, including any item that was not part of the treadmill at the time it was shipped from the factory.
5. Damages to the treadmill finish during shipping, installation or following installation.

EXCLUSIONS

This warranty does not cover the following:

1. CONSEQUENTIAL, COLLATERAL, OR INCIDENTAL DAMAGES SUCH AS PROPERTY DAMAGE AND INCIDENTAL EXPENSES RESULTING FROM ANY BREACH OF THIS WRITTEN OR ANY IMPLIED WARRANTY. Note: Some states do not allow the exclusion or limitation of incidental or consequential damages, so this limitation or exclusion may not apply to you.
   Note: Some states do not allow the exclusion or limitation of incidental or consequential damages, so this limitation or exclusion may not apply to you.
2. Service call reimbursement to the consumer. Service call reimbursement to the dealer that does not involve malfunction or defects in workmanship or material, for units that are beyond the warranty period, for units that are beyond the service call reimbursement period, for treadmills not requiring component replacement, or treadmills not in ordinary household use.
3. Damages caused by services performed by persons other than authorized XTERRA Fitness service companies, use of parts other than original XTERRA Fitness parts, or external causes such as alterations, modifications, abuse, misuse, accident, improper maintenance, inadequate power supply, or acts of God.
4. Products with original serial numbers that have been removed or altered.
5. Products that have been; sold, transferred, bartered, or given to a third party.
6. Products that are used as store display models.
7. Products that do not have a warranty registration on file at XTERRA Fitness, Inc. XTERRA Fitness reserves the right to request proof of purchase if no warranty record exists for the product.
8. Product use in any environment other than a residential setting.
9. THIS WARRANTY IS EXPRESSLY IN LIEU OF ALL OTHER WARRANTIES EXPRESSED OR IMPLIED, INCLUDING THE WARRANTIES OF MERCHANTABILITY AND/OR FITNESS FOR A PARTICULAR PURPOSE.

SERVICE

Keep your bill of sale. Twelve (12) months from the date on the bill of sale or eighteen (18) months from the date of factory shipping as determined by the serial number establishes the warranty period should service be required. If service is performed, it is in your best interest to obtain and keep all receipts. This written warranty gives you specific legal rights. You may also have other rights that vary from state to state. Service under this warranty must be obtained by following these steps, in order:

1. Contact your selling authorized XTERRA Fitness dealer. OR
2. Contact your local authorized XTERRA Fitness service organization.
3. If there is a question as to where to obtain service, contact our service department at (870) 336-4286.
4. XTERRA Fitness's obligation under this warranty is limited to repairing or replacing, at XTERRA Fitness's option, the product through one of our authorized service centers. All repairs must be preauthorized by XTERRA Fitness. If the product is shipped to a service center freight charges to and from the service center will be the customer's responsibility. For replacement parts shipped while the product is under warranty, the customer will be responsible for shipping and handling charges. For in-home service, the customer will be responsible for a trip charge. There will be an additional trip charge if the customer is located over 100 miles from the nearest service center.
5. The owner is responsible for adequate packaging upon return to XTERRA Fitness. XTERRA Fitness is not responsible for damages in shipping. Make all freight damage claims with the appropriate freight carrier. DO NOT SHIP ANY UNIT TO OUR FACTORY WITHOUT A RETURN AUTHORIZATION NUMBER. All units arriving without a return authorization number will be refused.
6. For any further information, or to contact our service department by mail, send your correspondence to:
   XTERRA Fitness
   P.O. Box 2037
   Jonesboro, AR 72402-2037

Product features or specifications as described or illustrated are subject to change without notice. All warranties are made by XTERRA Fitness, Inc. This warranty applies only in the 48 contiguous United States. NOTE: This does not apply to Alaska or Hawaii.

3000 Nestle Road Jonesboro, AR 72401 - Phone:870-336-4286 - Fax:870-935-7611

©2025 All Rights Reserved. TRX1000 Owner's Manual