XTERRA FITNESS



TRX1200 TREADMILL

TRX1200_OwnersManual_112084_20251120

Online Support

If you require assistance or are experiencing issues with your XTERRA Machine, please contact customer care for additional help.

1-800-258-8511

questions@xterrafitness.com

Warranty Registration

Scan to quickly and easily register your new XTERRA Fitness machine.

Table of Contents

Product Registration 3
Warning / Safety Instructions
Product Labels 4
Safety Instructions 5
Electrical Safety 6
Grounding & Location Requirements 7
Parts and Assembly
Parts Included 8
Assembly 10
Setting Up Your Unit 14
Safety Key 16
Technology and Features
About Your Machine 17
Features 18
Using the XF Connect App 20
Quick Start 21
Programs
Programs 22
Heart Rate Exertion 23
Maintenance
Maintenance & Care 25
Deck Lubrication 29
Belt & Deck Cleaning & Calibration 30
Exploded View Diagram 31
Parts List 32
Warranty & Troubleshooting
Warranty 35
Troubleshooting 38

PRODUCT REGISTRATION

Congratulations on your new Treadmill, and welcome to the XTERRA Fitness family!

Thank you for your purchase of this quality unit from XTERRA Fitness. Your new unit was manufactured by one of the leading fitness manufacturers in the world and is backed by one of the most comprehensive warranties available. XTERRA Fitness will do all we can to make your ownership experience as pleasant as possible for many years to come.

If you have questions, or if parts are missing or damaged, or you require customer service, call (870) 336-4286. Please have your model number and serial number handy when you call.

Please take a moment at this time to record the name of the dealer, their telephone number, and the date of purchase below to make any future, needed contact easy. We appreciate your support and we will always remember that you are the reason that we are in business.

Serial Number	
Date of Purchase	
Dealer / Place of Purchase	

WARRANTY REGISTRATION

Use your smartphone to scan the QR code above to quickly and easily register your new XTERRA Fitness machine.

You can also go to **xterrafitness.com/warranty** under the Support tab to register online.

Version: 2.0
Revision: 11/20/25

PRODUCT LABELS

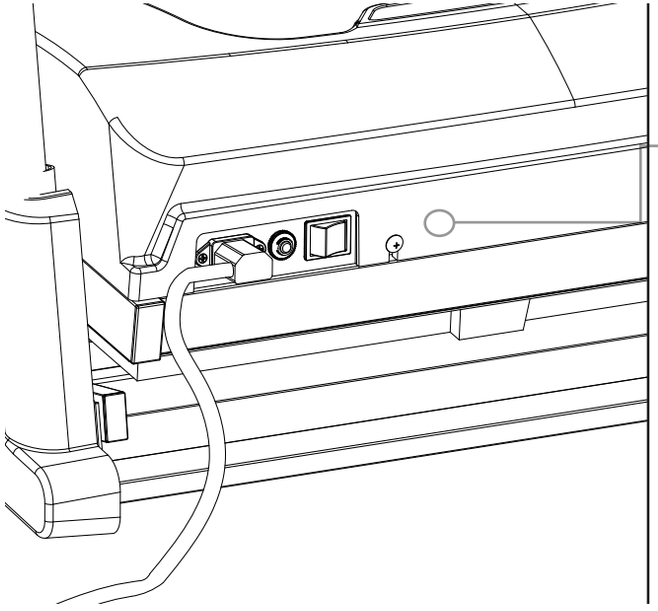



SERIAL NUMBER STICKER

This sticker will be found on the frame near the power switch. Please record the number below the barcode for the purpose of registering your Treadmill's warranty.



PROPOSITION 65 WARNING

This sticker will be found on the frame near the power switch. The State of California requires us to inform you that this unit was manufactured using chemicals that could cause harm with improper use.



SAFETY WARNING STICKER

This sticker will be found on the interior side of your Treadmill's upright. The same warning can be found in this manual. Please read and be aware of the precautions before operating your unit.

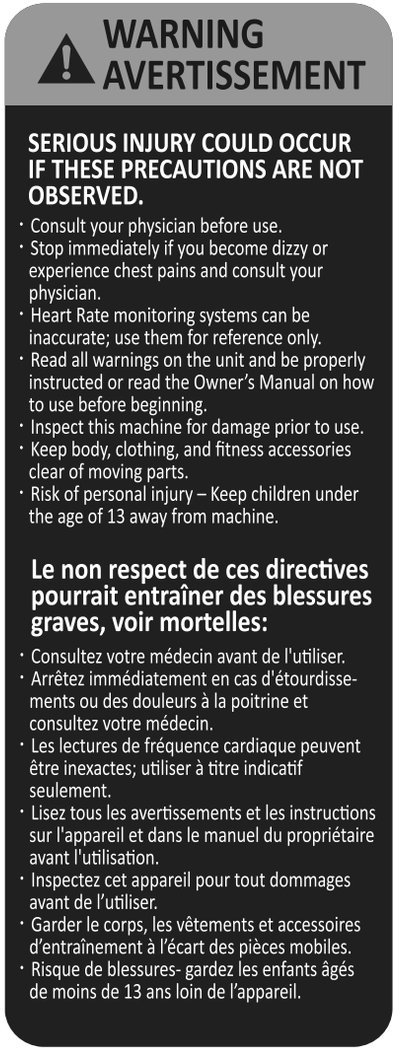

SAFETY INSTRUCTIONS

When using an electrical appliance, basic precautions should always be followed, including the following:
Read all instructions before using this appliance.

DANGER - To reduce the risk of electric shock:
Always unplug this appliance from the electrical outlet immediately after using and before cleaning.

WARNING - To reduce the risk of burns, fire electric shock, or injury to persons:

1. An appliance should never be left unattended when plugged in. Unplug from outlet when not in use, and before putting on or taking off parts.
2. Do not operate under blanket or pillow. Excessive heating can occur and cause fire, electric shock, or injury to persons.
3. This exercise equipment is not intended for use by persons with reduced physical, sensory or mental capabilities, or lack of experience and knowledge.
4. Use this appliance only for its intended use as described in this manual. Do not use attachments not recommended by the manufacturer.
5. Never operate this appliance if it has a damaged cord or plug, if it is not working properly, if it has been dropped or damaged, or dropped into water. Return the appliance to a service center for examination and repair.
6. Do not carry this appliance by supply cord or use cord as a handle.
7. Keep the cord away from heated surfaces.
8. Never operate the appliance with the air openings blocked. Keep the air openings free of lint, hair, and the like.
9. Never drop or insert any object into any opening.
10. Do not use outdoors.
11. Do not operate where aerosol (spray) products are being use or where oxygen is being administered.
12. Connect this appliance to a properly grounded outlet only. See Grounding Instructions.
13. The appliance is intended for household use.
14. To disconnect, turn all controls to the off position, then remove the plug from the outlet.
15. Do not operate equipment on deeply padded, plush or shag carpet. Damage to both carpet and equipment may result.
16. Before beginning this or any exercise program, consult a physician. This is especially important for persons over the age of 35 or persons with pre-existing health conditions.
17. Keep hands away from all moving parts.
18. The pulse sensors are not medical devices. Various factors, including the user's movement, may affect the accuracy of heart rate readings. The pulse sensors are intended only as exercise aids in determining heart rate trends in general.
19. Do not attempt to use your equipment for any purpose other than for the purpose it is intended.
20. Do not operate tablet or laptop when you are running, walking or climbing at high speed.
21. Wear proper shoes. High heels, dress shoes, sandals or bare feet are not suitable for use on your equipment. Quality athletic shoes are recommended to avoid leg fatigue.
22. **User Weight Limit: 250 lbs.**

Please ensure that you review and adhere to the user weight restrictions and power requirements of your new machine. Failure to do so may result in serious injury or damage to your machine.

ELECTRICAL SAFETY

WARNING!

Route the power cord away from any moving part of the unit including the elevation mechanism and transport wheels.

NEVER remove any cover without first disconnecting AC power. If voltage varies by ten percent (10%) or more, the performance of your unit may be affected. **Such conditions are not covered under your warranty.** If you suspect the voltage is low, contact your local power company or a licensed electrician for proper testing.

NEVER expose this unit to rain or moisture. This product is **NOT** designed for use outdoors, near a pool or spa, or in any other high humidity environment. The temperature specification is 40 degrees C, and humidity is 95%, non-condensing (no water drops forming on surfaces).

Circuit breakers: Avoid AFCI/GFCI circuit breakers if possible. These breakers may trip occasionally during exercise because of the high inrush currents of the unit drive electronics and motor. This is an issue that affects all unit brands. New laws in your area may require these breakers. If you do have these breakers and outlets in your home, and are experiencing nuisance tripping, you should check if there are any other devices plugged into the same circuit. Some examples of devices that may also cause tripping are fluorescent lights with electronic ballasts, coffee maker, space heater, hair drier.

Optimally the unit should be the only device plugged into the circuit. Our units have surge suppressors built in to help avoid nuisance tripping. We have tested several AFCI/GFCI breakers and outlets with our products. Brands we have tested are: Eaton (Cutler Hammer Series), Leviton (Smart lock pro) and Schneider Electric (Canadian home series). These breakers do not trip in our testing, when connected to our units, as long as no other devices are plugged into the same circuit.

- **NEVER** operate this unit without reading and completely understanding the results of any operational change you request from the computer.
- Understand that changes in speed and incline do not occur immediately. Set your desired work level on the computer console and release the adjustment key. The computer will obey the command gradually.
- **NEVER** use your unit during an electrical storm. Surges may occur in your household power supply that could damage unit components. Unplug the unit during an electrical storm as a precaution.
- Use caution while participating in other activities while walking on your unit; such as watching television, reading, etc. These distractions may cause you to lose balance which may result in serious injury.
- Do not use excessive pressure on console control keys. They are precision set to function properly with little finger pressure.

GROUNDING & LOCATION REQUIREMENTS

This product must be grounded. If the unit should malfunction or breakdown, grounding provides a path of least resistance for electric current, reducing the risk of electric shock. This product is equipped with a cord having an equipment-grounding plug. The plug must be plugged into an appropriate outlet that is properly installed and grounded in accordance with all local codes and ordinances.

DANGER - Improper connection of the equipment-grounding conductor can result in a risk of electric shock. Check with a qualified electrician or serviceman if you are in doubt as to whether the product is properly grounded. Do not modify the plug provided with the product if it will not fit the outlet; have a proper outlet installed by a qualified electrician.

This product is for use on a nominal 120-volt ~ 60 Hertz circuit, and has a grounding plug that looks like the plug illustrated below. A temporary adapter that looks like the adapter illustrated below may be used to connect this plug to a 2-pole receptacle as shown below if a properly grounded outlet is not available. The temporary adapter should be used only until a properly grounded outlet, (shown below) can be installed by a qualified electrician. The green colored rigid ear-lug, or the like, extending from the adapter, must be connected to a permanent ground such as a properly grounded outlet box cover. Whenever the adapter is used, it must be held in place by a metal screw.

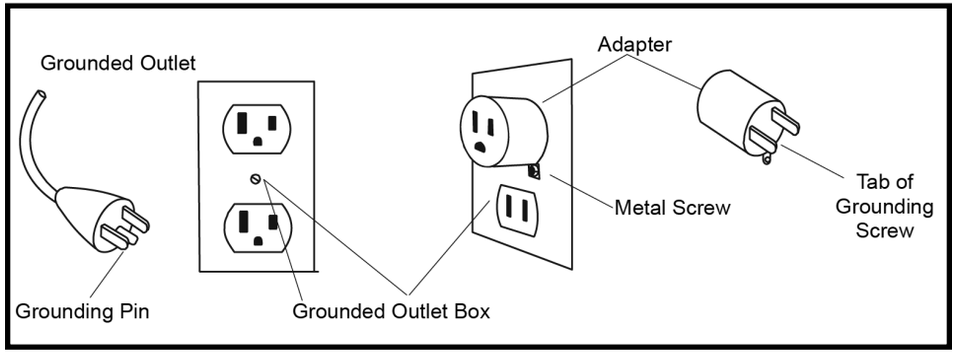

Location Requirements

After assembling your Treadmill, you'll need to make sure you've installed it in a safe area.

- We recommend that you leave an area of at least 20in on the front, and sides of your machine. The front of the unit is where the motor is located.
- We recommend that you leave an area of at least 6ft behind the Treadmill.
- Install your Treadmill in an area where children and pets cannot access it.
- Always keep the area around your Treadmill clear of furniture, exercise equipment and other debris.
- Do not install your Treadmill on deeply padded, plush, or shag carpet.

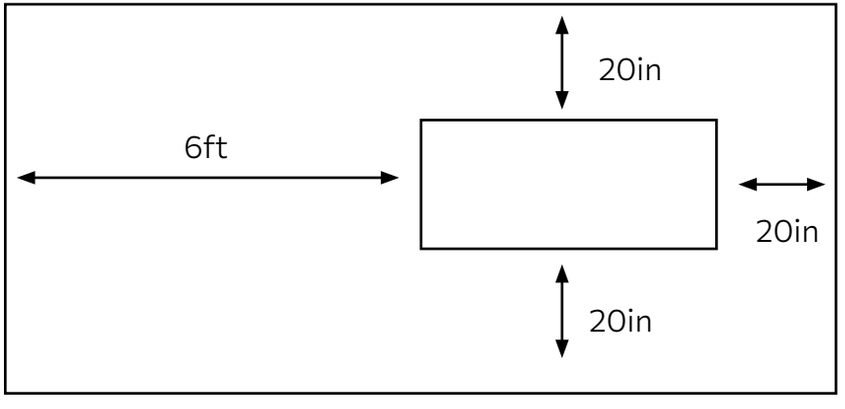

PARTS OF YOUR UNIT

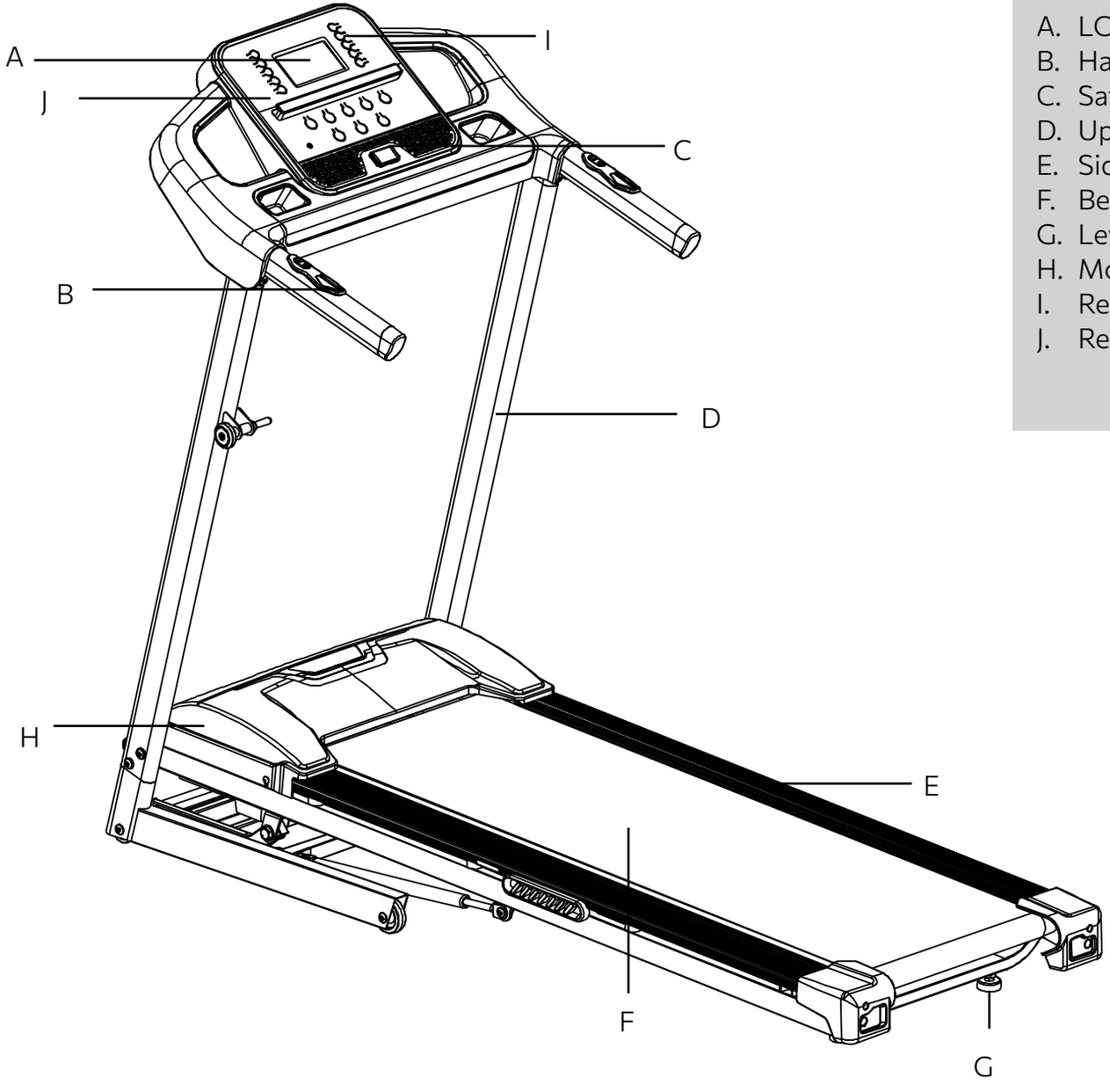

A. LCD Window
B. Hand Pulse Grips
C. Safety Key
D. Upright
E. Side Rails
F. Belt
G. Leveler
H. Motor
I. Remote Speed Buttons
J. Remote Incline Buttons

PARTS INCLUDED

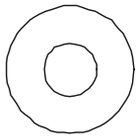

#79. Ø8 × Ø18 × 1.5T
Flat Washer(6pcs)

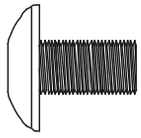

#87. 5/16" × UNC18 × 1/2"
Button Head Socket Bolt (12pcs)

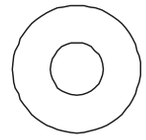

#88. Ø8 × Ø23 × 1.5T
Curved Washer (6pcs)

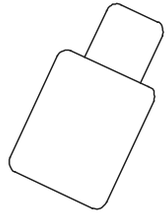

#105. Lubricant
(1pc)

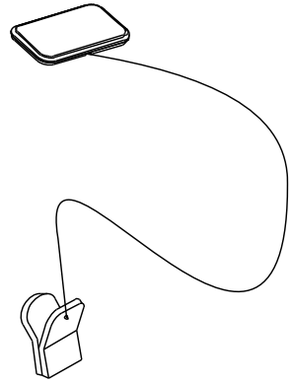

#40. Safety Key
(1pc)

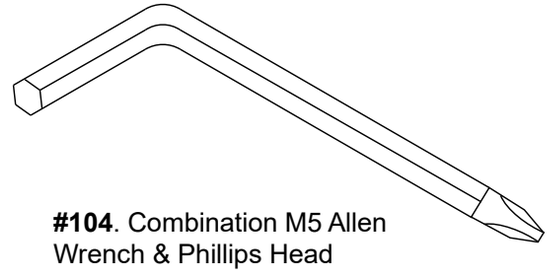

#104. Combination M5 Allen
Wrench & Phillips Head
Screw Driver (1pc)

ASSEMBLY

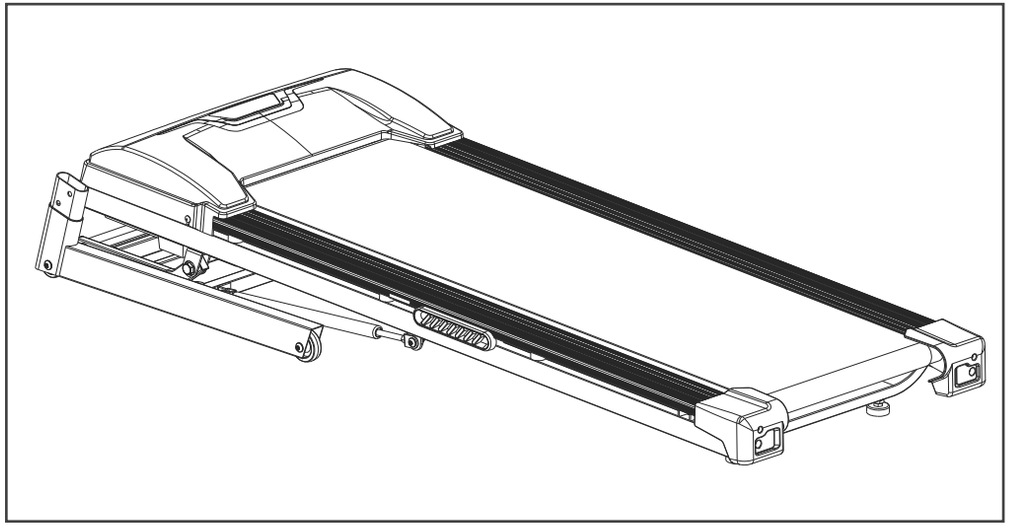

1. Remove the UNIT from the box and put it on a flat and level floor.

HARDWARE
No Hardware required for this step

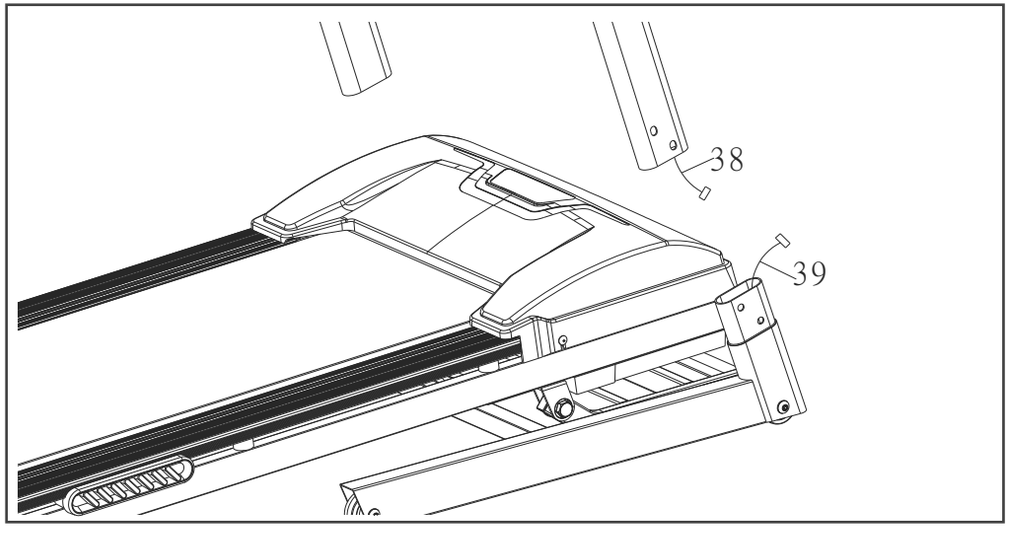

2. Connect the **MIDDLE COMPUTER CABLE (38)** with the **LOWER COMPUTER CABLE (39).**

HARDWARE
No Hardware required for this step

NOTE: this step may work better with a second person assisting.

ASSEMBLY - CONTINUED

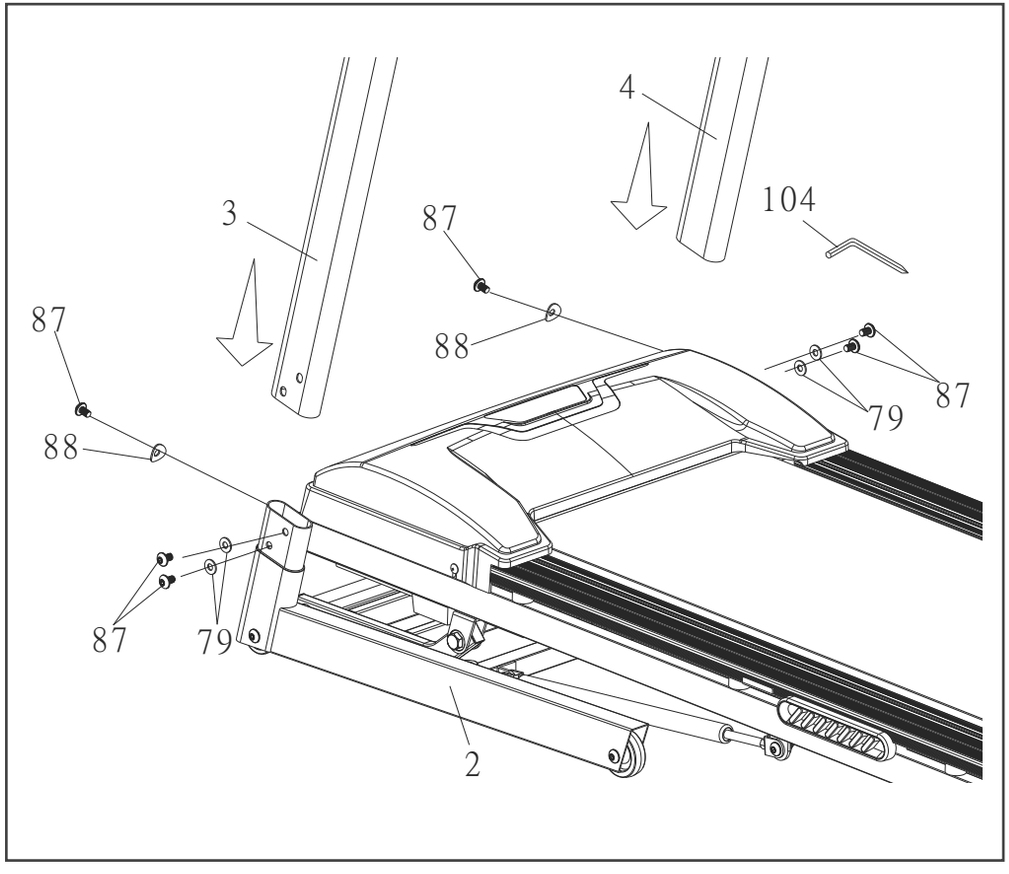

HARDWARE
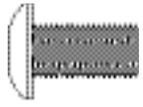 Bolt (87) Qty: 6
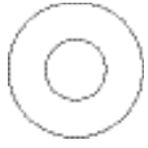 Flat Washer (79) Qty: 4
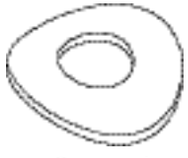 Curved Washer (88) Qty: 2

NOTE: this step may work better with a second person assisting.

3. Insert the **UPRIGHTS (L, R)(3,4)** into the **FRAME BASE (2)** with the 6 **BUTTON HEAD SOCKET BOLTS (87)**,4 **FLAT WASHERS (79),** and 2 **CURVED WASHERS (88)** on the rounded side of the upright by using the **ALLEN WRENCH**. (Please secure the screw without tightening it.)

ASSEMBLY - CONTINUED

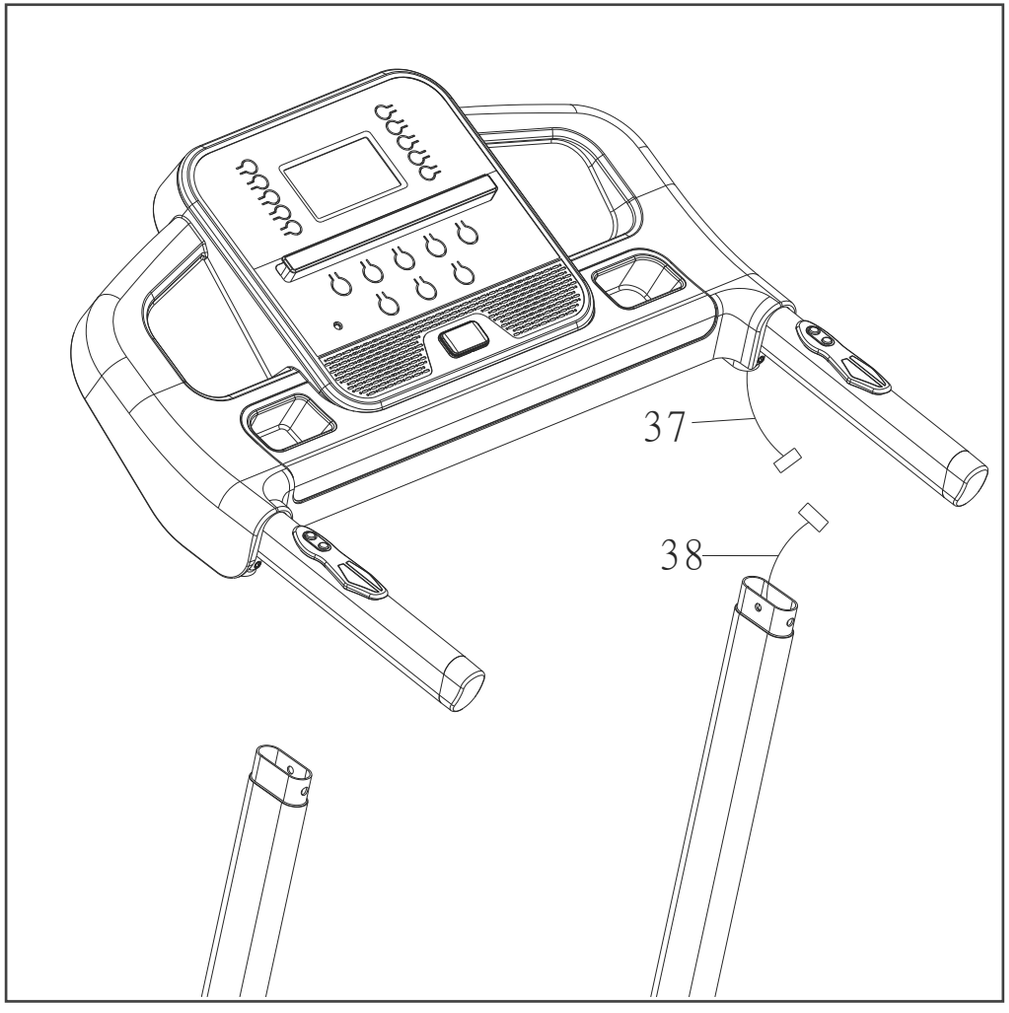

HARDWARE
No Hardware required for this step

NOTE: this step may work better with a second person assisting.

4. Connect the **UPPER COMPUTER CABLE (37)** with the **MIDDLE COMPUTER CABLE (38).**

ASSEMBLY - CONTINUED

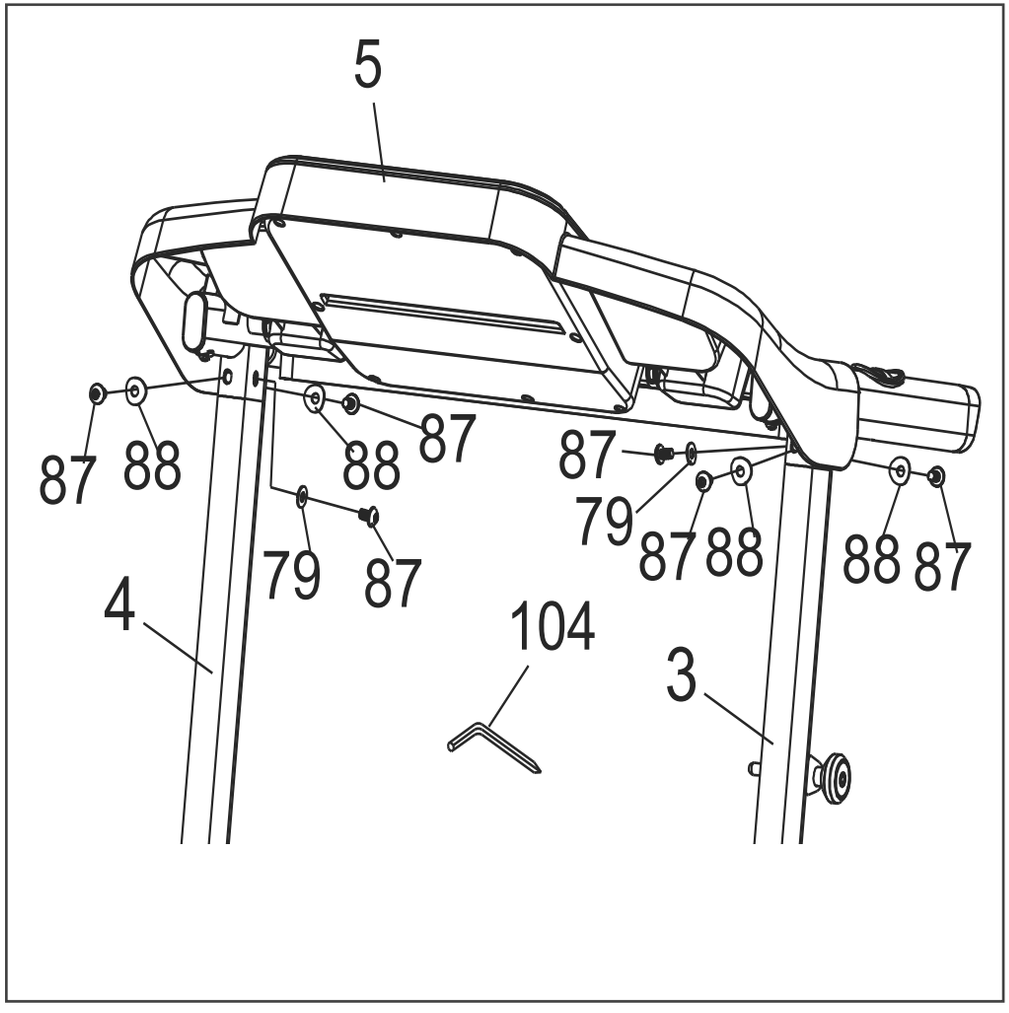

5. Install the **CONSOLE SUPPORT (5)** onto the **UPRIGHTS (L,R)(4,3)** with the 6 **BUTTON HEAD SOCKET BOLTS (87)** and 4 **CURVED WASHERS (88),** and 2 **FLAT WASHERS (79)** on the flat interior side by using the **ALLEN WRENCH AND PHILLIPS HEAD SCREW DRIVER.**

HARDWARE
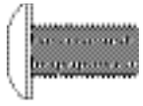 Bolt (87) Qty: 6
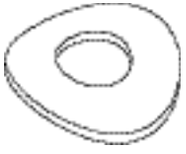 Curved Washer (88) Qty: 4
 Flat Washer (79) Qty: 2

NOTE: Be careful not to pinch the computer cables when attaching the console.

NOTE: Please tighten all screws after assembly is complete.

SETTING UP YOUR TREADMILL

Leveling

Use a M14 Wrench to adjust the height of the Leveling Feet.

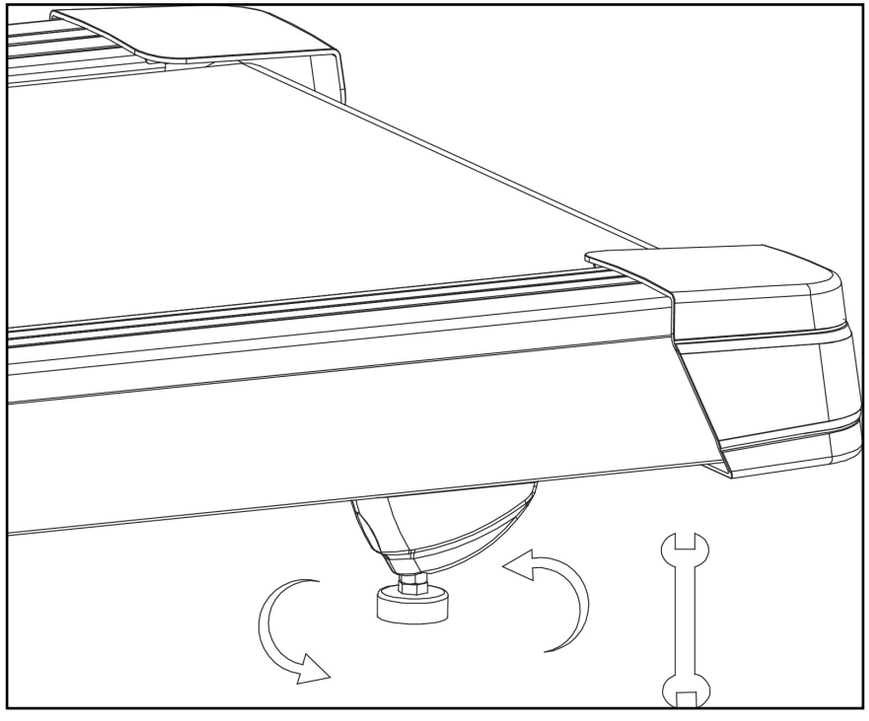

Plugging in and Powering On

Power the unit on by plugging it into an appropriate wall outlet, then turn on the power switch located at the front of the treadmill below the motor hood, Ensure that the Safety Key is installed, as the treadmill will not power on without it. When the power is turned on, all the lights on the display will light up for a short time and the console will show the software version.
The treadmill will then enter idle mode, which is the starting point for operation.

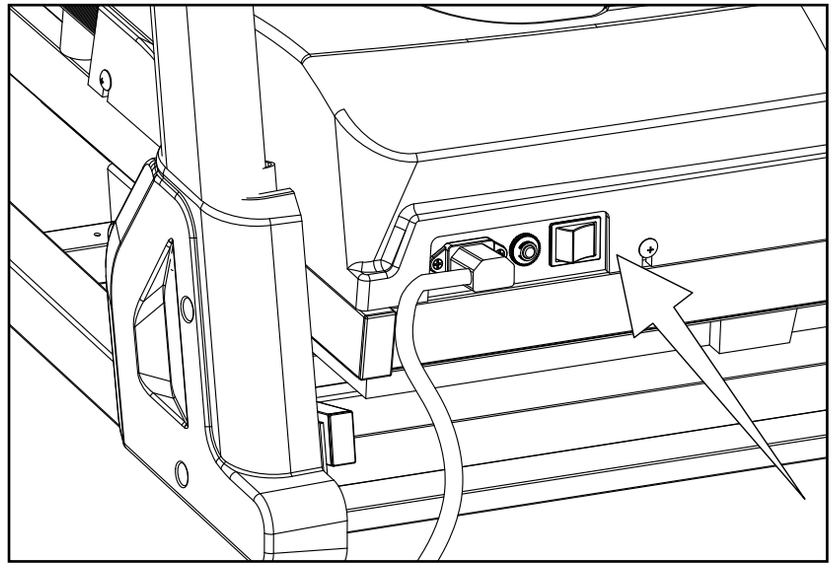

SETTING UP YOUR TREADMILL

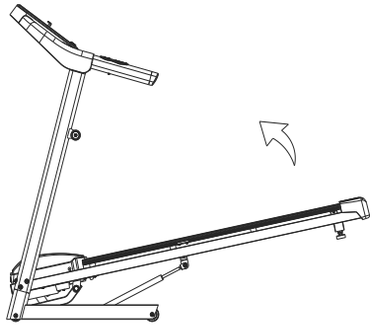

FOLDING INSTRUCTIONS

TO FOLD THE TREADMILL

Lift the treadmill running deck until it is secured by the locking mechanism on the left upright tube. You will hear it pop into place when secure.

WARNING: Before unfolding the treadmill, hold the deck with one hand to prevent it from falling and release the knob with your other hand.

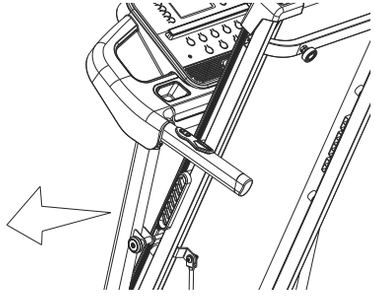

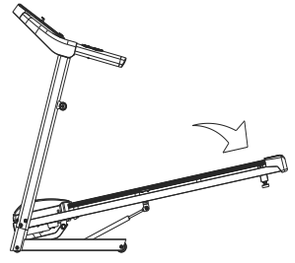

TO UNFOLD THE TREADMILL

Apply slight forward pressure on the treadmill running deck with your right hand. Pull out on the round knob and slowly lower the running deck to the floor.

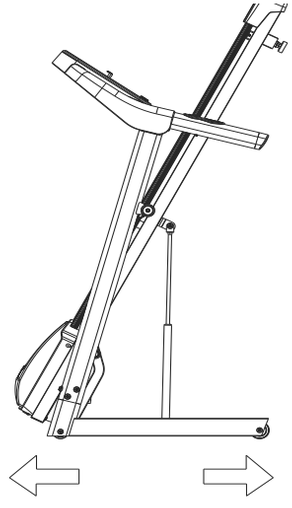

TRANSPORTATION INSTRUCTIONS

The treadmill is equipped with two transport wheels. Fold your Treadmill before moving. Lean the Treadmill back so that the transport wheels touch the floor. You are then free to move the unit.

SAFETY KEY

A safety tether cord is provided with this unit.
It is a simple magnetic design that should be used at all times.
It is for your safety should you fall or move too far back on the tread-belt.
Pulling this safety tether cord will stop tread-belt movement.

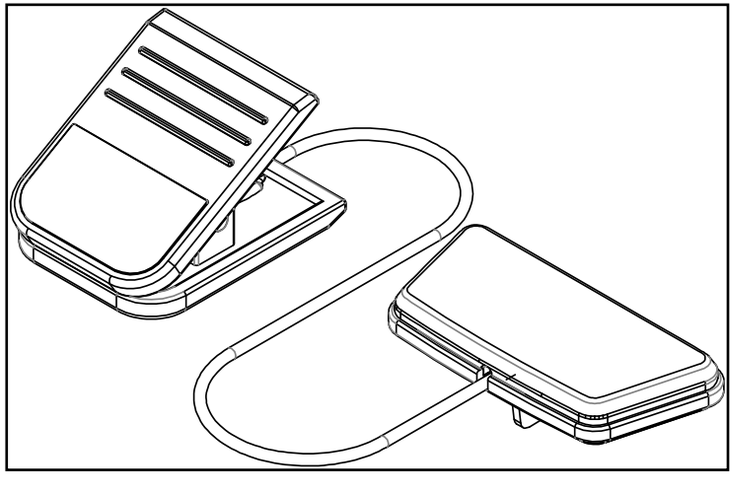

To Use:

1. Place the magnet into position on the round metal portion of the console control head. Your unit will not start and operate without this. Removing the magnet also secures the unit from unauthorized use.
2. Fasten the plastic clip onto your clothing securely to ensure good holding power. Note: The magnet has strong enough power to minimize accidental, unexpected stopping. The clip should be attached securely to make certain it does not come off. Be familiar with its function and limitations. The unit will stop, depending on speed, with a one to two step coast anytime the magnet is pulled off the console. Use the Stop / Pause switch in normal operation.

ABOUT YOUR MACHINE

Always use care and caution when operating your machine. Follow instruction in this manual to ensure safe operation and maintenance of your treadmill

Your new XTERRA Fitness treadmill has Bluetooth connectivity to give you access to the most advanced workout experiences available. Follow the instructions on page 20 to learn more about using the Bluetooth capabilities to their fullest potential.

Downloading the XF Connect app will help unlock more features - such as tracking workouts and sharing data via Google Fit and Apple Fitness. Simply search for "XF Connect" in the app store on your smartphone or tablet, or scan the QR code on the right



The XF Connect app is available on Google Play and the Apple App Store. Scan the QR Code below, and quickly and easily sign up to start taking your workout experience to a whole new level.

Available on the App Store

GET IT ON Google play

Be sure to follow XTERRA Fitness on your favorite social media platforms to view and share the latest fitness videos, images, and news.

facebook.com/XterraFitness

www.instagram.com/XterraFitness

youtube.com/user/XterraFitnessOnline

FEATURES

Handlebar Speed and Incline Controls

The treadmill allows you to make speed and incline changes on the side handrails.

Pause / Stop / Reset

1. When the treadmill is running the pause feature may be utilized by pressing the red Stop key once. This will slowly decelerate the tread-belt to a stop. The Time, Distance and Calorie readings will hold while the unit is in the pause mode. After five minutes the display will reset and return to the start up screen.
2. To resume your exercise, when in Pause mode, press the Start key. The speed will return to the previous settings.
3. Pause is executed when the Stop key is pressed once. If the Stop key is pressed a second time, the console will reset and return to the idle mode (start up) screen.

Pulse Grip Feature

The Pulse (Heart Rate) window will display your current heart rate in beats per minute during the workout. You must use both stainless steel sensors on the stationary grips or the heart rate transmitter chest strap (sold separately) to display your pulse. Pulse value displays anytime the upper display is receiving a Pulse signal. You may not use the Pulse Grip feature while in Heart Rate Programs.

Calorie Display

Displays the cumulative calories burned at any given time during your workout.

Note: This is only a rough guide used for comparison of different exercise sessions, and is not to be used for medical purposes.

Kilometer and Mile Switching Function

In the standby state, press the speed deceleration key and the program key at the same time, and the buzzer will sound twice to switch successfully.

To Turn Treadmill Off

1. Display will automatically turn off (go to sleep) after 30 minutes (no key operations).The treadmill will draw very little current in sleep mode (about as much as your television when it is turned off).
2. Remove safety key.
3. Turn off the main switch on the front of the treadmill, below the motor cover

CONSOLE SCREEN - OVERVIEW



USING THE XF CONNECT APP

In order to help you achieve your exercise goals, your new exercise machine comes equipped with a Bluetooth® transceiver that will allow it to interact with selected phones or tablet computers via the XF Connect App. Just download the free XF Connect App from the Apple Store or Google Play, and then follow the instructions in the App to sync with your exercise machine.

Press the “DISPLAY” button from the APP to view the display of the current workout data. When your exercise is complete, choose “END & SAVE WORKOUT” to store the workout data.

1. Download the App by scanning the QR code on the right.
2. Open the App on your device (phone or tablet) and make sure Bluetooth® is enabled on your device (phone or tablet).
3. In the App click the Bluetooth® icon to search for your XF Connect equipment.
4. Under the Bluetooth® scan result list, select the machine for connect. When the App and equipment are synced, the Bluetooth® icon on the equipment’s console display will light up. Click “DISPLAY”, you may now start using your XF Connect App.
5. When your exercise is complete, choose “END & SAVE WORKOUT” to store the workout data. You will be prompted to sync your data with each available fitness cloud site. Please note, you will have to download the applicable compatible fitness App, such as Apple Health, Google Fit, Strava, MapMyFitness, Fitbit, etc., in order for the icon to be active and available.

Note: Your device will need to be running on a minimum operating system of IOS 13.1 or Android 8.0 for the XF Connect App to operate properly.

The exercise equipment’s Bluetooth device (BLE 5.0) can also be connected to the Bluetooth wireless heart rate chest strap transmitter (BLE 5.0). The chest strap transmitter can receive signals even when the App is already in use. You can wear the Bluetooth wireless heart rate chest strap (sold separately) first then commence connection. While in connection, the console will show heart rate value via Bluetooth.



QUICK START / MANUAL

Quick Start

1. Insert the Safety key. The display will appear in ready mode. (If the safety key is not inserted, error E0 will appear on the display speed window.).
2. Press the Start key to begin belt movement. Adjust to the desired speed using the Speed ▲ and ▼ keys. You may also use the direct SPEED buttons 2, 4, 6, 8, 10 to adjust the speed.
3. To incline the tread-belt press and the Incline ▲ /▼ key to the desired incline level. You may also press the direct INCLINE buttons 0, 3, 5, 7, 10 to adjust.
4. To stop the tread-belt press the Stop key or pull away Safety key.

Manual

In standby mode, you can start immediately or press ENTER to set the countdown parameters (time, distance, calories). Press SPEED up and down in order to adjust the time, distance, calories. Press the ENTER key to switch between time, distance, calories and to confirm your selection. The system will only accept the last number of parameters. For example, if the last input is a distance, the previous parameter will be invalid and only the distance setting will be accepted.
Time preset value: 30:00 (5:00 - 99:00). For each increase, the reduced value is 1:00.
Distance default value: 5.00 miles (1.00 - 99). 0.1 increments at a time. The reduced value is 0.1.
Calories preset value: 500 (10-990), 10 increments each time. The reduced value is 10. The starting speed is 0.5 miles and the number of ascending segments is zero.

PRESET PROGRAMS

P1



P2

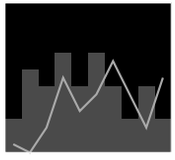

P3

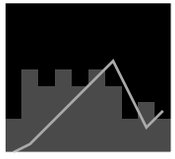

P4

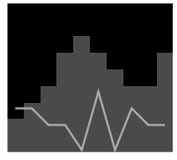

P5



P6



P7

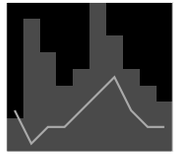

P8



P9

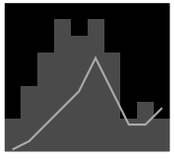

P10



P11



P12



Key:
Incline

The TRX1200 Treadmill provides 12 programs (P1,P2,P3.....P12). Each program has its specific speed variations.

To Select and Start a Preset Program

1. Make sure the machine is in the stop position, single press Stop to enter into resetting state. Press Program to choose desired program (P1,P2, ...P12), then press and release Start to begin the program with default values.
2. Each program will continue 30 minutes. This is the preset value. After every one minute during the program, the Speed will be adjusted automatically. The Speed setting can also be adjusted manually at any time during the program. 3 Seconds before the ending of a program a buzzer will sound three times, then the running belt will come to a stop.

HEART RATE EXERTION

The old motto, “no pain, no gain”, is a myth that has been overpowered by the benefits of exercising comfortably. A great deal of this success has been promoted by the use of heart rate monitors. With the proper use of a heart rate monitor, many people find that their usual choice of exercise intensity was either too high or too low and exercise is much more enjoyable by maintaining their heart rate in the desired benefit range.

To determine the benefit range in which you wish to train, you must first determine your Maximum Heart Rate. This can be accomplished by using the following formula: 220 minus your age. This will give you the Maximum Heart Rate (MHR)for someone of your age. To determine the effective heart rate range for specific goals you simply calculate a percentage of your MHR. Your Heart rate training zone is 50% to 90% of your maximum heart rate. 60% of your MHR is the recommended for burning fat while 80% is recommended for strengthening the cardio vascular system. This 60% to 80% is the zone to stay in for maximum benefit.

For someone who is 40 years old their
target heart rate zone is calculated:
220 – 40 = 180 (maximum heart rate)
180 x .6 = 108 beats per minute (60% of maximum)
180 X .8 = 144 beats per minute (80% of maximum)
So for a 40 year old the training zone would
be 108 to 144 beats per minute.

If you enter your age during programming the console will perform this calculation automatically. Entering your age is used for the Heart Rate programs. After calculating your MHR you can decide upon which goal you would like to pursue.

The two most popular reasons for, or goals, of exercise are cardiovascular fitness (training for the heart and lungs) and weight control. The black columns on the chart represent the MHR for a person whose age is listed at the bottom of each column. The training heart rate, for either cardiovascular fitness or weight loss, is represented by two different lines that cut diagonally through the chart. A definition of the lines’ goal is in the bottom left-hand corner of the chart. If your goal is cardiovascular fitness or if it is weight loss, it can be achieved by training at 80% or 60%, respectively, of your MHR on a schedule approved by your physician. Consult your physician before participating in any exercise program.

With this Spirit Fitness unit you may use the heart rate monitor feature without using the Heart Rate program. However, when using the heart rate monitor feature in conjunction with the Heart Rate programs, the machine will automatically adjust speed or incline to maintain the desired heart rate.

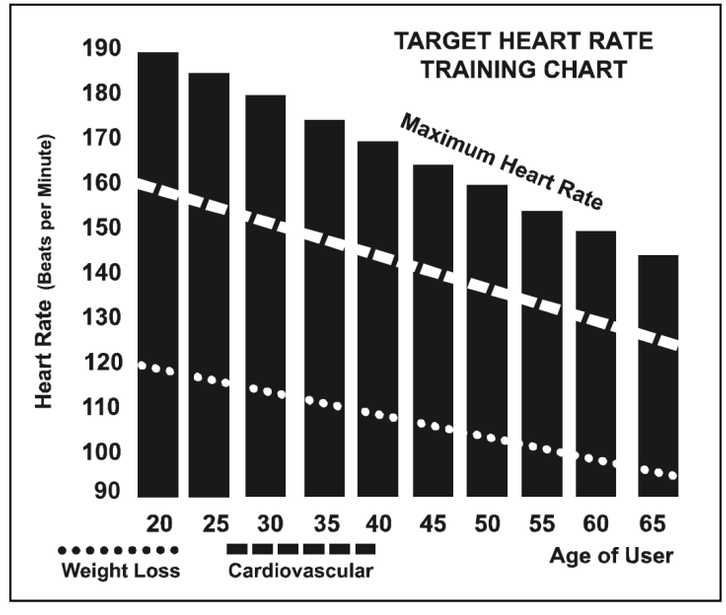

HEART RATE - PERCEIVED EXERTION

Heart rate is important but listening to your body also has a lot of advantages. There are more variables involved in how hard you should workout than just heart rate. Your stress level, physical health, emotional health, temperature, humidity, the time of day, the last time you ate and what you ate all contribute to the intensity at which you should workout. If you listen to your body it will tell you all of these things.

The rate of perceived exertion (RPE), also known as the Borg scale, was developed by Swedish physiologist G.A.V. Borg. This scale rates exercise intensity from 6 to 20 depending upon how you feel or the perception of your effort.
The scale is as follows:

Rating Perception of Effort

6	Minimal
7	Very, Very Light
8	Very, Very Light +
9	Very Light
10	Very Light +
11	Fairly Light
12	Comfortable
13	Somewhat Hard
14	Somewhat Hard +
15	Hard
16	Hard +
17	Very Hard
18	Very Hard +
19	Very, Very Hard
20	Maximal

You can get an approximate heart rate level for each rating by simply adding a zero to each rating. For example a rating of 12 will result in an approximate heart rate of 120 beats per minute. Your RPE will vary depending on the factors discussed earlier. If your body is strong and rested, you will feel strong and your pace will feel comfortable. When your body is in this condition, you are able to train harder and the RPE will support this. If you are feeling tired and sluggish, it is because your body needs a break. In this condition, your pace will feel difficult. Again, this will show up in your RPE and you will train at the proper level for that day.

MAINTENANCE & CARE

Post-Workout Machine Care

1. Use a slightly damp cloth to clean areas where sweat or oil made contact with the machine.
2. Use a microfiber cloth to clean the display and remove unwanted oils and other things that may damage the screen.
3. Avoid leaving paper or other small debris in the cupholders.

General Cleaning

Dirt, dust, and hair can block air inlets and accumulate on the running belt. Please vacuum underneath your unit on a monthly basis to prevent excess build-up of dirt that can get sucked up and get into the inner workings under the motor cover. Every other month, you should remove the motor cover and carefully vacuum out dirt and hair that may accumulate.

UNPLUG THE POWER CORD BEFORE THIS TASK.

Sanitizing Your XTERRA Fitness Equipment

- Unupholstered high-contact surfaces (hard plastics) can be sanitized using a 75% isopropyl alcohol solution and a clean, dry cloth. Spray surfaces to be sanitized, and use the dry cloth to wipe clean. Allow surfaces to dry before using.
- For upholstered or soft-plastic surfaces, use a conditioner after sanitizing. Be sure to follow the instructions provided by the conditioner manufacturer to ensure proper use of the conditioner.
- Alternatively, you can make your own spray by mixing the proper ratio of isopropyl alcohol and distilled water to reach a 75% solution.

MAINTENANCE & CARE - CONTINUED

Aligning the Running Belt

Ensure the running belt is centered on your treadmill at all times . Running style and Non-level surface are two instances which may cause the belt to drift off center .
Minor adjustments to the two bolts at the rear of the treadmill are necessary when the belt has drifted off center . See fig . A & B .

1. Press the Power Switch (located at the front of the treadmill) to ON position and ensure Safety Key is properly placed onto the computer console, press the START button to begin running, then increase the treadmill's speed to 2 MPH .
2. Stand right behind the treadmill and to determine which side the belt is drifting .
3. If the belt drifts to the right, turn the right adjustment bolt one-quarter of a turn clockwise and the left adjustment bolt one-quarter counter clockwise (See Fig . A) .
4. If the belt drifts to the left, turn the left adjustment bolt one-quarter of a turn clockwise and turn the right adjustment bolt one-quarter turn counter-clockwise (See Fig . B) .
5. Observe the tracking of the belt for about two minutes . Repeat Steps 3, 4, and 5 as needed .

! **DO NOT OVERTIGHTEN** – Over tightening will cause belt damage and premature bearing failure. If you tighten the belt a lot and it still slips, the problem could actually be the drive belt - located under the motor cover - that connects the motor to the front roller. If that belt is loose it feels similar to the walking belt being loose. Tightening the motor belt should be done by a trained service person.

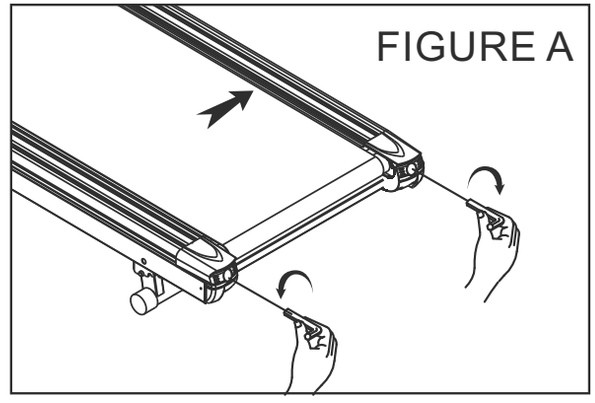

drifts to the right

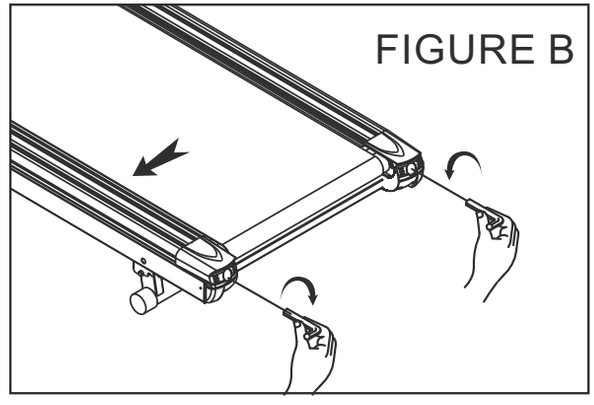

drifts to the left

MAINTENANCE & CARE - CONTINUED

Aligning the Running Belt Tension

Adjust the belt tension if it begins to slip on the rollers . This is important as it increased the longevity of the treadmills components .

Before adjusting belt tension, keep the belt loose

1. Turn the MASTER POWER SWITCH to the ON position and make sure safety key is pressed in.
2. Press START button to start running the belt, then increase speed to 2 MPH .
3. Turn both adjustment screws an equal amount, approximately one-quarter turn clockwise .
4. Slow the belt by holding onto the handrails and applying more weights as you walk, (as if you are walking downhill) . Then stepping heavily on the belt to see if the belt slips .
5. If the belt slips, adjust one-quarter turn clockwise and repeat STEP 4 if necessary .

   ALWAYS BE CAREFUL NOT TO OVERTIGHTEN THE RUNNING BELT.

MAINTENANCE & CARE - CONTINUED

Item	Daily (Before Use)	Daily (After Use)	Weekly	Monthly	3 Months	6 Months
Entire Machine	Examine if the frame is stable for exercise. Adjust balancer to make it stably positioned on the ground.	Use dry cloth to wipe and clear sweat and dust on the surface of machine.		Use damp cloth to clean. (Do not use Solubility Cleaners.) Use water for plastic parts. Use silicone oil or wax for metal parts.		
Location	Assure enough safe space around the machine, and make sure no dangerous objects around.	Use wet cloth to clean the ground. Do not put wax on the ground.	Vacuum dust at the bottom and around the machine.			
Power Cable	Assure power cable is well-plugged and not pressed by the machine.	Turn off the power or unplug power cable.				
Running Belt	Assure no objects on the belt, and run the machine at 2-3 MPH to see if the belt drifts.	Use dry cloth to wipe and clear the surface of running belt.		Use damp cloth to clean (Do not use Solubility Cleaners).		
Running Belt Tension Adjustment	Check if running belt is slipping.					
Lubrication of Running Belt					Use a silicone lubricant to lubricate whenever reaching 112 miles.	
Side Panel				Check if they are well-fixed and make sure no breakdown on the panel.		
Bolt				Check if all bolts are firmly fastened and no rusting.		
The Inside of Motor Cover						Open motor cover and vacuum all dust.
Safety Key	Turn the power on and remove safety key to check if it is in normal function.	Make sure safety key is re-placed on the console.				

DECK LUBRICATION

1. The word of ‘LUBE’ will flash in every 3 seconds on the console once accumulated running time reaches 10 hour to remind user to do the maintenance. ‘LUBE’ will appear again every 40 hour
2. Press any button to jump out of the alert mode. Word of 'LUBE will show up again whenever the machine re-starts if the user doesn't eliminate the word by taking action of No. 3 as below.
3. In standby mode, hold the PROGRAM key for 3 seconds to reset the message.

To ensure the longevity and proper function of your Treadmill, proper belt maintenance is required. You should regularly check between the Treadmill belt and the top of the Treadmill base for proper lubrication, and to ensure that no dirt or debris has become trapped. Keeping the deck clean and lubricated at the recommended intervals ensures the longest life possible for your unit. Should lubrication dry out, or dirt become trapped, the friction between the belt and deck increases. Increased friction places undue stress on the drive motor, drive belt, and electronic motor control board which could result in catastrophic failure of these essential, expensive components.

Failure to clean and lubricate the deck at regular intervals may void the warranty.

As a part of your routine maintenance schedule, belt lubrication and cleaning should be performed every 90 days, after 90 hours of use, or earlier if you notice that the deck is dry or dirty. Please also be sure to check belt lubrication before first use.

Do not lubricate with anything other than XTERRA Fitness approved lubricant. Your Treadmill comes with one tube of Treadmill belt lubricant.

Extra tubes can be ordered directly from: www.Xterrafitness.com, or by calling our customer service department at (800)258-8511.

Regularly check belt lubrication by completing the following steps:

To lubricate your Treadmill belt:

1. Turn the power switch off and unplug the power cord from the wall outlet.
2. Measure 18” from the edge of the motor cover; kneel down and reach under the belt approximately 4-6” from one edge. Squirt a line of lubricant about 1/8” wide x 15” long in an “S” pattern perpendicular to the motor cover.
3. Repeat the process on the opposite side.
4. Plug the electrical cord back into the outlet and turn the power switch on.
5. Walk on the belt at a moderate speed for five minutes to evenly distribute the silicone lube.

1. Ensure that your machine is off, and that the power cord is unplugged to minimize risk of injury.
2. Reach between the running belt and the top of the Treadmill base to verify that lubrication is present.

BELT AND DECK CLEANING

Belt & Deck Cleaning

To clean your Treadmill belt:

1. Ensure that your machine is off, and that the power cord is unplugged to minimize risk of injury.
2. Grab one edge of the Treadmill belt, and lift slightly to expose the area between the top of the Treadmill base and the running belt.
3. Do a visual check for any dirt or debris accumulation.
4. Should dirt and debris be present, slide a towel or cleaning cloth between the Treadmill belt and top of the Treadmill base until you can grasp one end on each side. (The cleaning cloth should be longer than the running belt is wide to achieve this.)
5. Using both hands, drag the cleaning cloth up and down the length of the Treadmill base 1-2 times.
6. For excessive dirt accumulation, rotate the belt halfway, and repeat step 5. Continue until your cleaning cloth is no longer picking up any dirt.
7. Remove cleaning cloth from Treadmill before plugging back in.

EXPLODED VIEW DIAGRAM

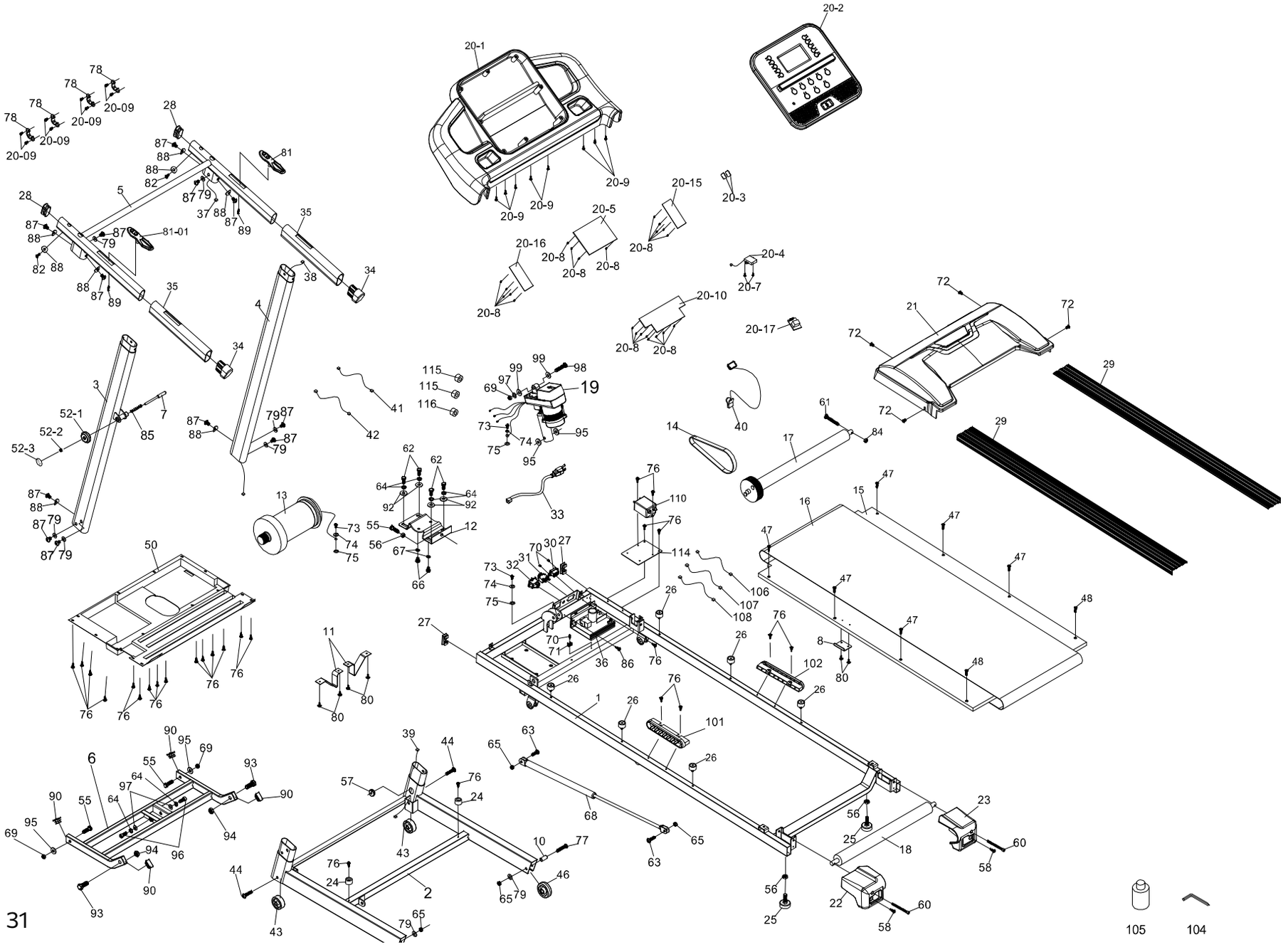

PARTS LIST

001	Main Frame	1
002	Frame Base	1
003	Left Upright	1
004	Right Upright	1
005	Console Support	1
006	Incline Bracket	1
007	Folding Release Pin	1
008	L-Plate	1
010	Wheel Sleeve	2
011	Belt Guide	2
012	Motor Bracket	1
013	Drive Motor	1
014	Drive Belt	1
015	Running Deck	1
016	Running Belt	1
017	Front Roller W/Pulley	1
018	Rear Roller	1
019	Incline Motor	1
020-01	Console Outer Cover	1
020-02	Console Top Cover	1
020-03	Square Magnet Stop Plate	2
020-04	400m/m_Safety Switch Module W/ Cable	1
020-05	Console Display Board	1
020-07	3 × 10m/m_Sheet Metal Screw	2
020-08	2.3 × 6m/m_Sheet Metal Screw	22
020-09	3.5 × 12m/m_Sheet Metal Screw	16

020-10	Key Board	1
020-15	Key Board(incline)	1
020-16	Key Board(speed)	1
020-17	Bluetooth	1
021	Motor Top Cover	1
022	Rear Adjustment Base (L)	1
023	Rear Adjustment Base (R)	1
024	Rubber Foot Pad	2
025	Adjustment Foot Pad	2
026	Rubber Foot	6
027	20m/m × 40m/m_Square End Cap	2
028	Oval End Cap	2
029	Foot Rail	2
030	Power Socket	1
031	Breaker	1
032	AC Electronic Module	1
033	Power Cord	1
034	End Cap	2
035	Handgrip Foam	2
036	Motor Controller	1
037	1000m/m_Computer Cable (Upper)	1
038	1150m/m_Computer Cable (Middle)	1
039	1000m/m_Computer Cable (Lower)	1
040	Square Safety Key	1
041	100m/m_Connecting Wire (Black)	1
042	300m/m_Connecting Wire (White)	1

PARTS LIST

043	Frame Base Front Wheel	2
044	5/16" × 1-1/2"_Button Head Socket Bolt	2
046	Transportation Wheel	2
047	M6 × 20m/m_Flat Head Socket Screw	6
048	M6 × 25m/m_Flat Head Socket Screw	2
050	Frame Cover	1
052-01	Locking Knob	1
052-02	M6 × 6T_Nylon Nut	1
052-03	Label	1
055	3/8" × 1-1/4"_Hex Head Bolt	3
056	3/8" × 7T_Nut	3
057	Wire Protective Rubber	1
058	5 × 19m/m_Tapping Screw	2
060	1/4" × 80m/m_Socket Head Cap Bolt	2
061	1/4" × UNC20 × 2-1/4"_Hex Head Bolt	1
062	3/8" × 3/4"_Hex Head Bolt	4
063	5/16" × 1"_Button Head Socket Bolt	2
064	Ø10 × 2.0T_Split Washer	6
065	5/16" × 7T_Nylon Nut	4
066	M8 × P1.25 × 12m/m_Hex Head Bolt	2
067	Ø8 × 1.5T_Split Washer	2
068	Cylinder	1
069	3/8" × 7T_Nylon Nut	3
070	3.5 × 16m/m_Tapping Screw	3
071	Wire Tie Mount	1

072	M5 × 15m/m_Phillips Head Screw	4
073	M5 × 10m/m_Phillips Head Screw	3
074	Ø5 × 1.5T_Split Washer	3
075	M5_Star Washer	3
076	Ø5 × 16m/m_Tapping Screw	26
077	5/16” × 42mm_Button Head Socket Bolt	2
078	Console Bracket Anchor	4
079	Ø5/16" × Ø18 × 1.5T_Flat Washer	8
080	4 × 12m/m_Sheet Metal Screw	6
081	1200m/m_Speed/Hand Pulse Complex	1
081-01	1200m/m_Incline/Hand Pulse Complex	1
082	5 × 16m/m_Tapping Screw	2
084	1/4" × 5T_Nylon Nut	1
085	Ø9.1 × 53m/m_Constrict Spring	1
086	5 × 25m/m_Tapping Screw	1
087	5/16" × 1/2"_Button Head Socket Bolt	12
088	Ø8 × 23 × 1.5T_Curved Washer	8
089	Ø3 × 50m/m_Flat Head Socket Bolt	2
090	15 × 30m/m_Square End Cap	4
092	Ø3/8" × Ø25 × 2.0T_Flat Washer	4
093	1/2" × UNC12 × 1-1/4"_Hex Head Bolt	2
094	1/2" × 8T_Nylon Nut	2
095	Ø24 × Ø10 × 3T_Nylon Washer (A)	4
096	3/8" × 22m/m_Socket Head Cap Bolt	2
097	Ø3/8" × Ø19 × 1.5T_Flat Washer	3

PARTS LIST

098	3/8" × 1-3/4"_Hex Head Bolt	1
099	Ø10 × Ø25 × 0.8T_Nylon Washer	2
101	Cushion Spacer (L)	1
102	Cushion Spacer (R)	1
104	M5_Allen Wrench Head Screw Wrench	1
105	Lubricant	1
106	300m/m_Connecting Wire (Black)	1
107	200m/m_Connecting Wire (White)	1
108	200m/m_Connecting Wire (Black)	1
110	Filter	1
114	Fixing Plate	1
115	Ferrite Core	2
116	Ferrite Core	1

WARRANTY - RESIDENTIAL

Effective April 09, 2024- **TRX1200 Treadmill LIMITED WARRANTY**

XTERRA Fitness Inc. warrants all its home use Treadmill parts for a period of time listed below, from the date of retail sale, as determined by a sales receipt or in the absence of a sales receipt, eighteen (18) months from the original factory shipping date. XTERRA Fitness's responsibilities include providing new or remanufactured parts, at XTERRA Fitness's option, and technical support to our independent dealers and servicing organizations. In the absence of a dealer or service organization, these warranties will be administered by XTERRA Fitness directly to a consumer. The warranty period applies to the following components:

Home Use Limited Warranty

Warranty	Frame	Motor	Deck & Parts	Labor
Residential	Lifetime	1 Year	90 Days	90 Days

RESPONSIBILITIES OF THE CONSUMER

This warranty applies only to products in ordinary household use, and the consumer/facility is responsible for the items listed below:

1. Proper use of the Treadmill in accordance with the instructions provided in this manual
2. Proper installation in accordance with instructions provided with the Treadmill and with all local electric codes.
3. Expenses for making the Treadmill accessible for servicing, including any item that was not part of the Treadmill at the time it was shipped from the factory.
4. Damages to the Treadmill finish during shipping, installation or following installation.
5. Routine maintenance of this unit as specified in this manual.

WARRANTY - CONTINUED

What is not covered?

EXCLUSIONS

This warranty does not cover the following:

1. CONSEQUENTIAL, COLLATERAL, OR INCIDENTAL DAMAGES SUCH AS PROPERTY DAMAGE AND INCIDENTAL EXPENSES RESULTING FROM ANY BREACH OF THIS WRITTEN OR ANY IMPLIED WARRANTY.
   Note: Some states do not allow the exclusion or limitation of incidental or consequential damages, so this limitation or exclusion may not apply to you.
2. Service call reimbursement to the consumer. Service call reimbursement to the dealer that does not involve malfunction or defects in workmanship or material, for units that are beyond the warranty period, for units that are beyond the service call reimbursement period, for Treadmill not requiring component replacement, or Treadmill not in ordinary household or light commercial use.
3. Damages caused by services performed by persons other than authorized XTERRA Fitness service companies; use of parts other than original XTERRA Fitness parts; or external causes such as corrosion, discoloration of paint or plastic, alterations, modifications, abuse, misuse, accident, improper maintenance, inadequate power supply, or acts of God.
4. Products with original serial numbers that have been removed or altered.
5. Products that have been: sold, transferred, bartered, or given to a third party.
6. XTERRA Fitness reserves the right to request proof of purchase if no warranty record exists for the product.
7. THIS WARRANTY IS EXPRESSLY IN LIEU OF ALL OTHER WARRANTIES EXPRESSED OR IMPLIED, INCLUDING THE WARRANTIES OF MERCHANTABILITY AND/OR FITNESS FOR A PARTICULAR PURPOSE.
8. Product use in any environment other than a residential setting or non-dues paying facility with 5 hours use or less per day.
9. Warranties outside of the United States may vary. Please contact your local dealer for details.

Product features or specifications as described or illustrated are subject to change without notice. All warranties are made by XTERRA Fitness, Inc. This warranty applies only in the 48 contiguous United States. NOTE: This does not include Alaska or Hawaii.

WARRANTY - CONTINUED

Responsibilities of the Owner

SERVICE

Keep your bill of sale. Twelve (12) months from the date on the bill of sale or eighteen (18) months from the date of factory shipping as determined by the serial number establishes the labor warranty period should service be required. If service is performed, it is in your best interest to obtain and keep all receipts. This written warranty gives you specific legal rights. You may also have other rights that vary from state to state. Service under this warranty must be obtained by following these steps, in order:

1. Contact your selling authorized XTERRA Fitness dealer. OR
2. Contact your local authorized XTERRA Fitness service organization.
3. If there is a question as to where to obtain service, contact our service department at (870) 935-1107.
4. XTERRA Fitness' obligation under this warranty is limited to repairing or replacing, at XTERRA Fitness' option, the product through one of our authorized service centers. All repairs must be preauthorized by XTERRA Fitness. If the product is shipped to a service center freight charges to and from the service center will be the customer's responsibility. For replacement parts shipped while the product is under warranty, the customer will be responsible for shipping and handling charges. For in-home service, the customer will be responsible for a trip charge. There will be an additional trip charge if the customer is located over 100 miles from the nearest service center.
5. The owner is responsible for adequate packaging upon return to XTERRA Fitness. XTERRA Fitness is not responsible for damages in shipping. Make all freight damage claims with the appropriate freight carrier. DO NOT SHIP ANY UNIT TO OUR FACTORY WITHOUT A RETURN AUTHORIZATION NUMBER. All units arriving without a return authorization number will be refused.

For any further information, or to contact our service department by mail, send your correspondence to:

XTERRA Fitness, Inc.

P.O. Box 2037

Jonesboro, AR 72402-2037

Product features or specifications as described or illustrated are subject to change without notice. All warranties are made by XTERRA Fitness, Inc. This warranty applies only in the 48 contiguous United States. NOTE: This does not apply to Alaska or Hawaii.

TROUBLESHOOTING

Problem	Meaning	Solution/Cause
Console Showing LUBE	Reminder to check lubrication under walking deck	1. Check lubrication under walking belt. Reference belt deck lubrication procedure on page 29. 2. Hold PROGRAM button for 3 seconds to reset
Console Showing E1	Console shows E1 8~10 seconds after pressing “Start” button.	1. Does the motor run after “Start” button is pressed? 2. Connector could be loose. 3. Check the cable connecting the console and controller for proper connection.
Console Showing E0	Safety Switch Malfunction	1. If safety key switch is placed properly? 2. Is safety harness I the console connected properly? Any connector damaged? 3. Is safety switch defective?
Console Showing E2	Over Current Protection Treadmill over loaded, controller protection is activated.	1. Check for proper walking belt alignment. Make sure to lubricate belt periodically to minimize resistance. 2. Is there any bearing damage? 3. Has the motor overheated?
Console Showing E4	Improper Motor input voltage. Motor is not connected properly.	1. Motor is not connected properly or not connected to the controller.
Console Showing E5	Communication disconnected between the console and the controller or communication error	1. Check for proper connection between the console and controller.
Console Showing E6	Controller Malfunction	1. Controller component failure
Console Showing E7	Abnormal Power Input	1. Check for proper voltage input for treadmill.

3000 Nestle Road Jonesboro, AR 72401 | Phone: 800-258-8511 | Fax: 870-935-7611

©2023 All Rights Reserved. TRX1200 Owner's Manual