XTERRA FITNESS

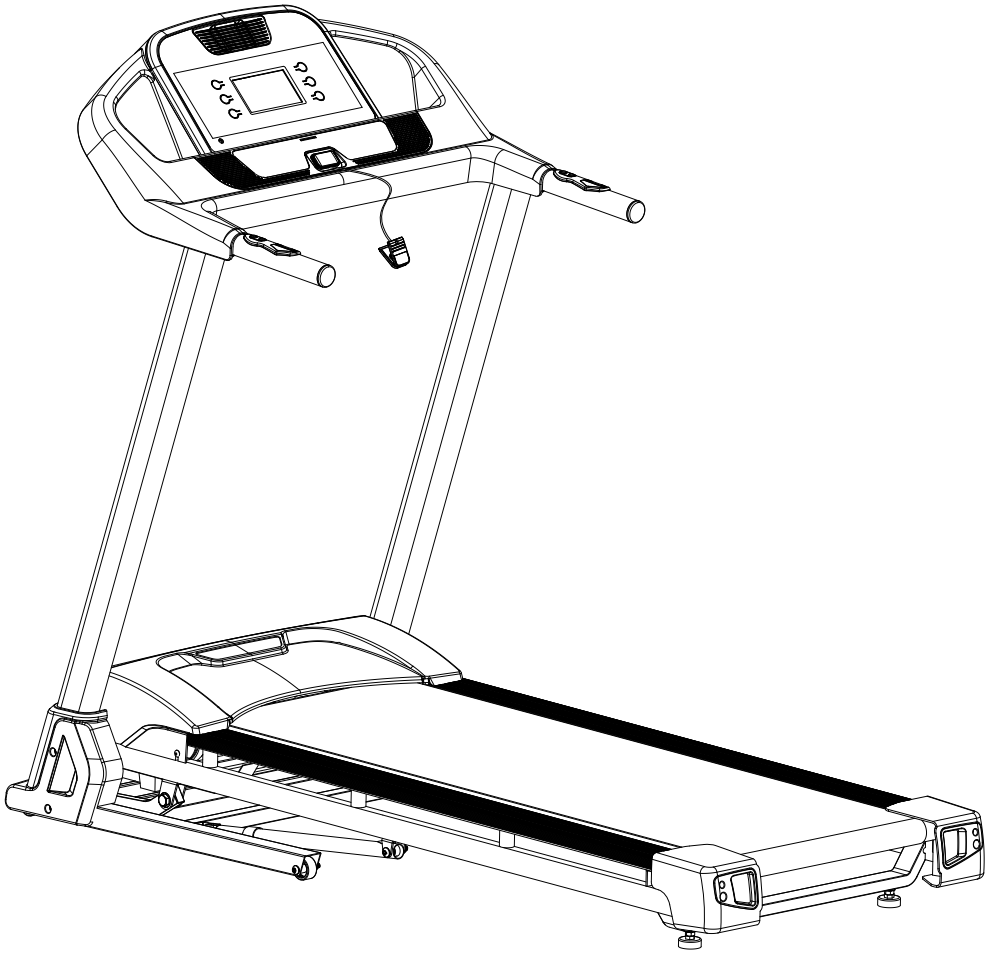

TRX1400 TREADMILL

TRX1400_OwnersManual_140082_20260713

Online Support

If you require assistance or are experiencing issues with your XTERRA Machine, please contact customer care for additional help.

1-800-258-8511

questions@xterrafitness.com

Warranty Registration

Scan to quickly and easily register your new XTERRA Fitness machine.

Table of Contents

Product Registration 3

Warning / Safety Instructions

Product Labels 4

Safety Instructions 5

Electrical Safety 6

Grounding & Location Requirements 7

Parts and Assembly

Parts Included 8

Pre-Assembly 9

Assembly 10

Setting Up Your Unit 14

Safety Key 16

Technology and Features

About Your Machine 17

Console Screen - Overview 18

Features 19

Using the XF Connect App 20

Programs

Programs Intro 21

Heart Rate Exertion 24

Maintenance

Maintenance & Care 27

Deck Lubrication 29

Belt & Deck Cleaning 30

Engineering Mode 31

Exploded View Diagram 32

Parts List 33

Warranty & Troubleshooting

Warranty 35

Troubleshooting 38

PRODUCT REGISTRATION

Congratulations on your new treadmill, and welcome to the XTERRA Fitness family!

Thank you for your purchase of this quality unit from XTERRA Fitness. Your new unit was manufactured by one of the leading fitness manufacturers in the world and is backed by one of the most comprehensive warranties available. XTERRA Fitness will do all we can to make your ownership experience as pleasant as possible for many years to come.

If you have questions, or if parts are missing or damaged, or you require customer service, call (870) 336-4286. Please have your model number and serial number handy when you call.

Please take a moment at this time to record the name of the dealer, their telephone number, and the date of purchase below to make any future, needed contact easy. We appreciate your support and we will always remember that you are the reason that we are in business.

Serial Number	
Date of Purchase	
Dealer / Place of Purchase	

WARRANTY REGISTRATION

Use your smartphone to scan the QR code above to quickly and easily register your new XTERRA Fitness machine.

You can also go to **xterrafitness.com/warranty** under the Support tab to register online.

Version: 3.0
Revision: 07/13/26

PRODUCT LABELS

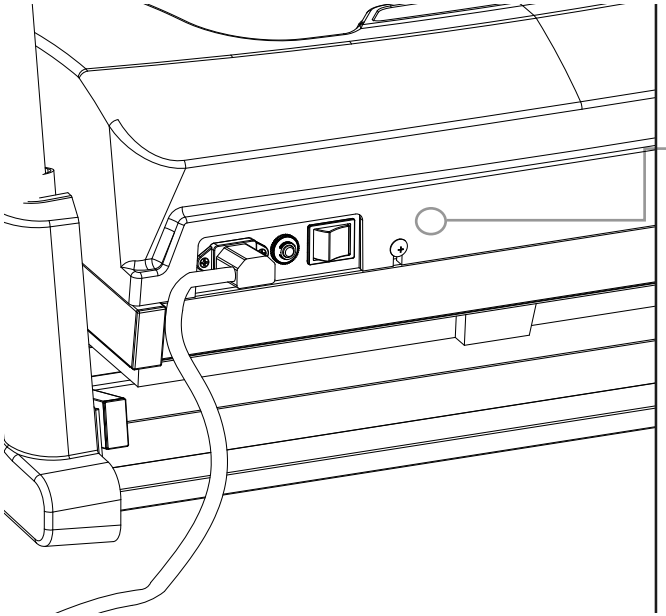

SERIAL NUMBER

XTERRA

(870)336-4286

SERIAL NUMBER STICKER

This sticker will be found on the rear of the motor cover. Please record the number below the barcode for the purpose of registering your treadmill's warranty.

WARNING: Cancer and Reproductive Harm - www.P65Warnings.ca.gov

PROPOSITION 65 WARNING

This sticker will be found on the rear of the motor cover. The State of California requires us to inform you that this unit was manufactured using chemicals that could cause harm with improper use.



SAFETY WARNING STICKER

This sticker will be found on the interior side of your treadmill's upright. The same warning can be found in this manual. Please read and be aware of the precautions before operating your unit.

WARNING AVERTISSEMENT

SERIOUS INJURY COULD OCCUR IF THESE PRECAUTIONS ARE NOT OBSERVED.

- Consult your physician before use.
- Stop immediately if you become dizzy or experience chest pains and consult your physician.
- Heart Rate monitoring systems can be inaccurate; use them for reference only.
- Read all warnings on the unit and be properly instructed or read the Owner's Manual on how to use before beginning.
- Inspect this machine for damage prior to use.
- Keep body, clothing, and fitness accessories clear of moving parts.
- Risk of personal injury – Keep children under the age of 13 away from machine.

Le non respect de ces directives pourrait entraîner des blessures graves, voir mortelles:

- Consultez votre médecin avant de l'utiliser.
- Arrêtez immédiatement en cas d'étourdissements ou des douleurs à la poitrine et consultez votre médecin.
- Les lectures de fréquence cardiaque peuvent être inexactes; utiliser à titre indicatif seulement.
- Lisez tous les avertissements et les instructions sur l'appareil et dans le manuel du propriétaire avant l'utilisation.
- Inspectez cet appareil pour tout dommages avant de l'utiliser.
- Garder le corps, les vêtements et accessoires d'entraînement à l'écart des pièces mobiles.
- Risque de blessures- gardez les enfants âgés de moins de 13 ans loin de l'appareil.

SAFETY INSTRUCTIONS

When using an electrical appliance, basic precautions should always be followed, including the following:
Read all instructions before using this appliance.

DANGER - To reduce the risk of electric shock:
Always unplug this appliance from the electrical outlet immediately after using and before cleaning.

WARNING - To reduce the risk of burns, fire electric shock, or injury to persons:

1. An appliance should never be left unattended when plugged in. Unplug from outlet when not in use, and before putting on or taking off parts.
2. Do not operate under blanket or pillow. Excessive heating can occur and cause fire, electric shock, or injury to persons.
3. This exercise equipment is not intended for use by persons with reduced physical, sensory or mental capabilities, or lack of experience and knowledge.
4. Use this appliance only for its intended use as described in this manual. Do not use attachments not recommended by the manufacturer.
5. Never operate this appliance if it has a damaged cord or plug, if it is not working properly, if it has been dropped or damaged, or dropped into water. Return the appliance to a service center for examination and repair.
6. Do not carry this appliance by supply cord or use cord as a handle.
7. Keep the cord away from heated surfaces.
8. Never operate the appliance with the air openings blocked. Keep the air openings free of lint, hair, and the like.
9. Never drop or insert any object into any opening.
10. Do not use outdoors.
11. Do not operate where aerosol (spray) products are being use or where oxygen is being administered.
12. Connect this appliance to a properly grounded outlet only. See Grounding Instructions.
13. The appliance is intended for household use.
14. To disconnect, turn all controls to the off position, then remove the plug from the outlet.
15. Do not operate equipment on deeply padded, plush or shag carpet. Damage to both carpet and equipment may result.
16. Before beginning this or any exercise program, consult a physician. This is especially important for persons over the age of 35 or persons with pre-existing health conditions.
17. Keep hands away from all moving parts.
18. The pulse sensors are not medical devices. Various factors, including the user's movement, may affect the accuracy of heart rate readings. The pulse sensors are intended only as exercise aids in determining heart rate trends in general.
19. Do not attempt to use your equipment for any purpose other than for the purpose it is intended.
20. Wear proper shoes. High heels, dress shoes, sandals or bare feet are not suitable for use on your equipment. Quality athletic shoes are recommended to avoid leg fatigue.
21. **User Weight Limit: 265 lbs.**

Please ensure that you review and adhere to the user weight restrictions and power requirements of your new machine. Failure to do so may result in serious injury or damage to your machine.

ELECTRICAL SAFETY

WARNING!

Route the power cord away from any moving part of the unit including the elevation mechanism and transport wheels.

NEVER remove any cover without first disconnecting AC power. If voltage varies by ten percent (10%) or more, the performance of your unit may be affected. **Such conditions are not covered under your warranty.** If you suspect the voltage is low, contact your local power company or a licensed electrician for proper testing.

NEVER expose this unit to rain or moisture. This product is **NOT** designed for use outdoors, near a pool or spa, or in any other high humidity environment. The temperature specification is 40 degrees C, and humidity is 95%, non-condensing (no water drops forming on surfaces).

Circuit breakers: Avoid AFCI/GFCI circuit breakers if possible. These breakers may trip occasionally during exercise because of the high inrush currents of the unit drive electronics and motor. This is an issue that affects all unit brands. New laws in your area may require these breakers. If you do have these breakers and outlets in your home, and are experiencing nuisance tripping, you should check if there are any other devices plugged into the same circuit. Some examples of devices that may also cause tripping are fluorescent lights with electronic ballasts, coffee maker, space heater, hair drier.

Optimally the unit should be the only device plugged into the circuit. Our units have surge suppressors built in to help avoid nuisance tripping. We have tested several AFCI/GFCI breakers and outlets with our products. Brands we have tested are: Eaton (Cutler Hammer Series), Leviton (Smart lock pro) and Schneider Electric (Canadian home series). These breakers do not trip in our testing, when connected to our units, as long as no other devices are plugged into the same circuit.

- **NEVER** operate this unit without reading and completely understanding the results of any operational change you request from the computer.
- Understand that changes in speed and incline do not occur immediately. Set your desired work level on the computer console and release the adjustment key. The computer will obey the command gradually.
- **NEVER** use your unit during an electrical storm. Surges may occur in your household power supply that could damage unit components. Unplug the unit during an electrical storm as a precaution.
- Use caution while participating in other activities while walking on your unit; such as watching television, reading, etc. These distractions may cause you to lose balance which may result in serious injury.
- Do not use excessive pressure on console control keys. They are precision set to function properly with little finger pressure.

GROUNDING & LOCATION REQUIREMENTS

This product must be grounded. If the unit should malfunction or breakdown, grounding provides a path of least resistance for electric current, reducing the risk of electric shock. This product is equipped with a cord having an equipment-grounding plug. The plug must be plugged into an appropriate outlet that is properly installed and grounded in accordance with all local codes and ordinances.

DANGER - Improper connection of the equipment-grounding conductor can result in a risk of electric shock. Check with a qualified electrician or serviceman if you are in doubt as to whether the product is properly grounded. Do not modify the plug provided with the product if it will not fit the outlet; have a proper outlet installed by a qualified electrician.

This product is for use on a nominal 110-volt circuit, and has a grounding plug that looks like the plug illustrated below. A temporary adapter that looks like the adapter illustrated below may be used to connect this plug to a 2-pole receptacle as shown below if a properly grounded outlet is not available. The temporary adapter should be used only until a properly grounded outlet, (shown below) can be installed by a qualified electrician. The green colored rigid ear-lug, or the like, extending from the adapter, must be connected to a permanent ground such as a properly grounded outlet box cover. Whenever the adapter is used, it must be held in place by a metal screw.

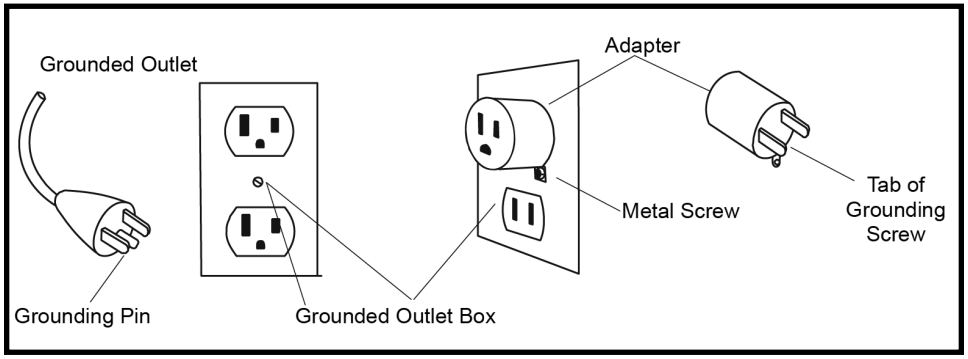

Location Requirements

After assembling your treadmill, you'll need to make sure you've installed it in a safe area.

- We recommend that you leave an area of at least 20in on the front, and sides of your machine. The front of the unit is where the motor is located.
- We recommend that you leave an area of at least 6ft behind the treadmill.
- Install your treadmill in an area where children and pets cannot access it.
- Always keep the area around your treadmill clear of furniture, exercise equipment and other debris.
- Do not install your treadmill on deeply padded, plush, or shag carpet.

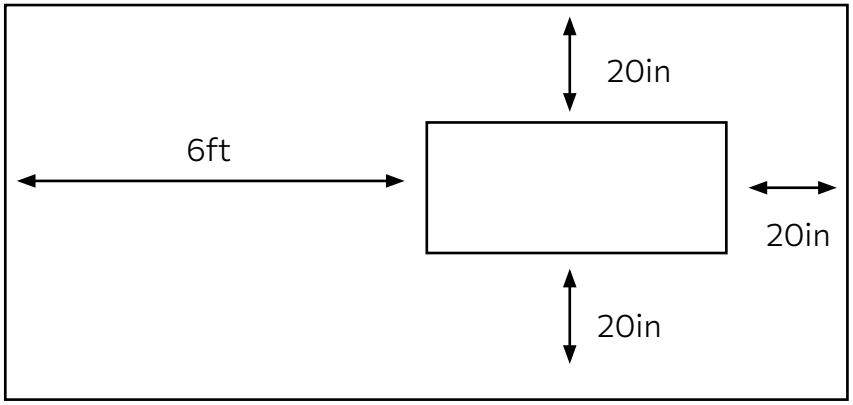

PARTS INCLUDED

TOOLS INCLUDED:

- ❑ Combination M5 Allen Wrench & Phillips Head Screwdriver

PARTS INCLUDED:

- ❑ 1 Main Frame
- ❑ 2 Uprights
- ❑ 2 Frame Base Covers
- ❑ 1 Console
- ❑ 1 Deck
- ❑ 1 Power Cord
- ❑ 1 Lubricant
- ❑ 1 Hardware Kit

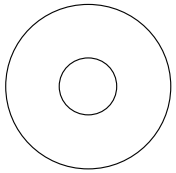

#95. Ø8 × Ø23 × 1.5T
Curved Washer(6pcs)

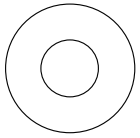

#79. Ø8 × Ø18 × 1.5m/m
Flat Washer(4pcs)

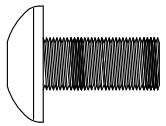

#94. 5/16" × UNC18 × 1/2"
Button Head Socket Bolt (10pcs)

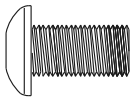

#83. M5 × 15L
Phillips Head Screw (4pcs)

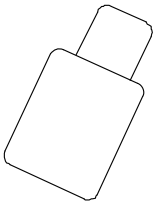

#105. Lubricant (1pc)

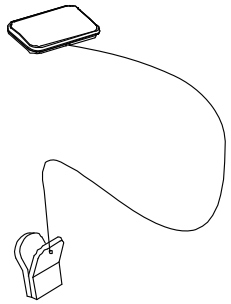

#48. Safety Key (1pc)

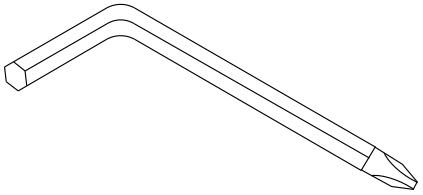

#104. Combination M5 Allen Wrench & Phillips Head Screw Driver (1pc)

PRE-ASSEMBLY

WARNING: There is a Velcro strap installed around the treadmill base that prevents the unit from unfolding accidentally during shipping. If this strap is not removed properly the treadmill could spring open unexpectedly and cause injury if someone is standing near the unit when the strap is removed.

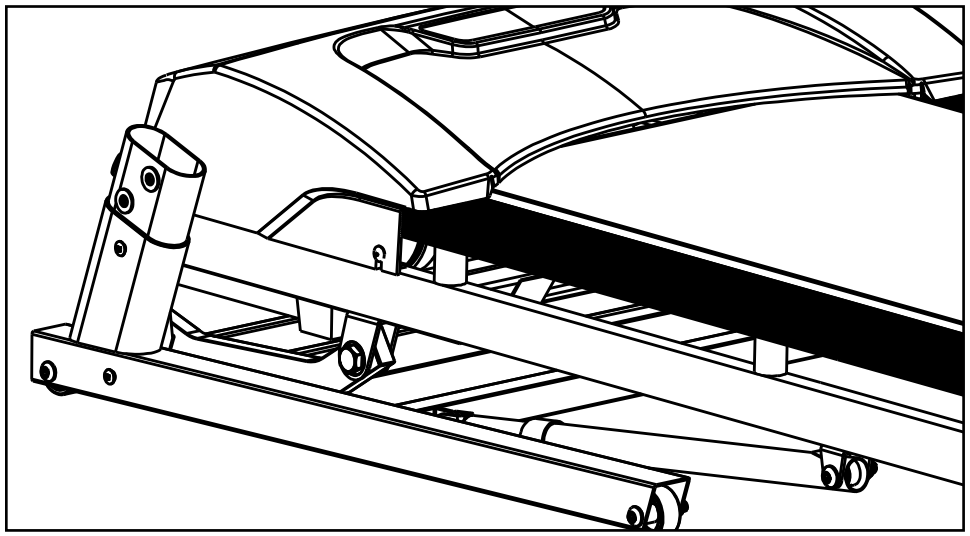

To ensure your personal safety during removal of the shipping strap please make sure the treadmill is positioned flat on the ground, in the orientation it would be in if you were using the treadmill. Do not turn the treadmill up on its side while removing the shipping strap. This could cause the unit's folding mechanism to spring open. If the end of the Velcro strap (that you need to grab to remove it) happens to be under the treadmill deck, reach under the deck to grab it, but do not tilt the treadmill up to gain access to the strap end.

1. Cut the straps, then lift the box over the unit and unpack.
2. Carefully remove all parts from the carton and inspect for any damage or missing parts. If parts are damaged or missing, contact your dealer immediately.
3. Locate the hardware package. Remove the tools first.
4. Remove the hardware for each step as needed to avoid confusion. The numbers in the instructions that are in parenthesis (#) are the item number from the assembly drawing for reference.

ASSEMBLY

1. Take out the treadmill from the carton and lay it aside on the smooth ground.

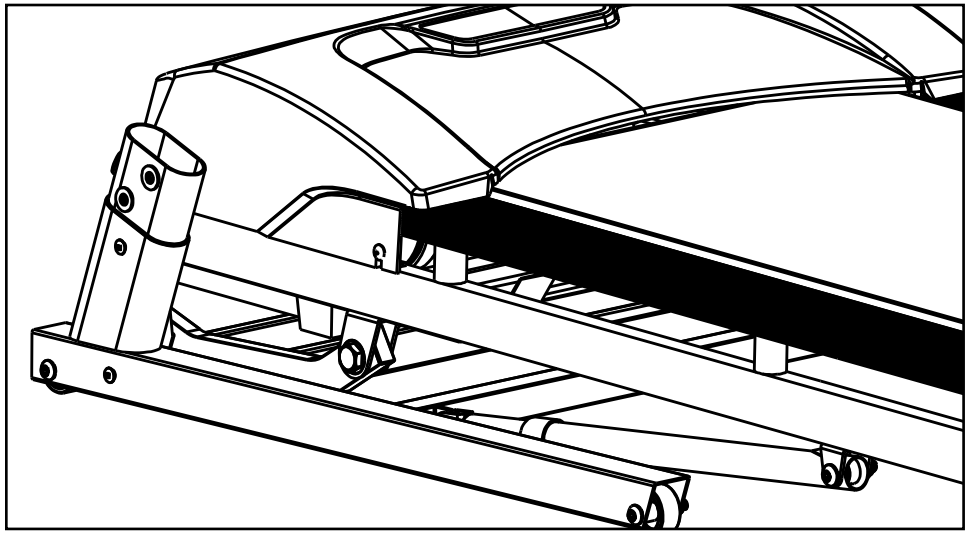

2. Connect the **Computer Cable (Middle) (47)** with the **Computer Cable (Lower)(45)**.

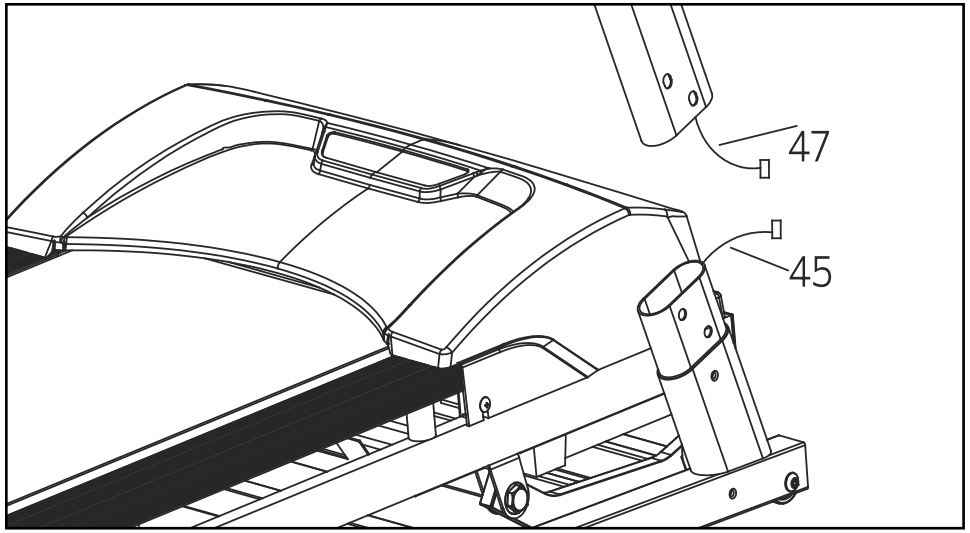

ASSEMBLY - CONTINUED

3. Insert the **Uprights (L, R)(3,4)** into the **Frame Base (2)** with the 6pcs of **5/16" × 1/2" Button Head Socket Bolts (94)**,4pcs of **Ø5/16" × Ø18 × 1.5T Flat Washers (79)** and 2pcs of **Ø8 × Ø23 × 1.5T Curved Washers (95)**by using the **Combination M5 Allen Wrench & Phillips Head Screw Driver (104)**.

   Please fix the screw without tightening it.

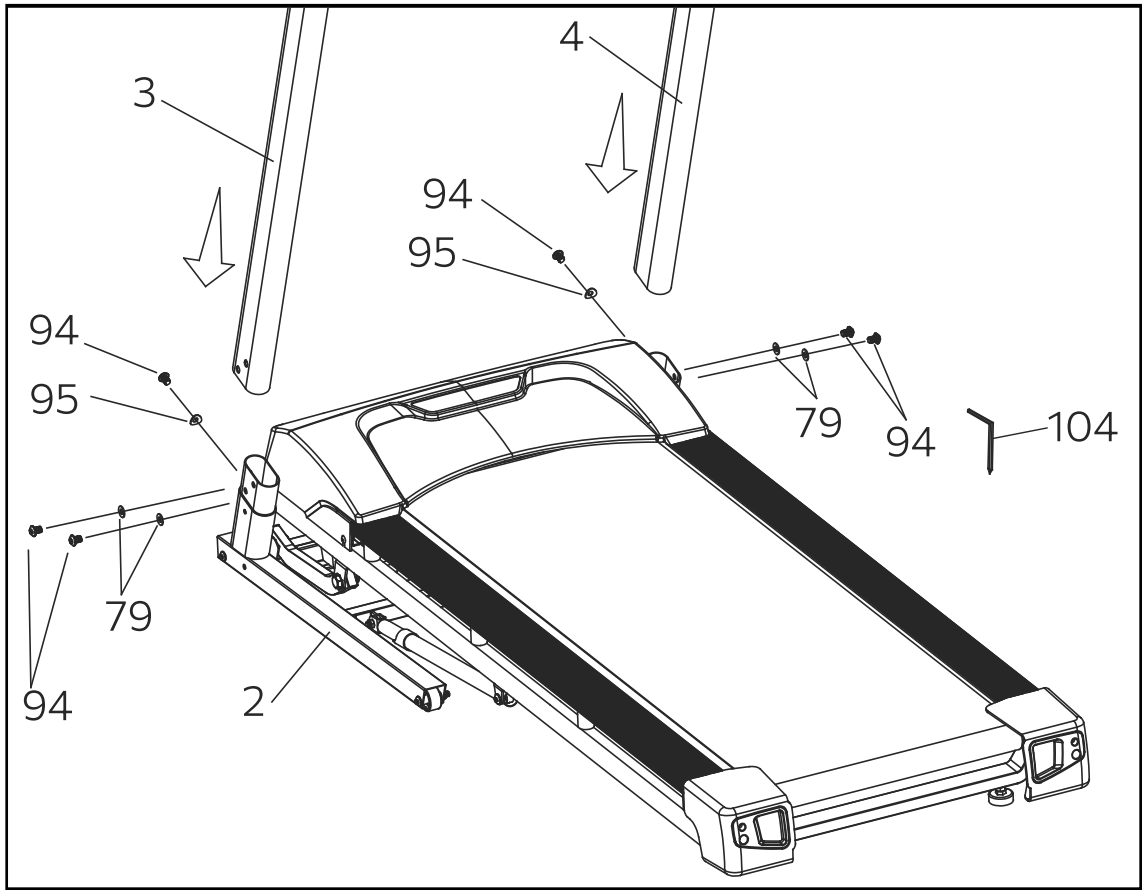

ASSEMBLY - CONTINUED

4. Connect the **Computer Cable (Upper) (46)** with the **Computer Cable (Middle)(47)**.

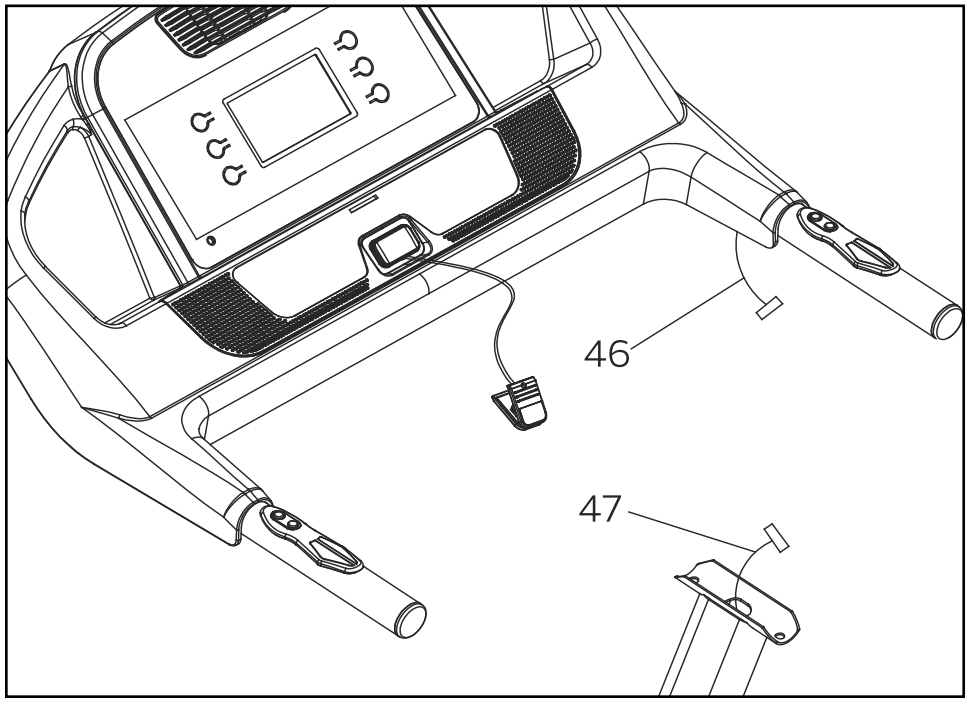

ASSEMBLY - CONTINUED

5. Install the **Console Support (5)** into the **Uprights (L,R)(3,4)** with the 4pcs of **5/16" × 1/2" Button Head Socket Bolts (94)** and 4pcs of **Ø8 × Ø23 × 1.5T Curved Washers (95)** by using the **Combination M5 Allen Wrench & Phillips Head Screw Driver (104)**.

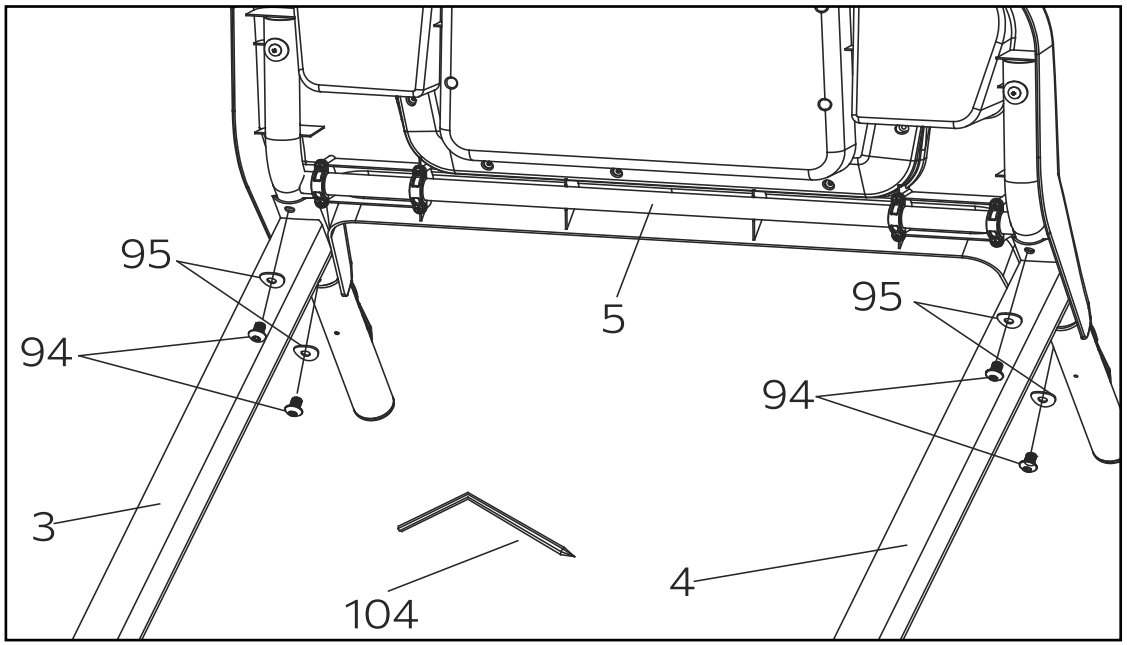

6. Install the left and right **Frame Base Covers (24, 25)** on the frame base and the uprights respectively fix by tightening four pieces of **M5 × 15m/m Phillips Head Screws (83)** with **Combination M5 Allen Wrench & Phillips Head Screw Driver (104)**.

NOTE: Please Tighten All Screws After All Components Assembly is Complete.

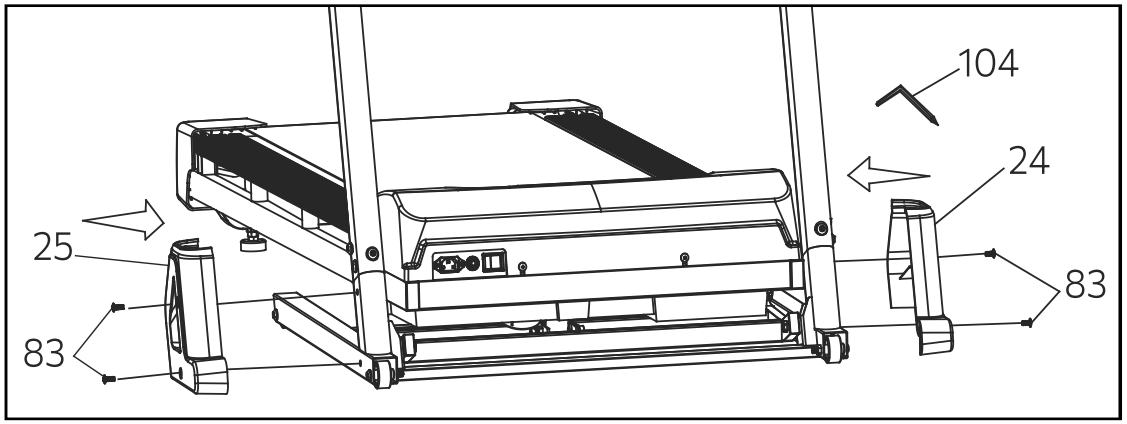

SETTING UP YOUR TREAD

Leveling

Use a M14 Wrench to adjust the height of the Leveling Feet.

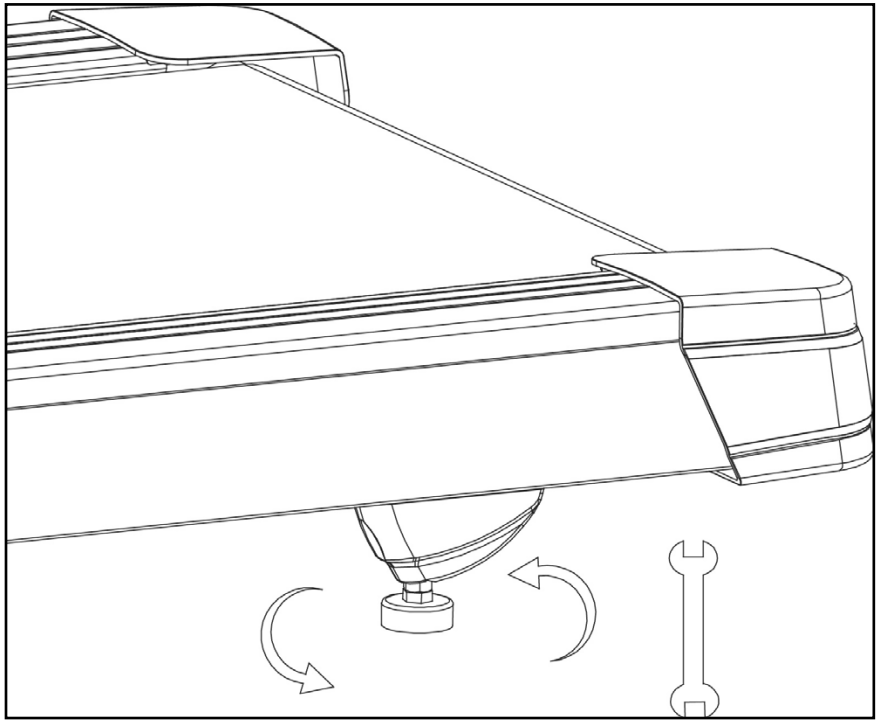

Plugging in and Powering On

Power the unit on by plugging it into an appropriate wall outlet, then turn on the power switch located at the front of the treadmill below the motor hood, Ensure that the Safety Key is installed, as the treadmill will not power on without it. When the power is turned on, all the lights on the display will light up for a short time and the console will show the software version.
The treadmill will then enter idle mode, which is the starting point for operation.

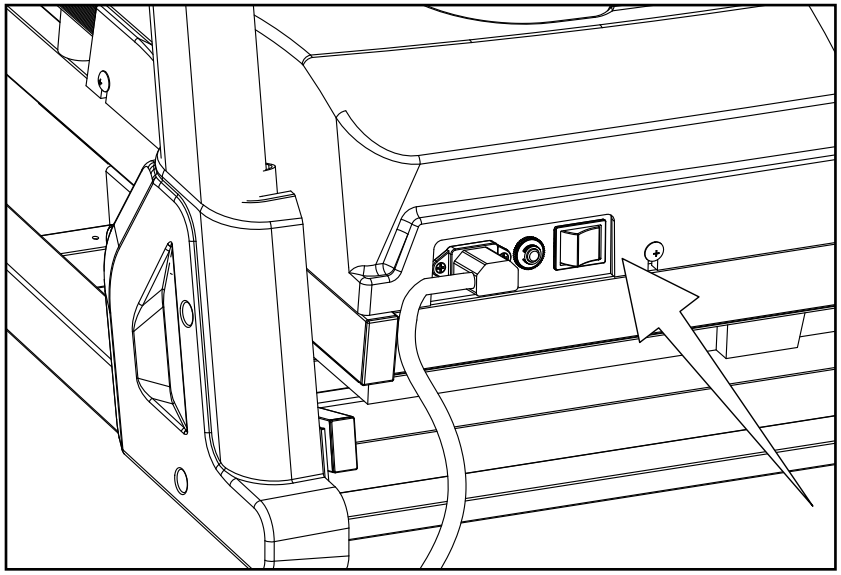

SETTING UP YOUR TREAD - CONTINUED

Folding Your Treadmill

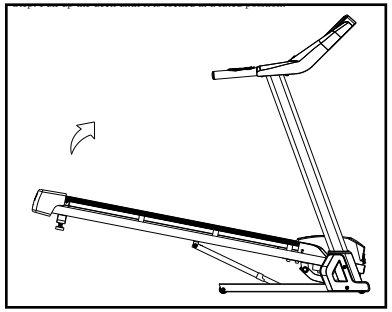

Lift the deck until the latch clicks in place.

Unfolding Your Treadmill

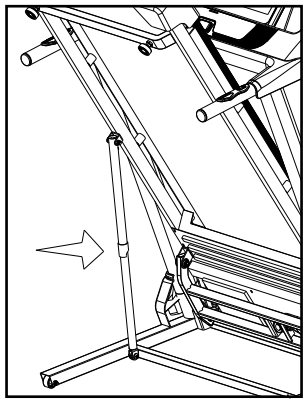

Press the releasing switch with your foot and pull down the running deck.

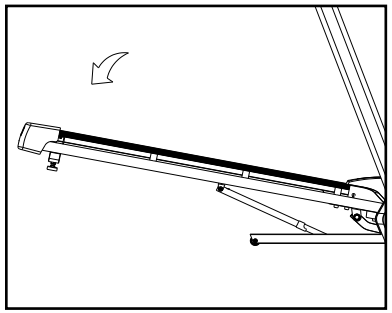

Gently lower the deck to the floor, supporting the deck with a hand.

Moving The Treadmill

The treadmill is equipped with four transport wheels that are engaged when folded. After folding, simply roll the unit away. No need to tilt.

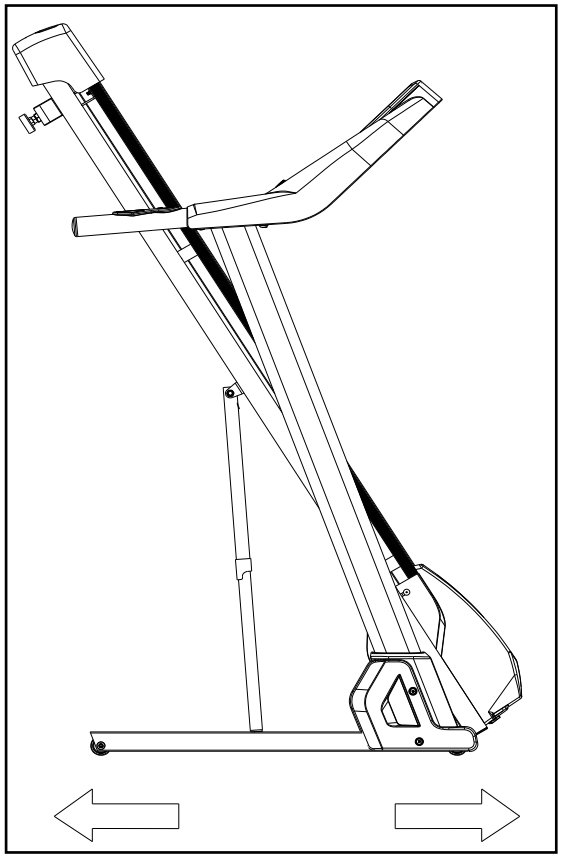

SAFETY KEY

A safety tether cord is provided with this unit.
It is a simple magnetic design that should be used at all times.
It is for your safety should you fall or move too far back on the tread-belt.
Pulling this safety tether cord will stop tread-belt movement.

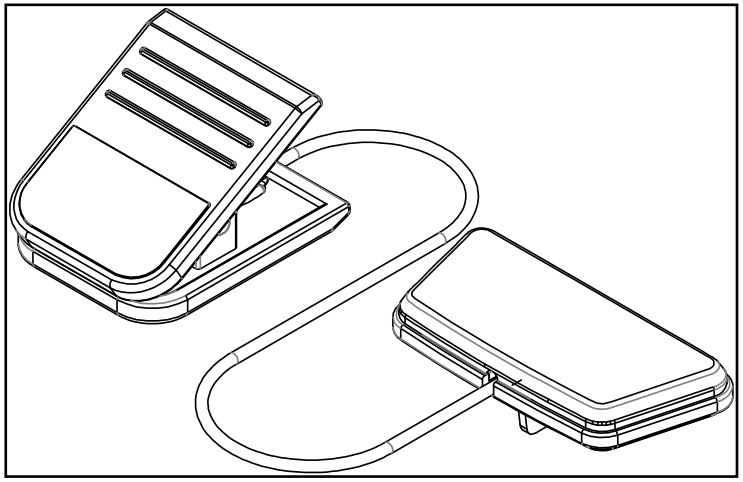

To Use:

1. Place the magnet into position on the round metal portion of the console control head. Your unit will not start and operate without this. Removing the magnet also secures the unit from unauthorized use.
2. Fasten the plastic clip onto your clothing securely to ensure good holding power. Note: The magnet has strong enough power to minimize accidental, unexpected stopping. The clip should be attached securely to make certain it does not come off. Be familiar with its function and limitations. The unit will stop, depending on speed, with a one to two step coast anytime the magnet is pulled off the console. Use the Stop / Pause switch in normal operation.

ABOUT YOUR MACHINE

Always use care and caution when operating your machine. Follow instruction in this manual to ensure safe operation and maintenance of your treadmill

Your new XTERRA Fitness treadmill has Bluetooth connectivity to give you access to the most advanced workout experiences available. Follow the instructions on page 20 to learn more about using the Bluetooth capabilities to their fullest potential.

Downloading the XF Connect app will help unlock more features - such as tracking workouts and sharing data via Google Fit and Apple Fitness. Simply search for "XF Connect" in the app store on your smartphone or tablet, or scan the QR code on the right



The XF Connect app is available on Google Play and the Apple App Store. Scan the QR Code below, and quickly and easily sign up to start taking your workout experience to a whole new level.

Available on the App Store

GET IT ON Google play

Be sure to follow XTERRA Fitness on your favorite social media platforms to view and share the latest fitness videos, images, and news.

facebook.com/XterraFitness

www.instagram.com/XterraFitness

youtube.com/user/XterraFitnessOnline

CONSOLE SCREEN - OVERVIEW

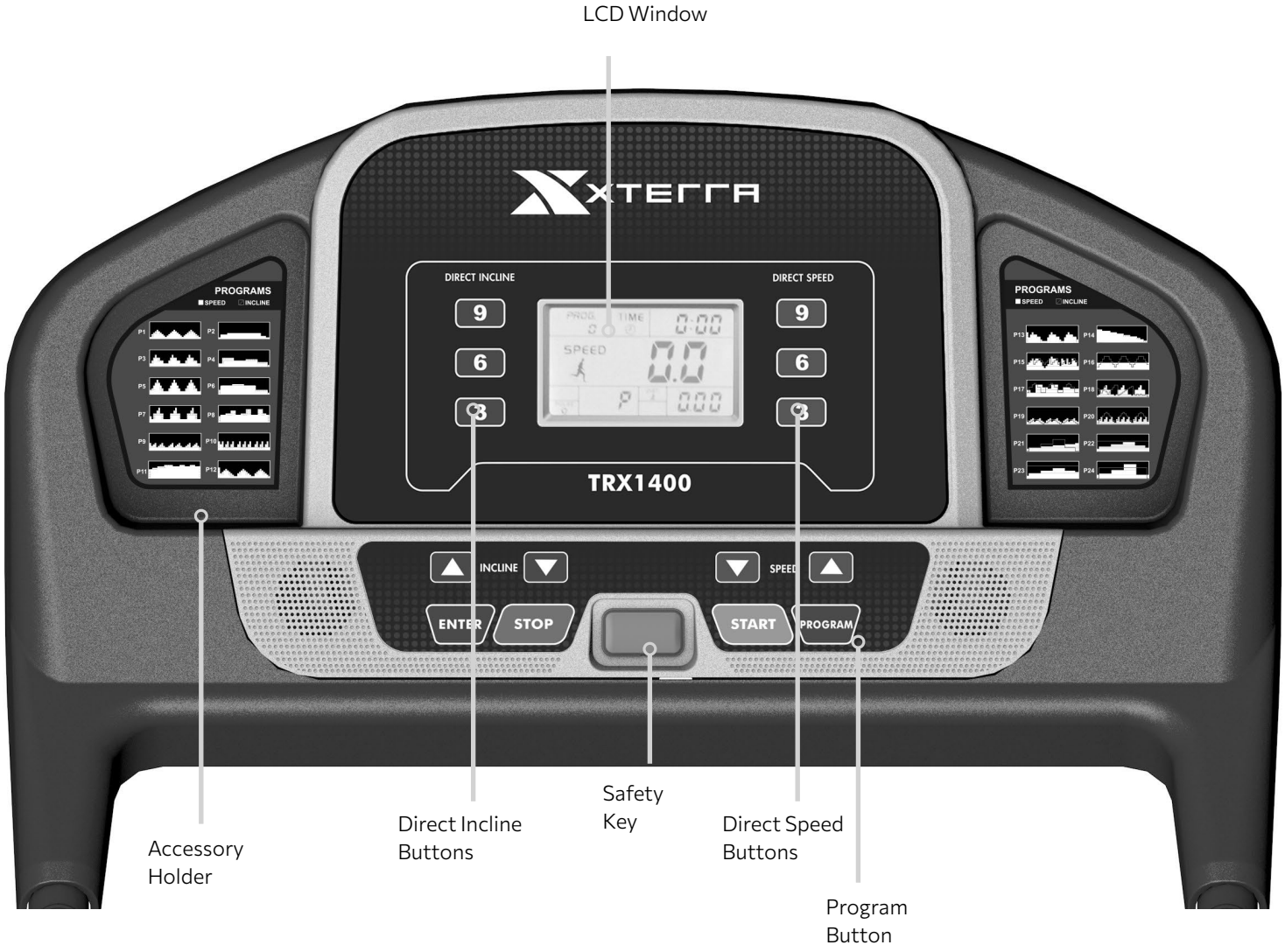

FEATURES

Program

Program Mode selection: In ready mode, scroll to select (P01---P24- -HRC—P01) in sequence.

Enter

In manual mode, scroll to select count down time, count down distance, or count down calorie training mode. In program mode, this button is used for time setting. In HRC mode, this button is used for setting time and target HR.

Stop

During operation, press this button to pause the machine. In setting mode, this button is pressed to return to ready mode or to go back to the previous setting during setting mode.

Start

When the machine is in ready mode, press this button to start operation.

Speed Up

During operation, press the speed up button to increase the speed in increments of 0.1 MPH. Press and hold for continuous increase in speed.

Speed Down

During operation, press the speed decrease button to decrease the speed in increments of 0.1 MPH. Press and hold for continuous decrease in speed.

Direct Speed

You are able to set your speed setting quickly by pressing the 3, 6, or 9 buttons on the console. Simply choose the desired speed (3, 6, 9) on the console and the treadmill will automatically adjust to that speed level.

Incline Up

During operation, press the incline up button to increase the incline level. Press and hold for continuous increase in incline level.

Incline Down

During operation, press the incline down button to decrease the incline level. Press and hold for continuous decrease in incline level.

Direct Incline

You are able to set your incline setting quickly by pressing the 3, 6, or 9 buttons on the console. Simply choose the desired incline (3, 6, 9) on the console and the treadmill will automatically adjust to that incline level.

USING THE XF CONNECT APP

In order to help you achieve your exercise goals, your new exercise machine comes equipped with a Bluetooth® transceiver that will allow it to interact with selected phones or tablet computers via the XF Connect App. Just download the free XF Connect App from the Apple Store or Google Play, and then follow the instructions in the App to sync with your exercise machine.

Press the “DISPLAY” button from the APP to view the display of the current workout data. When your exercise is complete, choose “END & SAVE WORKOUT” to store the workout data.

1. Download the App by scanning the QR code on the right.
2. Open the App on your device (phone or tablet) and make sure Bluetooth® is enabled on your device (phone or tablet).
3. In the App click the Bluetooth® icon to search for your XF Connect equipment.
4. Under the Bluetooth® scan result list, select the machine for connect. When the App and equipment are synced, the Bluetooth® icon on the equipment’s console display will light up. Click “DISPLAY”, you may now start using your XF Connect App.
5. When your exercise is complete, choose “END & SAVE WORKOUT” to store the workout data. You will be prompted to sync your data with each available fitness cloud site. Please note, you will have to download the applicable compatible fitness App, such as Strava, MapMyFitness, Fitbit, etc., in order for the icon to be active and available.

Note: Your device will need to be running on a minimum operating system of IOS 13.1 or Android 8.0 for the XF Connect App to operate properly.



PROGRAMS - TO SELECT AND START A PROGRAM

Press **PROGRAM** after turning power on and enter program mode with the window displaying P01. There are 24 built-in programs.

Press **PROGRAM** to select one program through P01-P24 and enter time setting with the preset time 30 minutes. Press SPEED Up/Down , INCLINE Up / Down to change the value of time within the range 5-99 minutes. Press **START** after setting to begin the workout.

USER DEFINED MODE OPERATION

1. Selecting the count-down training mode: In ready mode, press **ENTER** to enter count-down time mode. Press **ENTER** again to enter count-down distance mode and press **ENTER** the third time to enter count-down calorie mode.
2. Count-down time training mode: In ready mode, press **ENTER** to enter setting mode. Time window will be flashing displaying the preset value 30:00. Press SPEED Up or SPEED Down to change the value with setting range 5—99 minutes. Press **START** to start the treadmill with initial speed of 0.5MPH. Press SPEED+ or SPEED- to change the speed. The treadmill stops automatically when the count-down speed is 0:00.
3. Count-down time training mode: In ready mode, press **ENTER** two times and the distance window flashes displaying the preset value of 5 (MPH). Press SPEED Up or SPEED Down to change the value within setting range 1.00—99 (MPH). Press **START** to start the treadmill with initial speed of 0.5MPH. Press SPEED UP or SPEED Down- to change the speed. The treadmill stops automatically when the count-down distance is 0.00.
4. Count-down calorie training mode: In ready mode, press **ENTER** three times and the calorie window flashes displaying the preset value of 500CAL. Press SPEED Up or SPEED Down to change the value within setting range 10--990CAL Press **START** to start the treadmill with initial speed of 0.5MPH. Press SPEED Up or SPEED Down to change the speed. The treadmill stops automatically when the count-down calorie is 0.

PROGRAMS

HRC Mode Operation

1. Press **PROGRAM** to select H-1 and press **ENTER** to enter HRC mode.
2. Enter the time setting, use the Speed Up / Down key to adjust, and press **ENTER**.
3. Enter the heart rate setting, use the Speed Up / Down key to adjust, and press the **START** button to start. The treadmill will begin to run.
4. After the treadmill is started, the initial speed is 0.5mph, and the speed and incline can be adjusted manually. The treadmill will automatically adjust the incline according to the user's heart rate.
5. You must grip both pulse grips for HR reading during the program.

HEART RATE EXERTION

The old motto, “no pain, no gain”, is a myth that has been overpowered by the benefits of exercising comfortably. A great deal of this success has been promoted by the use of heart rate monitors. With the proper use of a heart rate monitor, many people find that their usual choice of exercise intensity was either too high or too low and exercise is much more enjoyable by maintaining their heart rate in the desired benefit range.

To determine the benefit range in which you wish to train, you must first determine your Maximum Heart Rate. This can be accomplished by using the following formula: 220 minus your age. This will give you the Maximum Heart Rate (MHR)for someone of your age. To determine the effective heart rate range for specific goals you simply calculate a percentage of your MHR. Your Heart rate training zone is 50% to 90% of your maximum heart rate. 60% of your MHR is the recommended for burning fat while 80% is recommended for strengthening the cardio vascular system. This 60% to 80% is the zone to stay in for maximum benefit.

For someone who is 40 years old their
target heart rate zone is calculated:
220 – 40 = 180 (maximum heart rate)
180 x .6 = 108 beats per minute (60% of maximum)
180 X .8 = 144 beats per minute (80% of maximum)
So for a 40 year old the training zone would
be 108 to 144 beats per minute.

If you enter your age during programming the console will perform this calculation automatically. Entering your age is used for the Heart Rate programs. After calculating your MHR you can decide upon which goal you would like to pursue.

The two most popular reasons for, or goals, of exercise are cardiovascular fitness (training for the heart and lungs) and weight control. The black columns on the chart represent the MHR for a person whose age is listed at the bottom of each column. The training heart rate, for either cardiovascular fitness or weight loss, is represented by two different lines that cut diagonally through the chart. A definition of the lines’ goal is in the bottom left-hand corner of the chart. If your goal is cardiovascular fitness or if it is weight loss, it can be achieved by training at 80% or 60%, respectively, of your MHR on a schedule approved by your physician. Consult your physician before participating in any exercise program.

With this Spirit Fitness unit you may use the heart rate monitor feature without using the Heart Rate program. However, when using the heart rate monitor feature in conjunction with the Heart Rate programs, the machine will automatically adjust speed or incline to maintain the desired heart rate.

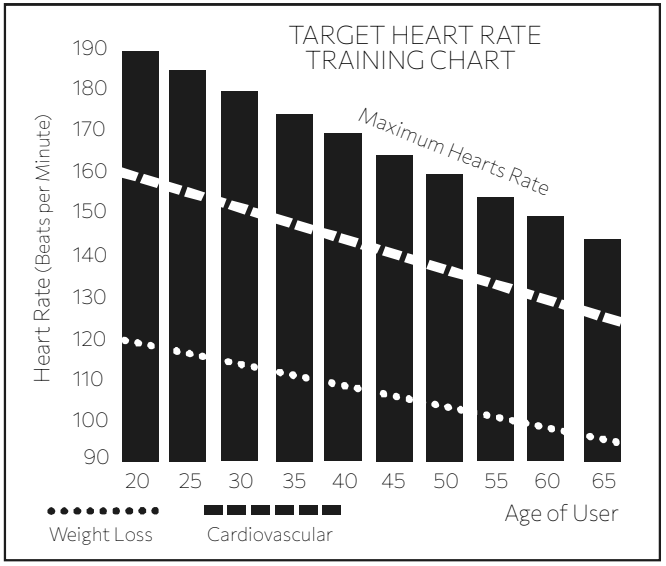

HEART RATE - PERCEIVED EXERTION

Heart rate is important but listening to your body also has a lot of advantages. There are more variables involved in how hard you should workout than just heart rate. Your stress level, physical health, emotional health, temperature, humidity, the time of day, the last time you ate and what you ate all contribute to the intensity at which you should workout. If you listen to your body it will tell you all of these things.

The rate of perceived exertion (RPE), also known as the Borg scale, was developed by Swedish physiologist G.A.V. Borg. This scale rates exercise intensity from 6 to 20 depending upon how you feel or the perception of your effort.
The scale is as follows:

You can get an approximate heart rate level for each rating by simply adding a zero to each rating. For example a rating of 12 will result in an approximate heart rate of 120 beats per minute. Your RPE will vary depending on the factors discussed earlier. If your body is strong and rested, you will feel strong and your pace will feel comfortable. When your body is in this condition, you are able to train harder and the RPE will support this. If you are feeling tired and sluggish, it is because your body needs a break. In this condition, your pace will feel difficult. Again, this will show up in your RPE and you will train at the proper level for that day.

Rating Perception of Effort	
6	Minimal
7	Very, Very Light
8	Very, Very Light +
9	Very Light
10	Very Light +
11	Fairly Light
12	Comfortable
13	Somewhat Hard
14	Somewhat Hard +
15	Hard
16	Hard +
17	Very Hard
18	Very Hard +
19	Very, Very Hard
20	Maximal

MAINTENANCE & CARE

Post-Workout Machine Care

1. Store your machine according to the folding instructions when not in use.
2. Use a slightly damp cloth to clean areas where sweat or oil made contact with the machine.
3. Use a microfiber cloth to clean the display and remove unwanted oils and other things that may damage the screen.
4. Avoid leaving paper or other small debris in the cupholders.

General Cleaning

Dirt, dust, and hair can block air inlets and accumulate on the running belt. Please vacuum underneath your unit on a monthly basis to prevent excess build-up of dirt that can get sucked up and get into the inner workings under the motor cover. Every other month, you should remove the motor cover and carefully vacuum out dirt and hair that may accumulate.

UNPLUG THE POWER CORD BEFORE THIS TASK.

Sanitizing Your XTERRA Fitness Equipment

- Unupholstered high-contact surfaces (hard plastics) can be sanitized using a 75% isopropyl alcohol solution and a clean, dry cloth. Spray surfaces to be sanitized, and use the dry cloth to wipe clean. Allow surfaces to dry before using.
- For upholstered or soft-plastic surfaces, use a conditioner after sanitizing. Be sure to follow the instructions provided by the conditioner manufacturer to ensure proper use of the conditioner.
- Alternatively, you can make your own spray by mixing the proper ratio of isopropyl alcohol and distilled water to reach a 75% solution.

MAINTENANCE & CARE - CONTINUED

Treadbelt Tracking Adjustment

The treadmill is designed so that the tread-belt remains reasonably centered while in use. It is normal for some belts to drift near one side while in use, depending on a user's gait and if they favor one leg. But if during use the belt continues to move toward one side, adjustments are necessary.

SETTING TREAD-BELT TRACKING

An 6mm Allen wrench is provided for this adjustment. Make tracking adjustments on the left side bolt. Set belt speed at 3 mph. Be aware that a small adjustment can make a dramatic difference which may not be apparent right away.

If the belt is too close to the left side, then turn the bolt only a 1/4 turn to the right (clockwise) and wait a few minutes for the belt to adjust itself. Continue to make 1/4 turns until the belt stabilizes in the center of the running deck.

If the belt is too close to the right side, turn the bolt counter-clockwise. The belt may require periodic tracking adjustment depending on use and walking/running characteristics. Some users may affect tracking differently. Expect to make adjustments as required to center the tread-belt. Adjustments will become less of a maintenance concern as the belt is used. Proper belt tracking is an owner responsibility common with all treadmills.

Damage to the running belt resulting from improper tracking / tension adjustments is not covered under the Spirit Fitness warranty.

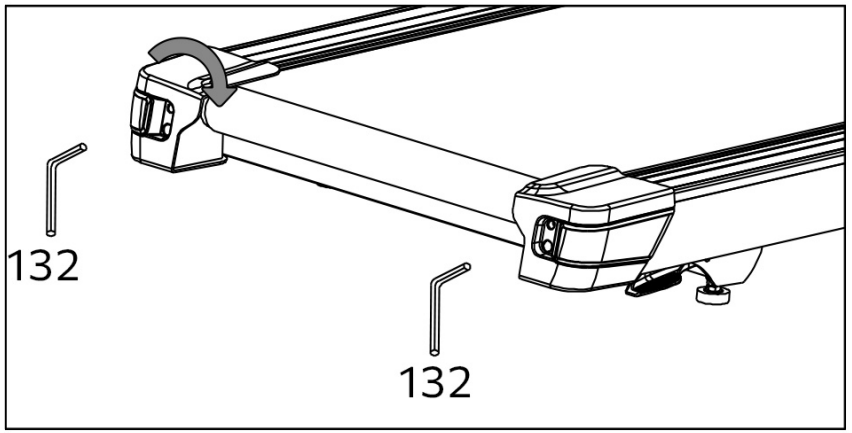

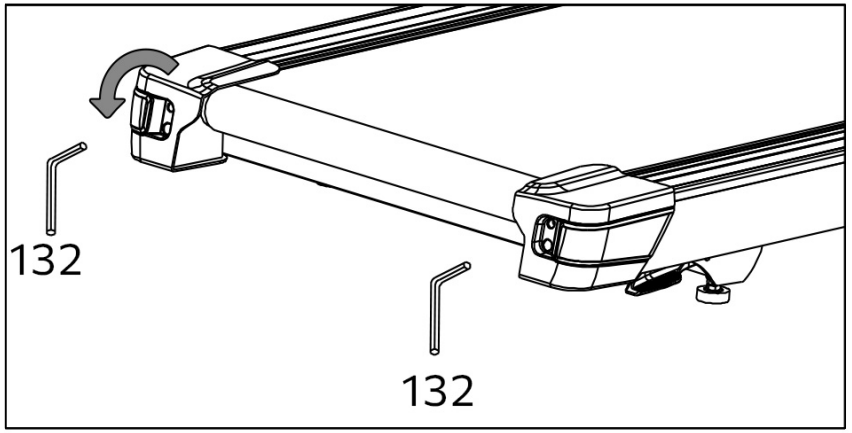

MAINTENANCE & CARE - CONTINUED

Belt Adjustments

Tread-belt Tension Adjustment - Belt tension is not critical for most users. It is very important though for joggers and runners in order to provide a smooth, steady running surface. Adjustment must be made from the rear roller with the 6mm Allen wrench provided in the parts package. The adjustment bolts are located at the end of the step rails as shown in the diagram below.

Tighten the rear roller only enough to prevent slippage at the front roller. Turn the tread-belt tension adjusting bolts 1/4 turn each and inspect for proper tension by walking on the belt and making sure it is not slipping or hesitating with each step. When an adjustment is made to the belt tension, you must be sure to turn the bolts on both sides evenly or the belt could start tracking to one side instead of running in the middle of the deck.

DO NOT OVERTIGHTEN – Over tightening will cause belt damage and premature bearing failure. If you tighten the belt a lot and it still slips, the problem could actually be the drive belt - located under the motor cover - that connects the motor to the front roller. If that belt is loose it feels similar to the walking belt being loose. Tightening the motor belt should be done by a trained service person.

DECK LUBRICATION

To ensure the longevity and proper function of your treadmill, proper belt maintenance is required. You should regularly check between the treadmill belt and the top of the treadmill base for proper lubrication, and to ensure that no dirt or debris has become trapped. Keeping the deck clean and lubricated at the recommended intervals ensures the longest life possible for your unit. Should lubrication dry out, or dirt become trapped, the friction between the belt and deck increases. Increased friction places undue stress on the drive motor, drive belt, and electronic motor control board which could result in catastrophic failure of these essential, expensive components.

Failure to clean and lubricate the deck at regular intervals may void the warranty.

As a part of your routine maintenance schedule, belt lubrication and cleaning should be performed every 90 days, after 90 hours of use, or earlier if you notice that the deck is dry or dirty. Please also be sure to check belt lubrication before first use.

Do not lubricate with anything other than XTERRA Fitness approved lubricant. Your treadmill comes with one tube of treadmill belt lubricant.

Extra tubes can be ordered directly from: www.Xterrafitness.com, or by calling our customer service department at (800)258-8511.

To lubricate your treadmill belt:

1. Turn the power switch off and unplug the power cord from the wall outlet.
2. Measure 18" from the edge of the motor cover; kneel down and reach under the belt approximately 4-6" from one edge. Squirt a line of lubricant about 1/8" wide x 15" long in an "S" pattern perpendicular to the motor cover.
3. Repeat the process on the opposite side.
4. Plug the electrical cord back into the outlet and turn the power switch on.
5. Walk on the belt at a moderate speed for five minutes to evenly distribute the silicone lube.

Regularly check belt lubrication by completing the following steps:

1. Ensure that your machine is off, and that the power cord is unplugged to minimize risk of injury.
2. Reach between the running belt and the top of the treadmill base to verify that lubrication is present.

BELT AND DECK CLEANING

Belt & Deck Cleaning

To clean your treadmill belt:

1. Ensure that your machine is off, and that the power cord is unplugged to minimize risk of injury.
2. Grab one edge of the treadmill belt, and lift slightly to expose the area between the top of the treadmill base and the running belt.
3. Do a visual check for any dirt or debris accumulation.
4. Should dirt and debris be present, slide a towel or cleaning cloth between the treadmill belt and top of the treadmill base until you can grasp one end on each side. (The cleaning cloth should be longer than the running belt is wide to achieve this.)
5. Using both hands, drag the cleaning cloth up and down the length of the treadmill base 1-2 times.
6. For excessive dirt accumulation, rotate the belt halfway, and repeat step 5. Continue until your cleaning cloth is no longer picking up any dirt.
7. Remove cleaning cloth from treadmill before plugging back in.

ENGINEERING MODE MENU

After removing the safety key, press **PROGRAM** and put on the safety key again to enter the engineering mode. The sequence of the setting is:

1. Wheel size (Default: 42)
2. Unit of speed (Default: metric 0, English 1)
3. Minimum speed (Default: 0.5MPH)
4. Maximum speed (Default: 10MPH)
5. Incline level (Default: 10)

Press SPEED Up / Down, INCLINE Up / Down to change the parameters. Press **ENTER** to set next parameter. After finishing setting parameters, press **START** to start calibrating and go to ready mode.

EXPLODED VIEW DIAGRAM

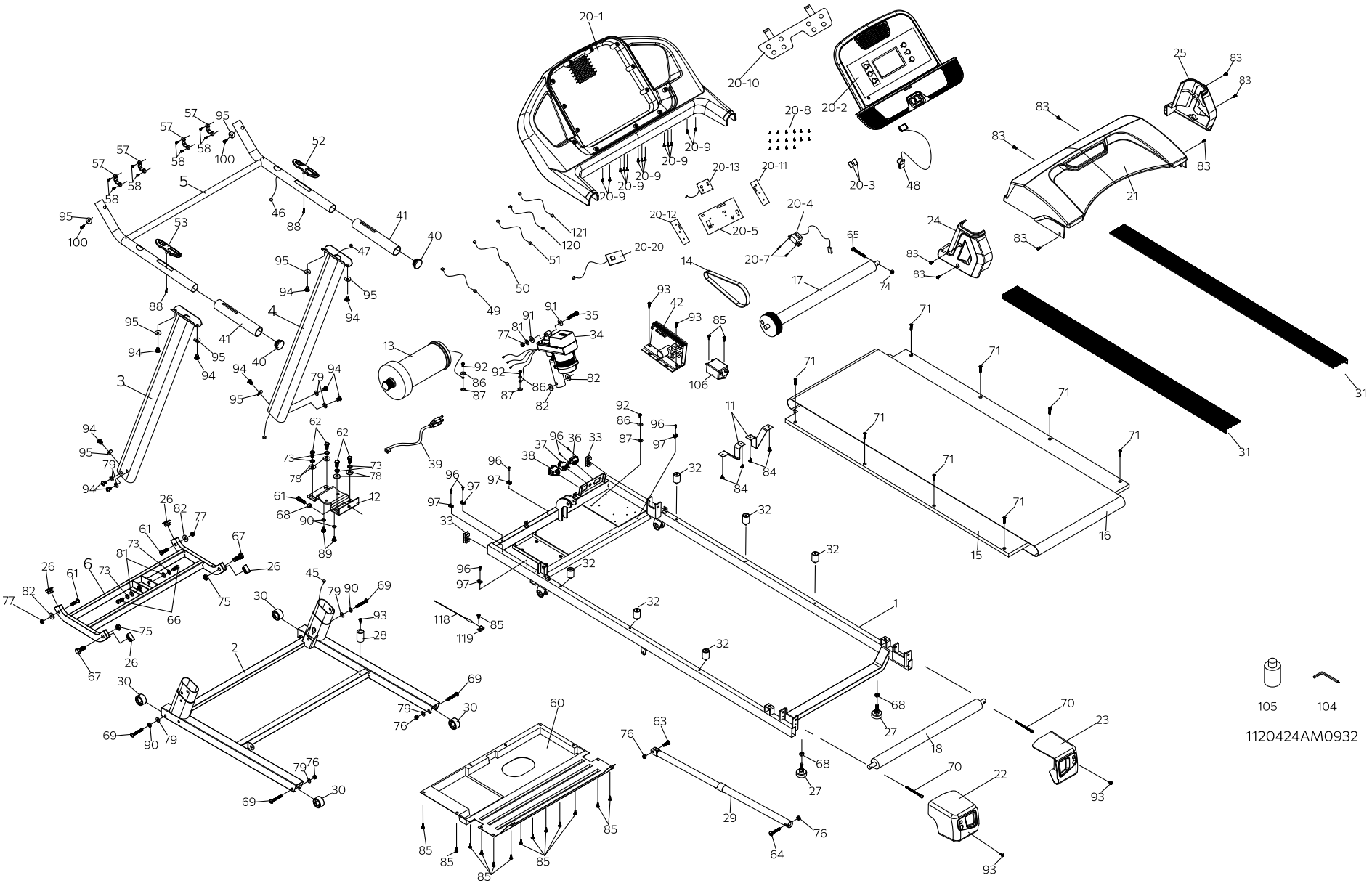

PARTS LIST

001	Main Frame	1
002	Frame Base	1
003	Left Upright	1
004	Right Upright	1
005	Console Support	1
006	Incline Bracket	1
011	Belt Guide	2
012	Motor Bracket	1
013	Motor	1
014	Drive Belt	1
015	Running Deck	1
016	Running Belt	1
017	Front Roller W/Pulley	1
018	Rear Roller	1
020	Console Assembly	1
020-01	Console Outer Cover	1
020-02	Console Inner Cover	1
020-03	Square Magnet Stop Plate	2
020-04	Safety Switch Module W/ Cable	1
020-05	Console Display Board	1
020-07	Ø3 × 10m/m_Sheet Metal Screw	2
020-08	Ø2.3 × 6m/m_Sheet Metal Screw	16
020-09	Ø3.5 × 12m/m_Sheet Metal Screw	13
020-10	Resistance Button W/Cable	1
020-11	Key Board-AK0127F	1
020-12	Key Board-AK0127G	1
020-13	Interface Board	1
020-20	Bluetooth	1
021	Motor Top Cover	1
022	Rear Adjustment Base (L)	1
023	Rear Adjustment Base (R)	1
024	Frame Base Cover (L)	1
025	Frame Base Cover (R)	1
026	15 × 30mm_Square End Cap	4
027	Adjustment Foot Pad	2
028	Rubber Foot Pad	1
029	Cylinder	1
030	Transportation Wheel	4
031	Foot Rail	2
032	Rubber Foot	6
033	20 × 40m/m_Square End Cap	2
034	Incline Motor	1
035	3/8" × 1-3/4"_Hex Head Bolt	1
036	Power Socket	1
037	Breaker	1
038	On/Off Switch	1
039	Power Cord	1
040	Button Head Plug	2
041	Handgrip Foam	2
042	Motor Controller	1
045	1000m/m_Computer Cable (Lower)	1
046	1000m/m_Computer Cable (Upper)	1

PARTS LIST

047	1150m/m_Computer Cable (Middle)	1
048	Square Safety Key	1
049	100m/m_Connecting Wire (Black)	1
050	250m/m_Connecting Wire (White)	1
051	250m/m_Connecting Wire (Black)	1
052	1200m/m_Speed/Hand Pulse Complex	1
053	1200m/m_Incline/Hand Pulse Complex	1
057	Console Bracket Anchor	4
058	3.5 × 20m/m_Sheet Metal Screw	8
060	Frame Cover	1
061	3/8" × 1-1/4"_Hex Head Bolt	3
062	3/8" × 3/4"_Hex Head Bolt	4
063	5/16" × 1"_Button Head Socket Bolt	1
064	5/16" × UNC18 × 1-3/4"_Button Head Socket Bolt	1
065	1/4" × UNC20 × 2-1/4"_Hex Head Bolt	1
066	3/8" × 22m/m_Socket Head Cap Bolt	2
067	1/2" × 1-1/4"_Hex Head Bolt	2
068	3/8" × 7T_Nut	3
069	5/16" × 2"_Button Head Socket Bolt	4
070	1/4" × 80m/m_Socket Head Cap Bolt	2
071	M6 × 20m/m_Flat Head Socket Screw	8
073	Ø10 × 2.0T_Split Washer	6
074	1/4" × 5T_Nyloc Nut	1
075	1/2" × 8T_Nyloc Nut	2
076	5/16" × 7T_Nyloc Nut	4
077	3/8" × 7T_Nyloc Nut	3
078	Ø3/8" × Ø25 × 2.0T_Flat Washer	4
079	Ø5/16" × Ø18 × 1.5T_Flat Washer	8
081	Ø3/8" × Ø19 × 1.5T_Flat Washer	3
082	Nylon Washer (A)	4
083	M5 × 15m/m_Phillips Head Screw	8
084	4 × 12m/m_Sheet Metal Screw	4
085	Ø5 × 16m/m_Tapping Screw	16
086	Ø5 × 1.5T_Split Washer	3
087	M5_Star Washer	3
088	3 × 25m/m_Sheet Metal Screw	2
089	M8 × 12m/m_Hex Head Bolt	2
090	Ø8 × 1.5T_Split Washer	4
091	Ø10 × Ø25 × 0.8T_Nylon Washer	2
092	M5 × 10m/m_Phillips Head Screw	3
093	5 × 19m/m_Tapping Screw	5
094	5/16" × 1/2"_Button Head Socket Bolt	10
095	Ø8 × 23 × 1.5T_Curved Washer	8
096	3.5 × 16m/m_Tapping Screw	7
097	Wire Tie Mount	5
100	5 × 16m/m_Tapping Screw	2
104	M5_Allen Wrench Head Screw Wrench	1
105	Lubricant	1
106	Filter	1
118	Sensor W/Cable	1
119	Sensor Rack	1
120	200m/m_Connecting Wire (White)	1
121	200m/m_Connecting Wire (Black)	1

WARRANTY - RESIDENTIAL

Effective March 08, 2023- **TRX1400 Treadmill LIMITED WARRANTY**

XTERRA Fitness Inc. warrants all its home use treadmill parts for a period of time listed below, from the date of retail sale, as determined by a sales receipt or in the absence of a sales receipt, eighteen (18) months from the original factory shipping date. XTERRA Fitness's responsibilities include providing new or remanufactured parts, at XTERRA Fitness's option, and technical support to our independent dealers and servicing organizations. In the absence of a dealer or service organization, these warranties will be administered by XTERRA Fitness directly to a consumer. The warranty period applies to the following components:

Home Use Limited Warranty

Warranty	Frame	Parts	Labor
Residential	Lifetime	90 Days	90 Days

RESPONSIBILITIES OF THE CONSUMER

This warranty applies only to products in ordinary household use, and the consumer/facility is responsible for the items listed below:

1. Proper use of the treadmill in accordance with the instructions provided in this manual
2. Proper installation in accordance with instructions provided with the treadmill and with all local electric codes.
3. Expenses for making the treadmill accessible for servicing, including any item that was not part of the treadmill at the time it was shipped from the factory.
4. Damages to the treadmill finish during shipping, installation or following installation.
5. Routine maintenance of this unit as specified in this manual.

WARRANTY - CONTINUED

What is not covered?

EXCLUSIONS

This warranty does not cover the following:

1. CONSEQUENTIAL, COLLATERAL, OR INCIDENTAL DAMAGES SUCH AS PROPERTY DAMAGE AND INCIDENTAL EXPENSES RESULTING FROM ANY BREACH OF THIS WRITTEN OR ANY IMPLIED WARRANTY.
   Note: Some states do not allow the exclusion or limitation of incidental or consequential damages, so this limitation or exclusion may not apply to you.
2. Service call reimbursement to the consumer. Service call reimbursement to the dealer that does not involve malfunction or defects in workmanship or material, for units that are beyond the warranty period, for units that are beyond the service call reimbursement period, for treadmill not requiring component replacement, or treadmill not in ordinary household or light commercial use.
3. Damages caused by services performed by persons other than authorized XTERRA Fitness service companies; use of parts other than original XTERRA Fitness parts; or external causes such as corrosion, discoloration of paint or plastic, alterations, modifications, abuse, misuse, accident, improper maintenance, inadequate power supply, or acts of God.
4. Products with original serial numbers that have been removed or altered.
5. Products that have been: sold, transferred, bartered, or given to a third party.
6. XTERRA Fitness reserves the right to request proof of purchase if no warranty record exists for the product.
7. THIS WARRANTY IS EXPRESSLY IN LIEU OF ALL OTHER WARRANTIES EXPRESSED OR IMPLIED, INCLUDING THE WARRANTIES OF MERCHANTABILITY AND/OR FITNESS FOR A PARTICULAR PURPOSE.
8. Product use in any environment other than a residential setting or non-dues paying facility with 5 hours use or less per day.
9. Warranties outside of the United States may vary. Please contact your local dealer for details.

Product features or specifications as described or illustrated are subject to change without notice. All warranties are made by XTERRA Fitness, Inc. This warranty applies only in the 48 contiguous United States. NOTE: This does not include Alaska or Hawaii.

WARRANTY - CONTINUED

Responsibilities of the Owner

SERVICE

Keep your bill of sale. Twelve (12) months from the date on the bill of sale or eighteen (18) months from the date of factory shipping as determined by the serial number establishes the labor warranty period should service be required. If service is performed, it is in your best interest to obtain and keep all receipts. This written warranty gives you specific legal rights. You may also have other rights that vary from state to state. Service under this warranty must be obtained by following these steps, in order:

1. Contact your selling authorized XTERRA Fitness dealer. OR
2. Contact your local authorized XTERRA Fitness service organization.
3. If there is a question as to where to obtain service, contact our service department at (870) 935-1107.
4. XTERRA Fitness' obligation under this warranty is limited to repairing or replacing, at XTERRA Fitness' option, the product through one of our authorized service centers. All repairs must be preauthorized by XTERRA Fitness. If the product is shipped to a service center freight charges to and from the service center will be the customer's responsibility. For replacement parts shipped while the product is under warranty, the customer will be responsible for shipping and handling charges. For in-home service, the customer will be responsible for a trip charge. There will be an additional trip charge if the customer is located over 100 miles from the nearest service center.
5. The owner is responsible for adequate packaging upon return to XTERRA Fitness. XTERRA Fitness is not responsible for damages in shipping. Make all freight damage claims with the appropriate freight carrier. DO NOT SHIP ANY UNIT TO OUR FACTORY WITHOUT A RETURN AUTHORIZATION NUMBER. All units arriving without a return authorization number will be refused.

For any further information, or to contact our service department by mail, send your correspondence to:

XTERRA Fitness, Inc.

P.O. Box 2037

Jonesboro, AR 72402-2037

Product features or specifications as described or illustrated are subject to change without notice. All warranties are made by XTERRA Fitness, Inc. This warranty applies only in the 48 contiguous United States. NOTE: This does not apply to Alaska or Hawaii.

TROUBLESHOOTING

Error Code Guide

ERROR NUMBER	Solution/ Cause
E0	Safety switch is open. Put on the safety key to eliminate the error.
E1	Speed signal is not received during calibration. Treadmill stops automatically after 10 seconds.
E2	E2 Overload error. Controller detected over rated current for 6 seconds.
E4	Abnormal motor voltage or motor disconnected.
E5	Communication disconnected
E6	Power transistor failure
ERR	Incline motor disconnected or damaged.

TROUBLESHOOTING - CONTINUED

Service Checklist Diagnosis Guide

Problem	Solution/ Cause
Display does not light	1. Tether cord not in position. 2. Circuit breaker on front grill tripped. Push circuit breaker in until it locks. 3. Plug is disconnected. Make sure plug is firmly pushed into AC wall outlet. 4. Breaker panel circuit breaker may be tripped. 5. Treadmill defect. Contact your dealer.
Tread-belt does not stay centered Treadmill belt hesitates when walked/ run on	The user may be walking while favoring or putting more weight on either the left or right foot. If this walking pattern is natural, track the belt slightly off-center to the side opposite from the belt movement. See the Maintenance & Care section on Tread-belt Tension. Adjust as necessary.
Motor is not responsive after pressing start	1. If you press Start and the belt never moves, contact service.
Treadmill will only achieve approximately 8 mph but shows higher on the display	This indicates motor should be receiving power to operate. Low AC voltage to treadmill. Do not use an extension cord. If an extension cord is required it should be as short as possible and heavy duty 16 gauge minimum. Low voltage. Contact an electrician or your dealer. A minimum of 120 volt AC current is required.
Tread-belt stops quickly/suddenly when tether cord is pulled	High belt/deck friction. See Maintenance & Care section on cleaning the deck. If cleaning doesn't prevent this from reoccurring, check to see if there is significant wear of the deck. If so, the deck may need to be flipped if it is on its original side
Treadmill trips on board 15 amp circuit	High belt/deck friction. See Maintenance & Care section. If cleaning doesn't prevent this from reoccurring, check the amp draw of the motor. If this is high and there are signs of significant wear of the deck, it may need to be flipped if it is on its original side
Computer shuts off when console is touched (on a cold day) while walking/running	Treadmill may not be grounded. Static electricity is "crashing" the computer. Refer to Grounding Instructions.
Circuit breaker trips, but not the treadmill circuit breaker	Check that the treadmill is the only appliance in the circuit. See "Electrical Safety" section for more details. Need to replace the house breaker with a "High In-rush current" type breaker

3000 Nestle Road Jonesboro, AR 72401 | Phone: 800-258-8511 | Fax: 870-935-7611

©2026 All Rights Reserved. TRX1400 Owner's Manual