XTERRA® FITNESS

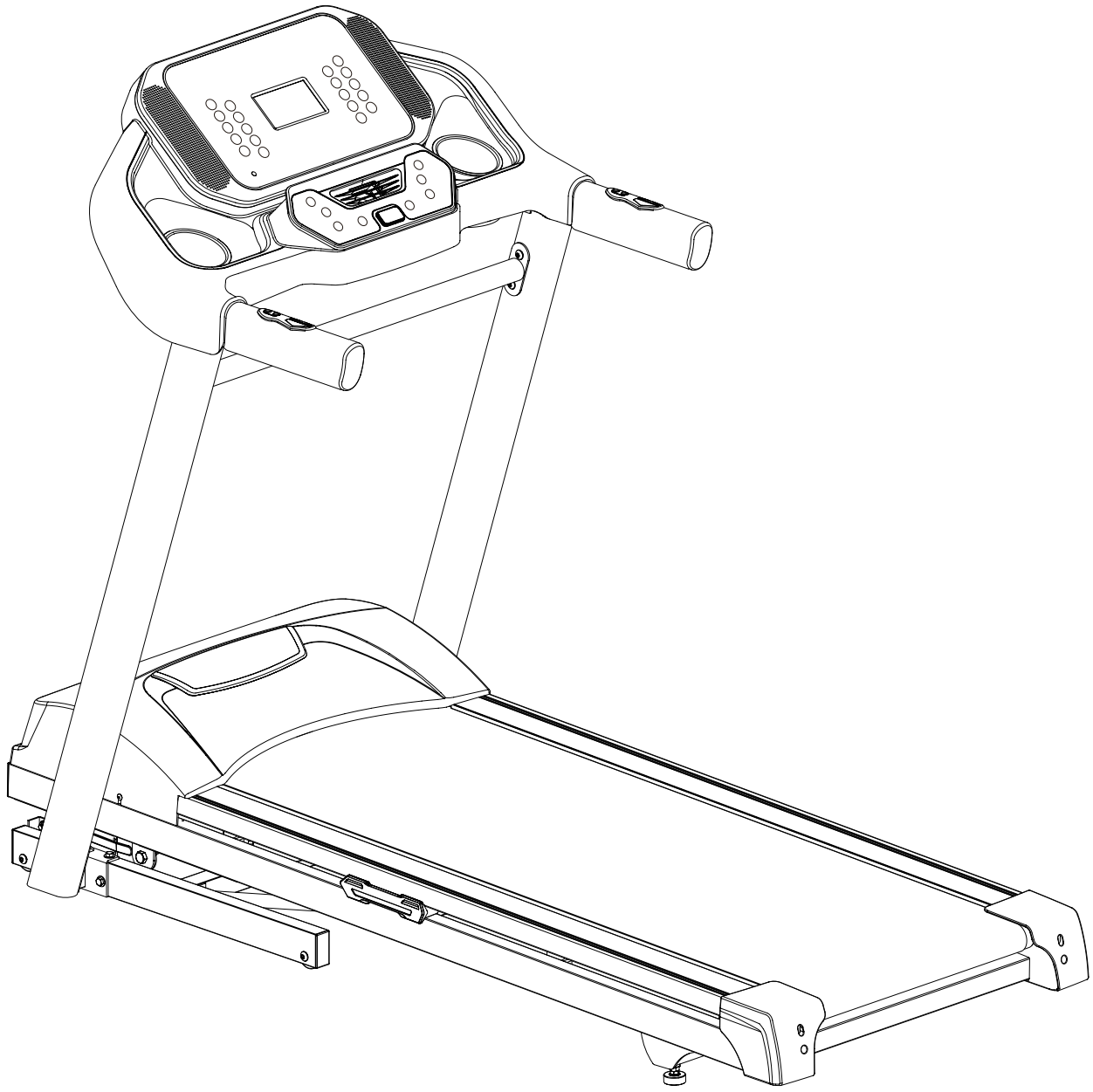

TRX2500 Treadmill
OWNER'S MANUAL

PLEASE CAREFULLY READ THIS ENTIRE MANUAL BEFORE OPERATING YOUR NEW TREADMILL

Table Of Contents

Product Registration	**1**
Important Safety Instructions	**2**
Important Operation Instructions	**3**
TRX2500 Assembly Instructions	**5**
Operation of Your Console	**10**
General Maintenance	**17**
Manufacturer’s Limited Warranty	**21**

ATTENTION

THIS TREADMILL IS INTENDED FOR RESIDENTIAL USE ONLY AND IS WARRANTED FOR THIS APPLICATION. ANY OTHER APPLICATION VOIDS THIS WARRANTY IN ITS ENTIRETY.

Congratulations On Your New Treadmill and Welcome to the XTERRA Fitness Family!

Thank you for your purchase of this quality Treadmill from **XTERRA Fitness**. Your new Treadmill has been manufactured by one of the leading fitness manufacturers in the world. **XTERRA Fitness** will do all we can to make your ownership experience as pleasant as possible for many years to come. If you have questions, or if parts are missing or damaged, or you require customer service, call (870)336-4286. Please have your model number and serial number handy when you call.

Please take a moment to record where you purchased your machine, as well as the date of purchase for future reference. We appreciate your confidence in **XTERRA Fitness** and we will always remember that you are the reason that we are in business. Please complete and mail your registration card today and enjoy your new Treadmill.

Yours in Health,
XTERRA Fitness

Purchase Location _____

Purchase Date _____

Product Registration

Record Your Serial Number
Please record the Serial Number of this fitness product in the space provided below.

Serial Number _____

Register Your Purchase
The self-addressed product registration card must be completed in full and returned to **XTERRA Fitness**. You can also go to ***www.xterrafitness.com/warranty*** to register online.

Important Safety Instructions

When using an electrical appliance, basic precautions should always be followed, including the following:
Read all instructions before using this appliance.

DANGER - To reduce the risk of electric shock:
Always unplug this appliance from the electrical outlet immediately after using and before cleaning.

WARNING - To reduce the risk of burns, fire electric shock, or injury to persons:

1. An appliance should never be left unattended when plugged in. Unplug from outlet when not in use, and before putting on or taking off parts.
2. Do not operate under blanket or pillow. Excessive heating can occur and cause fire, electric shock, or injury to persons.
3. This exercise equipment is not intended for use by persons with reduced physical, sensory or mental capabilities, or lack of experience and knowledge.
4. Use this appliance only for its intended use as described in this manual. Do not use attachments not recommended by the manufacturer.
5. Never operate this appliance if it has a damaged cord or plug, if it is not working properly, if it has been dropped or damaged, or dropped into water. Return the appliance to a service center for examination and repair.
6. Do not carry this appliance by supply cord or use cord as a handle.
7. Keep the cord away from heated surfaces.
8. Never operate the appliance with the air openings blocked. Keep the air openings free of lint, hair, and the like.
9. Never drop or insert any object into any opening.
10. Do not use outdoors.
11. Do not operate where aerosol (spray) products are being use or where oxygen is being administered.
12. Connect this appliance to a properly grounded outlet only. See Grounding Instructions.
13. The appliance is intended for household use.

SAVE THESE INSTRUCTIONS - THINK SAFETY!

WARNING: This product can expose you to chemicals including Toluene and Acrylamide which are known to the State of California to cause cancer and birth defects or other reproductive harm.
For more information go to www.P65Warnings.ca.gov

Fitness Equipment Safety Instructions

- To disconnect, turn all controls to the off position, then remove the plug from the outlet.
- Do not operate equipment on deeply padded, plush or shag carpet. Damage to both carpet and equipment may result.
- Before beginning this or any exercise program, consult a physician. This is especially important for persons over the age of 35 or persons with pre-existing health conditions.
- Keep hands away from all moving parts.
- The pulse sensors are not medical devices. Various factors, including the user's movement, may affect the accuracy of heart rate readings. The pulse sensors are intended only as exercise aids in determining heart rate trends in general.
- Do not attempt to use your equipment for any purpose other than for the purpose it is intended.
- Wear proper shoes. High heels, dress shoes, sandals or bare feet are not suitable for use on your equipment. Quality athletic shoes are recommended to avoid leg fatigue.
- User Weight Limit: 300 lbs.

Failure to follow all guidelines may compromise the effectiveness of the exercise experience, expose yourself (and possibly others) to injury, and reduce the longevity of the equipment.

SAVE THESE INSTRUCTIONS - THINK SAFETY!

Important Electrical Instructions

WARNING!
Route the power cord away from any moving part of the treadmill including the elevation mechanism and transport wheels.
NEVER remove any cover without first disconnecting AC power. If voltage varies by ten percent (10%) or more, the performance of your treadmill may be affected. **Such conditions are not covered under your warranty.** If you suspect the voltage is low, contact your local power company or a licensed electrician for proper testing.

NEVER expose this treadmill to rain or moisture. This product is **NOT** designed for use outdoors, near a pool or spa, or in any other high humidity environment. The temperature specification is 40 degrees C, and humidity is 95%, non-condensing (no water drops forming on surfaces).

Circuit breakers: Avoid AFCI/GFCI circuit breakers if possible. These breakers may trip occasionally during exercise because of the high inrush currents of the treadmill drive electronics and motor. This is an issue that affects all treadmill brands. New laws in your area may require these breakers. If you do have these breakers and outlets in your home, and are experiencing nuisance tripping, you should check if there are any other devices plugged into the same circuit. Some examples of devices that may also cause tripping are fluorescent lights with electronic ballasts, coffee maker, space heater, hair drier. Optimally the treadmill should be the only device plugged into the circuit. Our treadmills have surge suppressors built in to help avoid nuisance tripping. We have tested several AFCI/GFCI breakers and outlets with our products. Brands we have tested are: Eaton (Cutler Hammer Series), Leviton (Smart lock pro) and Schneider Electric (Canadian home series). These breakers do not trip in our testing, when connected to our treadmills, as long as no other devices are plugged into the same circuit.

Grounding Instructions

This product must be grounded. If the treadmill should malfunction or breakdown, grounding provides a path of least resistance for electric current, reducing the risk of electric shock. This product is equipped with a cord having an equipment-grounding plug. The plug must be plugged into an appropriate outlet that is properly installed and grounded in accordance with all local codes and ordinances.

DANGER - Improper connection of the equipment-grounding conductor can result in a risk of electric shock. Check with a qualified electrician or serviceman if you are in doubt as to whether the product is properly grounded. Do not modify the plug provided with the product if it will not fit the outlet; have a proper outlet installed by a qualified electrician.

This product is for use on a nominal 110-volt circuit, and has a grounding plug that looks like the plug illustrated below. A temporary adapter that looks like the adapter illustrated below may be used to connect this plug to a 2-pole receptacle as shown below if a properly grounded outlet is not available. The temporary adapter should be used only until a properly grounded outlet, (shown below) can be installed by a qualified electrician. The green colored rigid ear-lug, or the like, extending from the adapter, must be connected to a permanent ground such as a properly grounded outlet box cover. Whenever the adapter is used, it must be held in place by a metal screw.

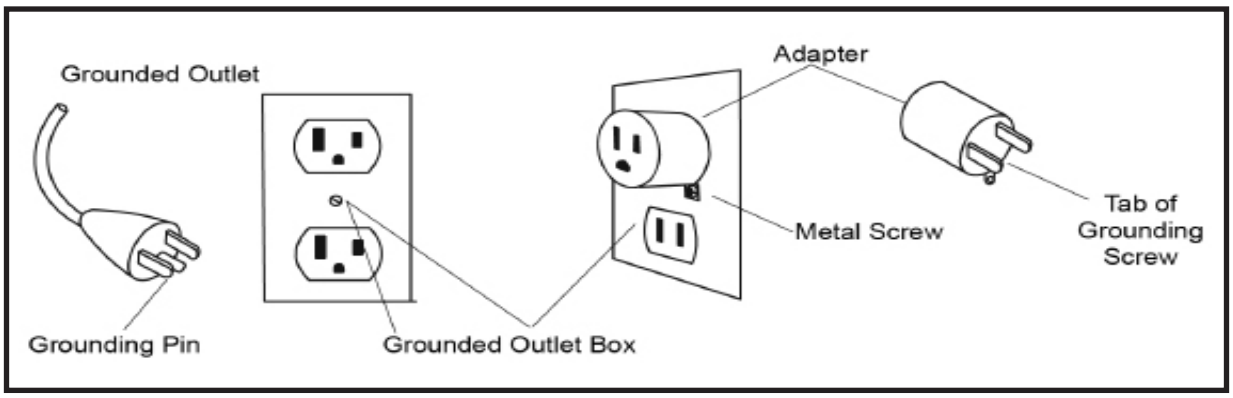

- **NEVER** operate this treadmill without reading and completely understanding the results of any operational change you request from the computer.
- Understand that changes in speed and incline do not occur immediately. Set your desired work level on the computer console and release the adjustment key. The computer will obey the command gradually.
- **NEVER** use your treadmill during an electrical storm. Surges may occur in your household power supply that could damage treadmill components. Unplug the treadmill during an electrical storm as a precaution.
- Use caution while participating in other activities while walking on your treadmill; such as watching television, reading, etc. These distractions may cause you to lose balance which may result in serious injury.
- Do not use excessive pressure on console control keys. They are precision set to function properly with little finger pressure.

SAFETY TETHER CORD

- A safety tether cord is provided with this unit. It is a simple magnetic design that should be used at all times. It is for your safety should you fall or move too far back on the tread-belt. Pulling this safety tether cord will stop tread-belt movement. To Use:

  1. Place the magnet into position on the round metal portion of the console control head. Your treadmill will not start and operate without this. Removing the magnet also secures the treadmill from unauthorized use.
  2. Fasten the plastic clip onto your clothing securely to assure good holding power. Note: The magnet has strong enough power to minimize accidental, unexpected stopping. The clip should be attached securely to make certain it does not come off. Be familiar with its function and limitations. The treadmill will stop, depending on speed, with a one to two step coast anytime the magnet is pulled off the console. Use the Stop / Pause switch in normal operation.

Failure to follow all guidelines may compromise the effectiveness of the exercise experience, expose yourself (and possibly others) to injury, and reduce the longevity of the equipment.

SAVE THESE INSTRUCTIONS - THINK SAFETY!

Pre-Assembly

Please read before unpacking your folding treadmill. Serious injury could occur if this folding treadmill is not unpacked properly.

There is a Velcro strap installed around the treadmill base that prevents the treadmill from unfolding accidentally during shipping. If this strap is not removed properly the treadmill could spring open unexpectedly and cause injury if someone is standing near the treadmill when the strap is removed.

To ensure your personal safety during removal of the shipping strap please make sure the treadmill is positioned flat on the ground, in the orientation it would be in if you were using the treadmill. Do not turn the treadmill up on its side while removing the shipping strap. This could cause the treadmill's folding mechanism to spring open. If the end of the Velcro strap (that you need to grab to remove it) happens to be under the treadmill deck, reach under the deck to grab it, but do not tilt the treadmill up to gain access to the strap end.

Cut the banding straps with a short box cutter (razor knife); separate the carton from the one underneath it by prying up on the staples (if applicable). Pull the carton over the treadmill parts and locate the hardware pack. The hardware pack is separated into five sections; one section containing tools and four sections labeled steps 1-4 which contain the hardware needed for assembly of each step. The assembly steps below are numbered one through four and correspond to the hardware in the numbered sections of the hardware pack. Remove only the hardware for the step you are currently assembling to avoid confusion and mix ups.

Pull the carton over the treadmill parts and lay it on a level surface.

TRX2500 Assembly Pack Checklist



 # 80. Ø8 × 1.5T_
Split Washer (4pcs)

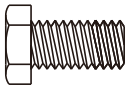

#99. 5/16" × 1/2"_
Hex Head Bolt (8pcs)

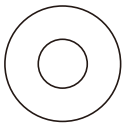

#100. Ø5/16" × Ø18 × 1.5T_
Flat Washer (8pcs)

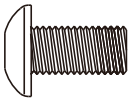

#125. 5/16" × 3/4"_
BoltHex Head Bolt (8pcs)

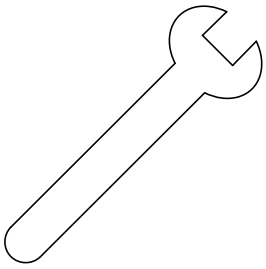

 # 90. 13L_Wrench (1pc)

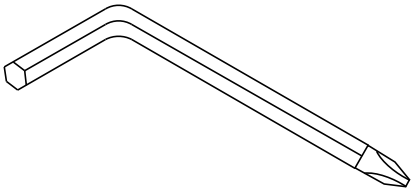

 # 102. Combination M5 Allen Wrench &
Phillips Head Screw Driver (1pc)

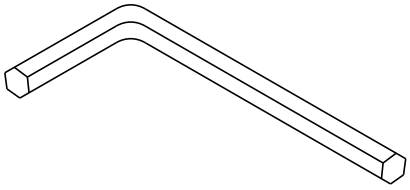

 # 103. M6_
L Allen Wrench (1pc)

TRX2500 Assembly Instructions

1 Remove Deck From Box

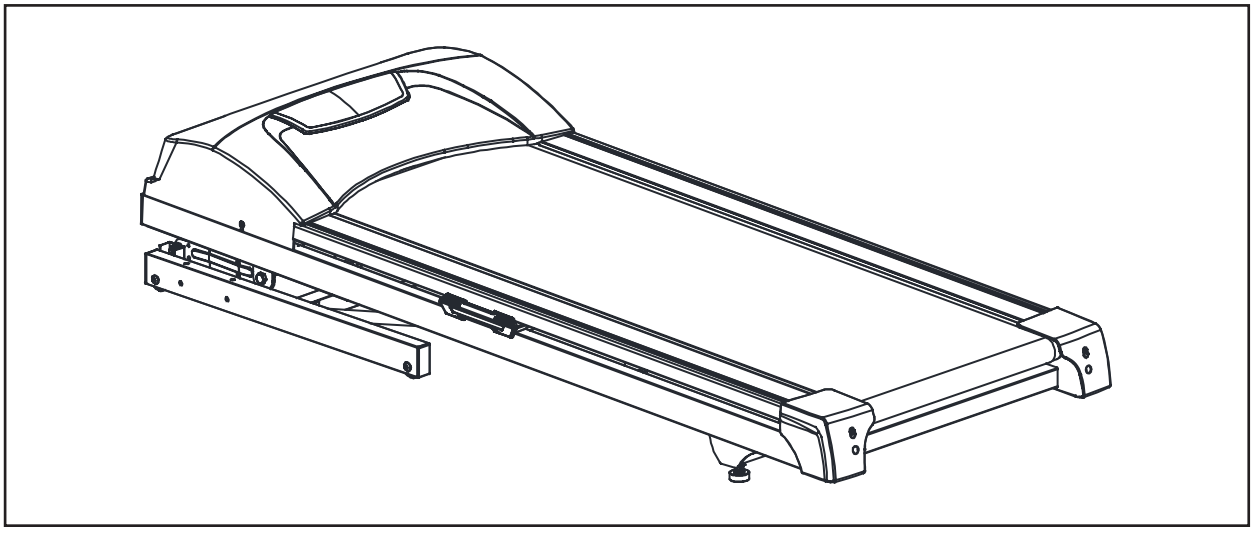

1. Take Treadmill Frame Base out of the carton and place it on level and clean ground.

2 Left and Right Uprights

Hardware Step 2

#90. 13mm Wrench
#99. 5/16”x1/2” Hex Head Bolts (8pcs)
#100. Ø 5/16” × Ø 18 × 1.5T Flat Washers (8pcs)

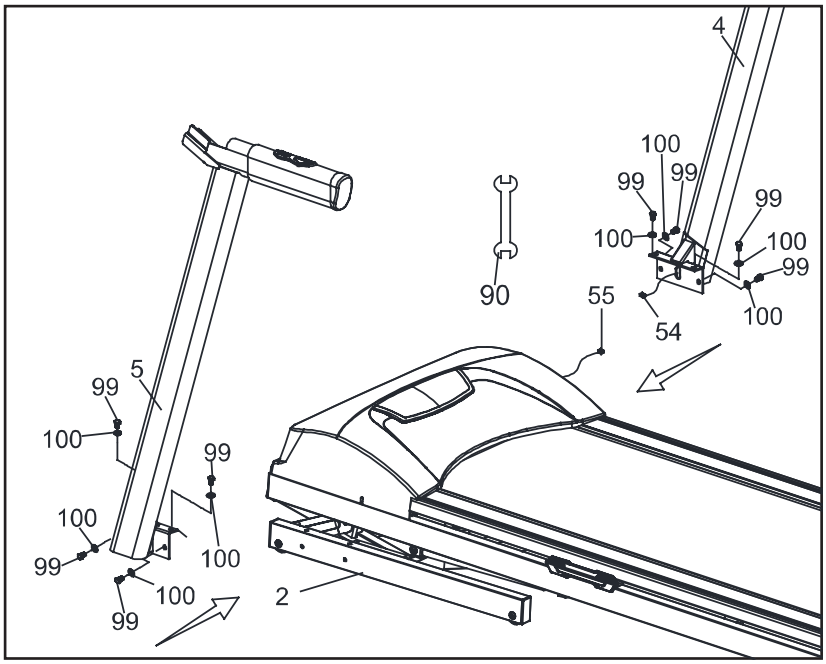

1. You may need assistance holding the Uprights for this step.
2. Connect the Computer Cable (Middle) **(54)** to the Computer Cable (Lower) **(55)** then insert Right and Left Uprights **(4)** and **(5)** into the Frame Base **(2)** and use the 13mm Wrench **(90)** to tighten 8 Hex Head Bolts **(99)** and 8 Flat Washers **(100)**. Be careful not to pinch the Computer Cables as this may cause damage to them.

TRX2500 Assembly Instructions

3 Console Attachment

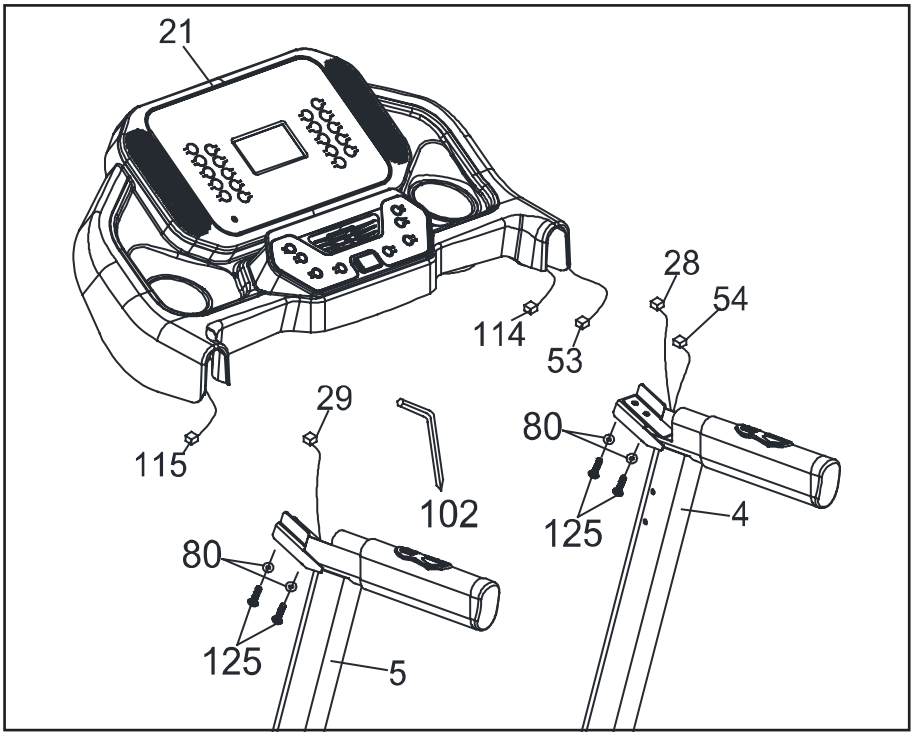

Hardware Step 3

#102. Combination M5 Allen Wrench & Phillips Head Screw Driver
#125. 5/16" × 3/4" Button Head Socket Bolts (4pcs)
#100. Ø 8 × 1.5T Split Washers (4pcs)

1. Connect the Computer Cable (Middle) **(54)** and Computer Cable (Upper) **(53)**.
2. Connect the Speed Adjustment Switch W/Cable (Upper) **(114)** and Speed/Hand Pulse Complex **(28)**.
3. Connect the Incline Adjustment Switch W/Cable (Upper) **(115)** and Incline/Hand Pulse Complex **(29)**.
4. Be careful not to pinch cables, as it may cause damage to them.
5. Insert the Console **(21)** onto the right and left Uprights **(4)** and **(5)** and secure with 4 Button Head Socket Bolts **(125)** with 4 Split Washers **(80)** by using Combination M5 Allen Wrench & Phillips Head Screw Driver **(102)**.

4 Crossbar Installation

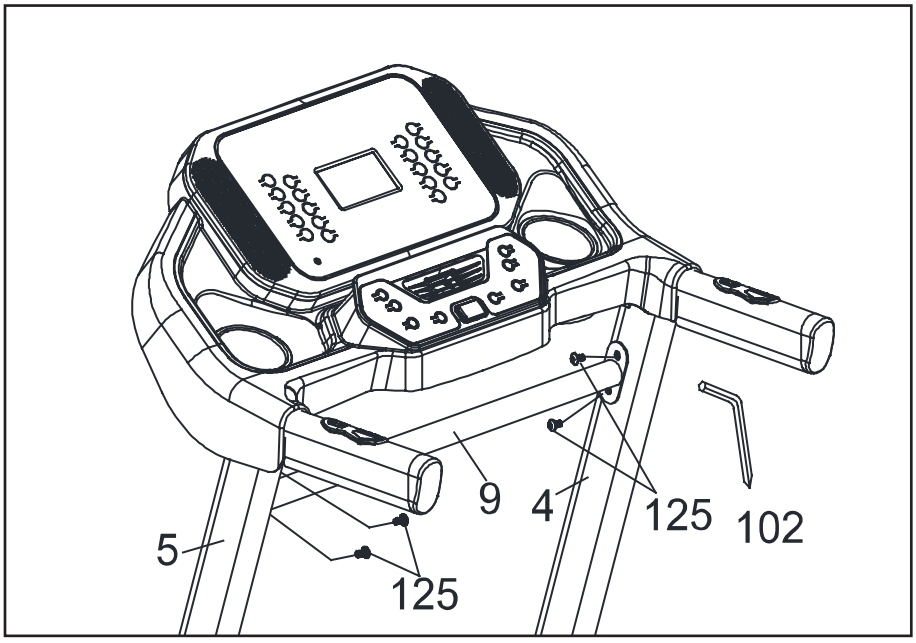

Hardware Step 4

#102. Combination M5 Allen Wrench & Phillips Head Screw Driver
#125. 5/16" × 3/4" Button Head Socket Bolts (4pcs)

1. Install Handrail Support **(9)** between left and right Uprights **(5)** and **(4)** and use Combination M5 Allen Wrench & Phillips Head Screw Driver **(102)** to tighten 4 Button Head Socket Bolts **(125)**.

NOTE:

2. Make sure to tighten all screws after all components have been assembled.

5 Finishing Assembly

Note: Once your treadmill is fully assembled, be sure to check the belt lubrication before initial use by completing the following steps:

1. Ensure that your machine is off, and that the power cord is unplugged to minimize risk of injury.
2. Use one hand to hold the treadmill belt up just enough so you can use your other hand reach between the belt and deck to verify that lubrication is present.

If lubrication is present, you may continual normal use. If lubrication is not present, please follow the steps on page 18 to lubricate your treadmill belt using approved treadmill belt lubricant.

Folding Instructions

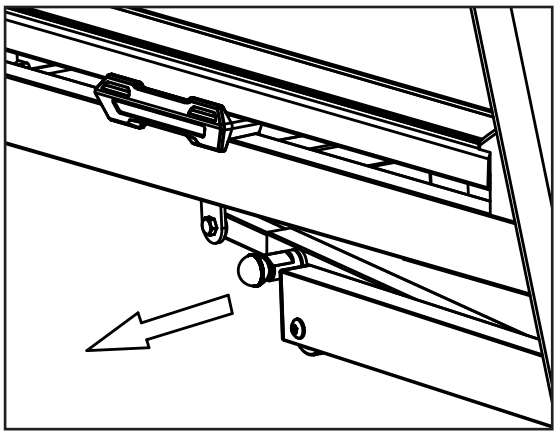

1. Pull Release Pin to lower deck from folded position until it locks.
2. Pull Release Pin and raise deck into locking position to fold.

Operation of Your Console

TRX2500 Console



Power Up

Power the treadmill on by plugging it into an appropriate wall outlet, then turn on the power switch located at the front of the treadmill below the motor hood. Ensure that the safety key is installed, as the treadmill will not operate without it.

The treadmill will then enter idle mode, which is the starting point for operation.

Quick Start Operation

1. Attach the Safety Key to enable the display (if not already on).
2. Press the Start/Stop key to begin belt movement. Adjust to the desired speed using the speed ▲ and ▼ keys (console or handgrip). You may also use the Speed Keys 1 - 10 to adjust the speed.
3. To adjust deck incline, press the ▲/▼ incline key (console or handgip) to the desired incline level. You may also press the Incline Keys 0 - 10 to adjust.
4. To stop the treadmill, press Start/Stop Key or pull out the Safety Key, though we encourage you to use the Start/Stop Key.

Functions

Pause / Stop / Reset

1. When the treadmill is running, the pause feature may be utilized by pressing the Start/Stop key once. This will slowly decelerate the tread-belt to a stop. The incline will go to zero percent. The Time, Distance and Calorie readings will also stop.
2. To resume your workout, press the Start/Stop key. The speed and incline will return to their previous settings.
3. If the ENTER key is held down while paused, the console will reset and return to the idle mode (start up) screen.

Incline Features

1. Incline may be adjusted anytime after the belt begins to move.
2. Press and hold the Adjust incline ▲/▼ keys on the left side (console or handgrip) to achieve your desired incline. You may also choose a more rapid increase / decrease by selecting a Incline Key 0 - 10 on left hand side of console (incline).
3. The display will indicate incline position as adjustments are made.

Pulse Grip Feature

The Pulse (Heart Rate) readout will display your current heart rate in beats per minute during the workout. You must use both stainless steel sensors on the handlebar to display your pulse. Pulse value displays anytime the upper display is receiving a pulse signal.

Calorie Display

Displays the cumulative calories burned at any given time during your workout.

Note: This is only a rough guide used for comparison of different exercise sessions, which cannot be used for medical purposes.

To Turn Treadmill Off

1. Remove Safety Key.
2. Turn of the main switch on the front of the treadmill, below the motor cover.

Note: Do not leave in Safety Key in treadmill when not in use. Always turn off machine.

Program Operation

Manual Program

In idle mode, you can directly start or press ENTER to set the countdown parameters (time, distance, calories). Press SPEED ▲ and ▼ in order to adjust the time, distance, calories, confirm and press ENTER key to switch time, distance, calories, the system only accept the last number of parameters.

For example, if the last input is a distance, the previous parameter will be invalid and only the distance setting will be accepted.

The default TIME preset is: 30: 00 (5: 00 ~ 99: 00), for each increase, the minimum value is 1:00. The default preset of DISTANCE is 5.00 miles (1.00 ~ 9.00), for each additional, the minimum value is 1.00. Default CALORIE value is 500 (10 ~ 9990), for each increase, the minimum is 10. The default SPEED is 0.5 miles.

Preset Programs

There are 24 groups of programs (P1 ~ P24), press the PROGRAM key to select P1 ~ P24, you can press the START button to start directly, or press the ENTER key to enter the set time parameter.
Time to defaults: 30: 00 (5: 00 ~ 99: 00), each increase or decrease the value of 1:00, set directly press the START button to start.

Preset Program Profiles

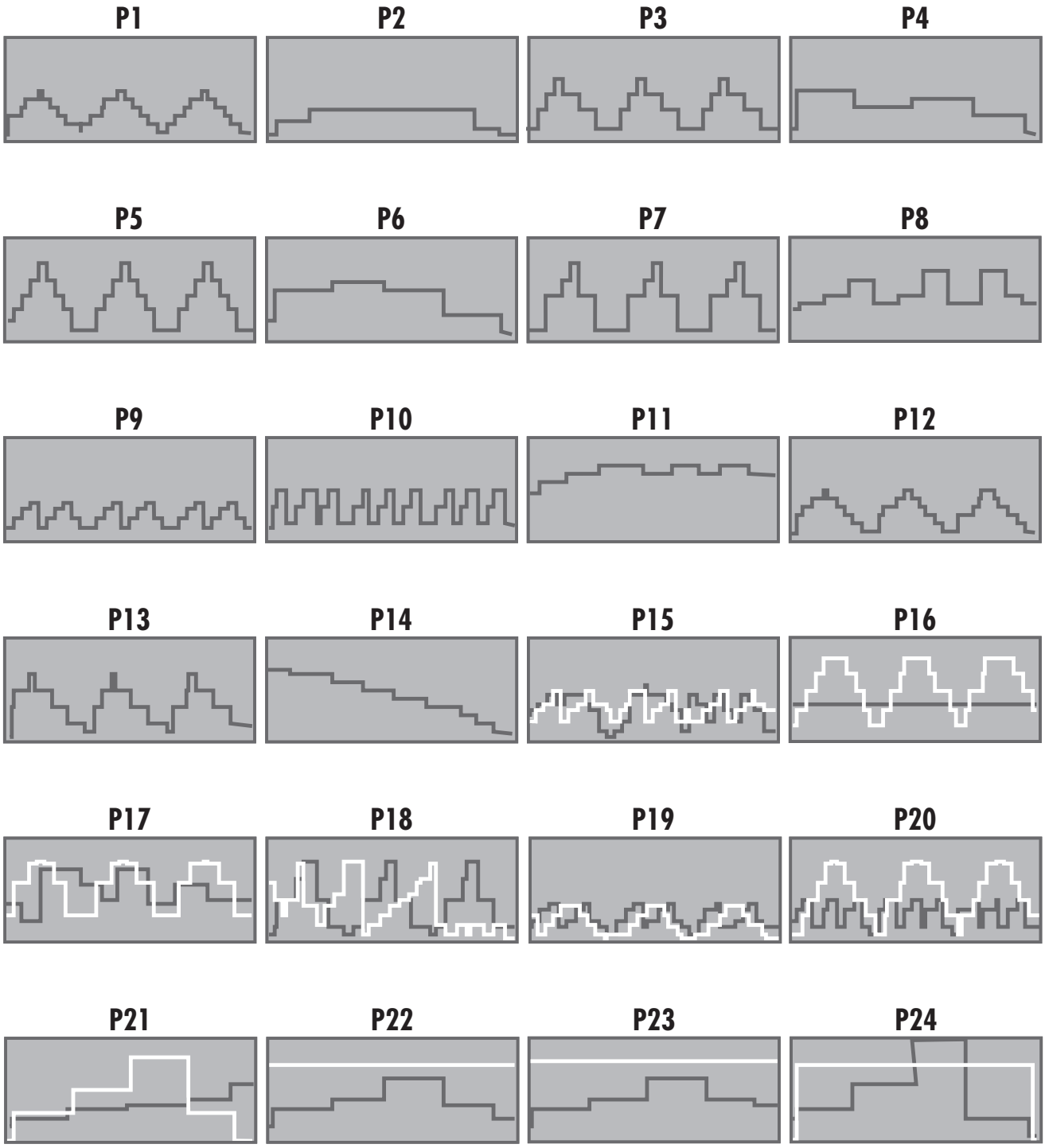

Key:
Speed
Incline

Preset Program Profiles

Program Profile Detail Chart

time / mode		1	2	3	4	5	6	7	8	9	10	11	12	13	14	15	16	17	18	19	20	21	22	23	24	25	26	27	28	29	30
P-1		1	1.5	2.5	3	3.5	3	2.5	1.5	1	1	1	1.5	2.5	3	3.5	3	2.5	1.5	1	1	1	1.5	2.5	3	3.5	3	2.5	1.5	1	1
P-2		1	1.5	1.5	1.5	1.5	2.5	2.5	2.5	2.5	2.5	2.5	2.5	2.5	2.5	2.5	2.5	2.5	2.5	2.5	2.5	2.5	2.5	2.5	2.5	2.5	1	1	1	1	1
P-3		1	2.5	3.5	5	3.5	3.5	2.5	2.5	1	1	1	2.5	3.5	5	3.5	3.5	2.5	2.5	1	1	1	2.5	3.5	5	3.5	3.5	2.5	2.5	1	1
P-4		1	3.5	3.5	3.5	3.5	3.5	3.5	3.5	2.5	2.5	2.5	2.5	2.5	2.5	2.5	3	3	3	3	3	3	3	1.5	1.5	1.5	1.5	1.5	1.5	1.5	1
P-5		1.5	2.5	3.5	5	6	5	3.5	2.5	1	1	1	2.5	3.5	5	6	5	3.5	2.5	1	1	1	2.5	3.5	5	6	5	3.5	2	1	1
P-6		1.5	3.5	3.5	3.5	3.5	3.5	3.5	3.5	4.5	4.5	4.5	4.5	4.5	4.5	4.5	3.5	3.5	3.5	3.5	3.5	3.5	3.5	1.5	1.5	1.5	1.5	1.5	1.5	1.5	1.5
P-7		2.5	1	3.5	3.5	5	6	3.5	3.5	1	1	1	1	3.5	3.5	5	6	3.5	3.5	1	1	1	1	3.5	3.5	5	6	3.5	3.5	1	1
P-8		2.5	3	3	3	3.5	3.5	3.5	5	5	5	3	3	3	3.5	3.5	3.5	5.5	5.5	5.5	3	3	3	3	5.5	5.5	5.5	3.5	3.5	3	3
P-9		3	1.5	2	3	1	1.5	2.5	3	1.5	1	1	1.5	2	3	1	1.5	2	3	1.5	1	1	1.5	2.5	3	1	1.5	2.5	3	1.5	1
P-10		3.5	2.5	3.5	1	2.5	3.5	1	2.5	3.5	1	1	2.5	3.5	1	2.5	3.5	1	2.5	3.5	1	1	2.5	3.5	1	2.5	3.5	1	2.5	3.5	1
P-11		3.5	3.5	4.5	4.5	4.5	5	5	5	5	5.5	5.5	5.5	5.5	5.5	5	5	5	5	5.5	5.5	5.5	5	5	5	5.5	5.5	5.5	5	5	5
P-12		4.5	1.5	2.5	3	3.5	3	2.5	1.5	1	1	1	1.5	2.5	3	3.5	3	2.5	1.5	1	1	1	1.5	2.5	3	3.5	3	2.5	1.5	1	1
P-13		5	2.5	3.5	5	2.5	3.5	2.5	2.5	1	1	1	2.5	3.5	5	3.5	3.5	2.5	2.5	1	1	1	2.5	3.5	5	3.5	3.5	2.5	2.5	1	1
P-14		5.5	5.5	5.5	5	5	5	5	5	4.5	4.5	4.5	4.5	3.5	3.5	3.5	3.5	3	3	3	3	2.5	2.5	2.5	2.5	1	1	1	1	1	1
P15	spd	1.5	2.5	3.5	2.5	3	3.5	3.5	3	2.5	1	1	1	1.5	3.5	4.5	3.5	3.5	3	2.5	1	3.5	3	1.5	3.5	2.5	1.5	3.5	2.5	2.5	1
	inc	3	4	5	6	3	4	5	6	5	4	3	4	5	6	3	4	5	6	3	4	3	4	5	6	3	4	5	6	5	4
P16	spd	3	3	3	3	3	3	3	3	3	3	3	3	3	3	3	3	3	3	3	3	3	3	3	3	3	3	3	3	3	3
	inc	2	4	6	8	10	10	10	8	6	4	2	4	6	8	10	10	10	8	6	4	2	4	6	8	10	10	10	8	6	4
P17	spd	3	3	1.5	1.5	1.5	5.5	5.5	5.5	5.5	4.5	4.5	4.5	3.5	3.5	5.5	5.5	5.5	5.5	3	3	3	4.5	4.5	4.5	4.5	3.5	3.5	3.5	3.5	3.5
	inc	3	7	7	9	10	9	7	7	3	3	3	7	7	9	10	9	7	7	3	3	3	7	7	9	10	9	7	7	3	3
P18	spd	1	1	3.5	3.5	5	6	3.5	3.5	1	1	1	1	3.5	3.5	5	6	3.5	3.5	1	1	1	1	3.5	3.5	5	6	3.5	3.5	1	1
	inc	7	5	3	5	9	4	2	4	6	8	10	10	1	2	3	4	5	6	7	8	9	2	1	2	1	2	1	1	2	0
P19	spd	1	1.5	2.5	3.5	1	1.5	2.5	3	1.5	1	1	1.5	2.5	3	1	1.5	2.5	3	1.5	1	1	1.5	2.5	3	1	1.5	2.5	3	1.5	1
	inc	3	1	2	3	4	4	3	2	1	0	1	1	2	3	4	4	3	2	1	0	1	1	2	3	4	4	3	2	1	0
P20	spd	1	2.5	3.5	1	2.5	3.5	1	2.5	3.5	1	1	2.5	3.5	1	2.5	3.5	1	2.5	3.5	1	1	2.5	3.5	1.5	2.5	3.5	1	2.5	3.5	1
	inc	1	3	5	7	9	10	9	7	5	3	1	3	5	7	9	10	9	7	5	3	1	3	5	7	9	10	9	7	5	3
P21	spd	1	1.5	1.5	1.5	1.5	1.5	1.5	1.5	2.5	2.5	2.5	2.5	2.5	2.5	2.5	3	3	3	3	3	3	3	3.5	3.5	3.5	3.5	3.5	3.5	4.5	4.5
	inc	0	3	3	3	3	3	3	3	6	6	6	6	6	6	6	10	10	10	10	10	10	10	3	3	3	3	3	3	0	0
P22	spd	1	2.5	2.5	2.5	2.5	2.5	2.5	2.5	3.5	3.5	3.5	3.5	3.5	3.5	3.5	5	5	5	5	5	5	5	3	3	3	3	3	3	1.5	1.5
	inc	9	9	9	9	9	9	9	9	9	9	9	9	9	9	9	9	9	9	9	9	9	9	9	9	9	9	9	9	9	9
P23	spd	1	2.5	2.5	2.5	2.5	2.5	2.5	2.5	3.5	3.5	3.5	3.5	3.5	3.5	3.5	5	5	5	5	5	5	5	3.5	3.5	3.5	3.5	3.5	3.5	3	3
	inc	10	10	10	10	10	10	10	10	10	10	10	10	10	10	10	10	10	10	10	10	10	10	10	10	10	10	10	10	10	10
P24	spd	1.5	2.5	2.5	2.5	2.5	2.5	2.5	2.5	4.5	4.5	4.5	4.5	4.5	4.5	4.5	7.5	7.5	7.5	7.5	7.5	7.5	7.5	1.5	1.5	1.5	1.5	1.5	1.5	1.5	1
	inc	0	9	9	9	9	9	9	9	9	9	9	9	9	9	9	9	9	9	9	9	9	9	9	9	9	9	9	9	9	0

HRC (Heart Rate Control)

This procedure for the heart rate control program, please consult your doctor or professional instructor before use.

Press PROGRAM to select H-1, press START to start the training, or press ENTER to enter the setting (time, heartbeat target), and use SPEED ▲/▼ and INCLINE ▲ /▼ to adjust.

1. Time: The default value is 30:00 (5: 00 ~ 99: 00). For each increment, the change is 1:00.
2. For the Heart Rate target value setting, the default value of 116 (60 ~ 220), for for each increment the change is 1.
   After the program starts, it must detect the heart rate to control the treadmill.

Heart Rate

The old motto, “no pain, no gain”, is a myth that has been overpowered by the benefits of exercising comfortably. A great deal of this success has been promoted by the use of heart rate monitors. With the proper use of a heart rate monitor, many people find that their usual choice of exercise intensity was either too high or too low and exercise is much more enjoyable by maintaining their heart rate in the desired benefit range.

To determine the benefit range in which you wish to train, you must first determine your predicted Maximum Heart Rate. This can be accomplished by using the following formula: 220 minus your age. This will give you the predicted Maximum Heart Rate (MHR) for someone of your age. To determine the effective heart rate range for specific goals you simply calculate a percentage of your MHR. Your heart rate training zone is 50% to 90% of your maximum heart rate. 60% of your MHR is the zone that burns fat, while 80% is for strengthening the cardio vascular system. This 60% to 80% is the zone to stay in for maximum benefit.

For someone who is 40 years old their predicted target heart rate zone is calculated:

220 – 40 = 180 (maximum heart rate)
180 x .6 = 108 beats per minute
(60% of maximum)
180 X .8 = 144 beats per minute
(80% of maximum)

So for a 40 year old the training zone would be 108 to 144 beats per minute.

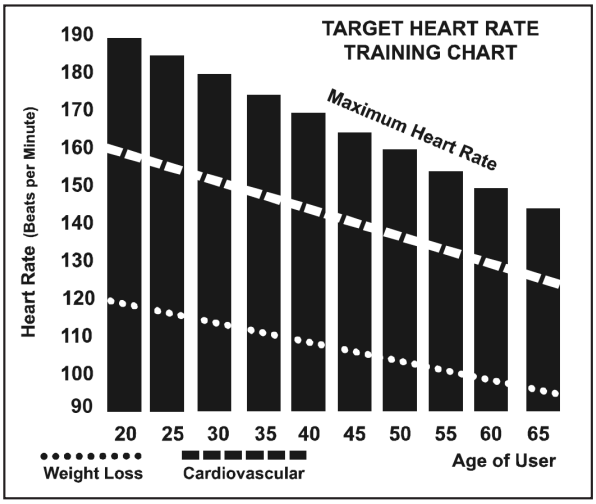

The two most popular reasons for, or goals, of exercise are cardiovascular fitness (training for the heart and lungs) and weight control. The black columns on the chart above represent the MHR for a person whose age is listed at the bottom of each column. The training heart rate, for either cardiovascular fitness or weight loss, is represented by two different lines that cut diagonally through the chart. A definition of the lines’ goal is in the bottom left-hand corner of the chart. If your goal is cardiovascular fitness or if it is weight loss, it can be achieved by training at 80% or 60%, respectively, of your MHR on a schedule approved by your physician. Consult your physician before participating in any exercise program.

Rate of Perceived Exertion

Heart rate is important but listening to your body also has a lot of advantages. There are more variables involved in how hard you should workout than just heart rate. Your stress level, physical health, emotional health, temperature, humidity, the time of day, the last time you ate and what you ate all contribute to the intensity at which you should
workout. If you listen to your body it will tell you all of these things.

The rate of perceived exertion (RPE), also known as the Borg scale, was developed by Swedish physiologist G.A.V. Borg. This scale rates exercise intensity from 6 to 20
depending upon how you feel or the perception of your effort.

The scale is as follows:

Rating Perception of Effort

6 Minimal
7 Very,very light
8 Very,very light +
9 Very light
10 Very light +
11 Fairly light
12 Comfortable
13 Somewhat hard
14 Somewhat hard +
15 Hard
16 Hard +
17 Very hard
18 Very hard +
19 Very,very hard
20 Maximal

You can get an approximate heart rate level for each rating by simply adding a zero to each rating. For example a rating of 12 will result in an approximate heart rate of 120 beats per minute. Your RPE will vary depending on the factors discussed earlier. If your body is strong and rested, you will feel strong and your pace will feel comfortable. When your body is in this condition, you are able to train harder and the RPE will support this. If you are feeling tired and sluggish, it is because your body needs a break. In this
condition, your pace will feel difficult. Again, this will show up in your RPE and you
will train at the proper level for that day.

Treadbelt Tracking Adjustment

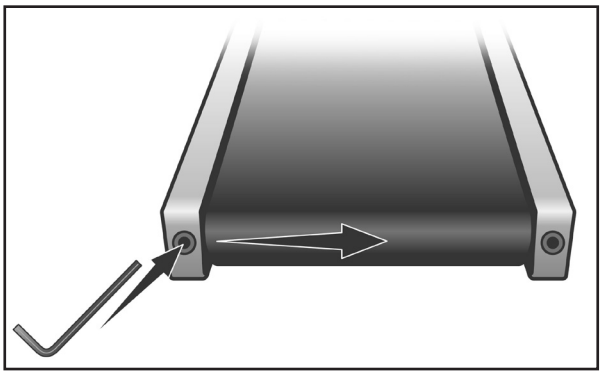

The treadmill is designed so that the tread-belt remains reasonably centered while in use. It is normal for some belts to drift near one side while in use, depending on a user's gait and if they favor one leg. But if during use the belt continues to move toward one side, adjustments are necessary.

SETTING TREAD-BELT TRACKING
An 6mm Allen wrench is provided for this adjustment. Make tracking adjustments on the left side bolt. Set belt speed at 3 mph. Be aware that a small adjustment can make a dramatic difference which may not be apparent right away. If the belt is too close to the left side, then turn the bolt only a 1/4 turn to the right (clockwise) and wait a few minutes for the belt to adjust itself. Continue to make 1/4 turns until the belt stabilizes in the center of the running deck.

If the belt is too close to the right side, turn the bolt counter-clockwise. The belt may require periodic tracking adjustment depending on use and walking/running characteristics. Some users may affect tracking differently. Expect to make adjustments as required to center the tread-belt. Adjustments will become less of a maintenance concern as the belt is used. Proper belt tracking is an owner responsibility common with all treadmills.

ATTENTION
Damage to the running belt resulting from improper tracking / tension adjustments is not covered under the XTERRA Fitness warranty.

General Cleaning

Dirt, dust, and hair can block air inlets and accumulate on the running belt. Please vacuum underneath your treadmill on a monthly basis to prevent excess build-up of dirt that can get sucked up and get into the inner workings under the motor cover. Every other month, you should remove the motor cover and carefully vacuum out dirt and hair that may accumulate.
UNPLUG THE POWER CORD BEFORE THIS TASK.

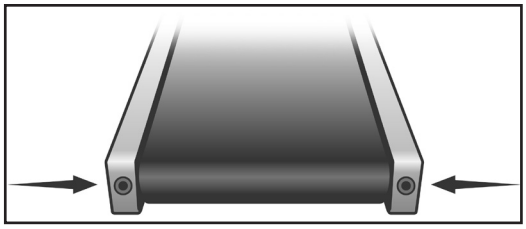

Belt Adjustments

Tread-belt Tension Adjustment - Belt tension is not critical for most users. It is very important though for joggers and runners in order to provide a smooth, steady running surface. Adjustment must be made from the rear roller with the 6mm Allen wrench provided in the parts package. The adjustment bolts are located at the end of the step rails as shown in the diagram below.

Tighten the rear roller only enough to prevent slippage at the front roller. Turn the tread-belt tension adjusting bolts 1/4 turn each and inspect for proper tension by walking on the belt and making sure it is not slipping or hesitating with each step. When an adjustment is made to the belt tension, you must be sure to turn the bolts on both sides evenly or the belt could start tracking to one side instead of running in the middle of the deck.

DO NOT OVERTIGHTEN – Over tightening will cause belt damage and premature bearing failure. If you tighten the belt a lot and it still slips, the problem could actually be the drive belt - located under the motor cover - that connects the motor to the front roller. If that belt is loose it feels similar to the walking belt being loose. Tightening the motor belt should be done by a trained service person.

Belt/Deck Lubrication Procedure

To ensure the longevity and proper function of your treadmill, proper belt maintenance is required. You should regularly check between the treadmill belt and the top of the treadmill base for proper lubrication, and to ensure that no dirt or debris has become trapped. Keeping the deck clean and lubricated at the recommended intervals ensures the longest life possible for your treadmill. Should lubrication dry out, or dirt become trapped, the friction between the belt and deck increases. Increased friction places undue stress on the drive motor, drive belt, and electronic motor control board which could result in catastrophic failure of these essential, expensive components.

Failure to clean and lubricate the deck at regular intervals may void the warranty.

As a part of your routine maintenance schedule, belt lubrication and cleaning should be performed every 80 hours of use, or earlier if you notice that the deck is dry or dirty. Please also be sure to check belt lubrication before first use. Do not lubricate with anything other than XTERRA Fitness approved lubricant. Your treadmill comes with one tube of treadmill belt lubricant. Extra tubes can be ordered directly from: www.xterrafitness.com, or by calling our customer service department at (870)336-4286.

Regularly check belt lubrication by completing the following steps:

1. Ensure that your machine is off, and that the power cord is unplugged to minimize risk of injury.
2. Reach between the running belt and the top of the treadmill base to verify that lubrication is present.

To lubricate your treadmill belt:

1. Ensure that your machine is off, and unplugged to minimize risk of injury.
2. Reach between the belt and the top of the treadmill base to verify that lubrication is present.
3. While kneeling beside your treadmill deck, use one hand to hold the treadmill belt up and away from the treadmill base just enough so you can use your other hand to reach the lubrication underneath.
4. Starting about 1 foot from the motor cover, begin applying ½ of your lubricant bottle in a long “S” pattern about 4-6” from one edge.
5. Repeat steps 3 and 4 on the opposite side using the remaining ½ of the lubricant bottle.
6. Plug the treadmill power cord back in, and turn the power switch back on.
7. Walk on the belt at a moderate speed for 5 minutes to evenly distribute the lubricant along the treadmill belt and deck.
8. Your treadmill belt is now lubricated. Normal use can resume.

Note: If your console display is showing a “LUBE” message, perform the following procedure to reset the display:

1. In standby mode, hold the ENTER key for 3 seconds to reset the message.

To clean your treadmill belt:

1. Ensure that your machine is off, and that the power cord is unplugged to minimize risk of injury.
2. Grab one edge of the treadmill belt, and lift slightly to expose the area between the top of the treadmill base and the running belt.
3. Do a visual check for any dirt or debris accumulation.
4. Should dirt and debris be present, slide a towel or cleaning cloth between the treadmill belt and top of the treadmill base until you can grasp one end on each side. (The cleaning cloth should be longer than the running belt is wide to achieve this.)
5. Using both hands, drag the cleaning cloth up and down the length of the treadmill base 1-2 times.
6. For excessive dirt accumulation, rotate the belt halfway, and repeat step 5. Continue until your cleaning cloth is no longer picking up any dirt.
7. Remove cleaning cloth from treadmill before plugging back in.

Error Messages

E0 Safety Key is not in place. A reminder to put in the safety key.
E1 Treadmill calibration did not receive a speed signal for 10 seconds.
E2 Over the rated current. The controller is over the rated current for 3 seconds.
Er Incline Error.
E4 Motor voltage surge or motor is disconnected.
E5 Communication is disconnected.
E6 Power malfunction.

Calibration Mode

First remove the Safety key, hold down the Program key and at the same time replace the safety key. The treadmill’s console will enter Calibration mode. **DO NOT STAND ON THE BELT DURING CALIBRATION**

1. Set wheel diameter to 60. Press the Enter key to confirm and move to the next item.
2. Set kilometers or miles. Press the Enter key to confirm and move to the next item.
3. Set the minimum speed of 0.5. Press the Enter key to confirm and move to the next item.
4. Set the maximum speed of 10. Press the Enter key to confirm and move to the next item.
5. Set the maximum incline value of 10, then press the Enter key to confirm. It will automatically enter into the calibration display.
6. Press the START/STOP key to start the calibration. It will return to the standby screen automatically after the calibration is complete.

Engineering Mode

Before entering the Engineering Mode, please turn the power off. Then hold down the Enter key, plus the Speed Up and Down keys. Then power on while holding all three keys. The treadmill's console will enter Engineering mode.

In Engineering Mode you can press Speed Up or Down to cycle through menu of options.

1. Sleep Mode - This setting allows your machine to enter "Sleep Mode" and power down after 5 minutes of non-use. By default this is set to ON. You can toggle this mode ON & OFF by pressing the speed Up and/or Down keys. You can then press Enter to set the mode exit.

User Notes:

Manufacturer's Limited Warranty

Effective June 07, 2024- Treadmill LIMITED WARRANTY

XTERRA Fitness Inc. warrants all its home use treadmill parts for a period of time listed below, from the date of retail sale, as determined by a sales receipt or in the absence of a sales receipt, eighteen (18) months from the original factory shipping date. XTERRA Fitness's responsibilities include providing new or remanufactured parts, at XTERRA Fitness's option, and technical support to our independent dealers and servicing organizations. In the absence of a dealer or service organization, these warranties will be administered by XTERRA Fitness directly to a consumer. The warranty period applies to the following components:

Home Use Limited Warranty

Warranty	Frame	Motor	Deck	Parts	Labor
Residential	Lifetime	Lifetime	1 Year	1 Year	1 Year

NORMAL RESPONSIBILITIES OF THE CONSUMER

This warranty applies only to products in ordinary household use, and the consumer is responsible for the items listed below:

1. The warranty registration card must be completed and returned to the address listed on the card within 10 days of the original purchase to validate the manufacturer's limited warranty.
2. Proper use of the treadmill in accordance with the instructions provided in this manual
3. Proper installation in accordance with instructions provided with the treadmill and with all local electric codes.
4. Proper connection to a grounded power supply of sufficient voltage, replacement of blown fuses, repair of loose connections or defects in house wiring.
5. Expenses for making the treadmill accessible for servicing, including any item that was not part of the treadmill at the time it was shipped from the factory.
6. Damages to the treadmill finish during shipping, installation or following installation.
7. Routine maintenance of this unit as specified in this manual.

EXCLUSIONS

This warranty does not cover the following:

1. CONSEQUENTIAL, COLLATERAL, OR INCIDENTAL DAMAGES SUCH AS PROPERTY DAMAGE AND INCIDENTAL EXPENSES RESULTING FROM ANY BREACH OF THIS WRITTEN OR ANY IMPLIED WARRANTY.
   Note: Some states do not allow the exclusion or limitation of incidental or consequential damages, so this limitation or exclusion may not apply to you.
2. Service call reimbursement to the consumer. Service call reimbursement to the dealer that does not involve malfunction or defects in workmanship or material, for units that are beyond the warranty period, for units that are beyond the service call reimbursement period, for treadmill not requiring component replacement, or treadmill not in ordinary household use.
3. Damages caused by services performed by persons other than authorized XTERRA Fitness service companies; use of parts other than original XTERRA Fitness parts; or external causes such as corrosion, discoloration of paint or plastic, alterations, modifications, abuse, misuse, accident, improper maintenance, inadequate power supply, or acts of God.
4. Products with original serial numbers that have been removed or altered.
5. Products that have been: sold, transferred, bartered, or given to a third party.
6. Products that are used as floor models.
7. Products that do not have a warranty registration card on file at XTERRA Fitness. XTERRA Fitness reserves the right to request proof of
   purchase if no warranty record exists for the product.
8. THIS WARRANTY IS EXPRESSLY IN LIEU OF ALL OTHER WARRANTIES EXPRESSED OR IMPLIED, INCLUDING THE WARRANTIES OF MERCHANTABILITY AND/OR FITNESS FOR A PARTICULAR PURPOSE.
9. Product use in any environment other than a residential setting.

SERVICE

Keep your bill of sale. Twelve (12) months from the date on the bill of sale or eighteen (18) months from the date of factory shipping as determined by the serial number establishes the labor warranty period should service be required. If service is performed, it is in your best interest to obtain and keep all receipts. This written warranty gives you specific legal rights. You may also have other rights that vary from state to state. Service under this warranty must be obtained by following these steps, in order:

1. Contact your selling authorized XTERRA Fitness dealer. OR
2. Contact your local authorized XTERRA Fitness service organization.
3. If there is a question as to where to obtain service, contact our service department at (870) 336-4286.
4. XTERRA Fitness' obligation under this warranty is limited to repairing or replacing, at XTERRA Fitness' option, the product through one of our authorized service centers. All repairs must be preauthorized by XTERRA Fitness. If the product is shipped to a service center freight charges to and from the service
   center will be the customer's responsibility. For replacement parts shipped while the product is under warranty, the customer will be responsible for shipping and handling charges. For in-home service, the customer will be responsible for a trip charge. There will be an additional trip charge if the customer is located over 100 miles from the nearest service center.
5. The owner is responsible for adequate packaging upon return to XTERRA Fitness. XTERRA Fitness is not responsible for damages in shipping. Make all freight damage claims with the appropriate freight carrier. DO NOT SHIP ANY UNIT TO OUR FACTORY WITHOUT A RETURN AUTHORIZATION NUMBER. All units arriving without a return authorization number will be refused.
6. For any further information, or to contact our service department by mail, send your correspondence to:

   XTERRA Fitness, Inc.
   P.O. Box 2037
   Jonesboro, AR 72402-2037

Product features or specifications as described or illustrated are subject to change without notice. All warranties are made by XTERRA Fitness, Inc. This warranty applies only in the 48 contiguous United States. NOTE: This does not include Alaska or Hawaii.

3000 Nestle Road Jonesboro, AR 72401 - Phone:870-336-4286 - Fax:870-935-7611

©2024 All Rights Reserved.