XTERRA® FITNESS™

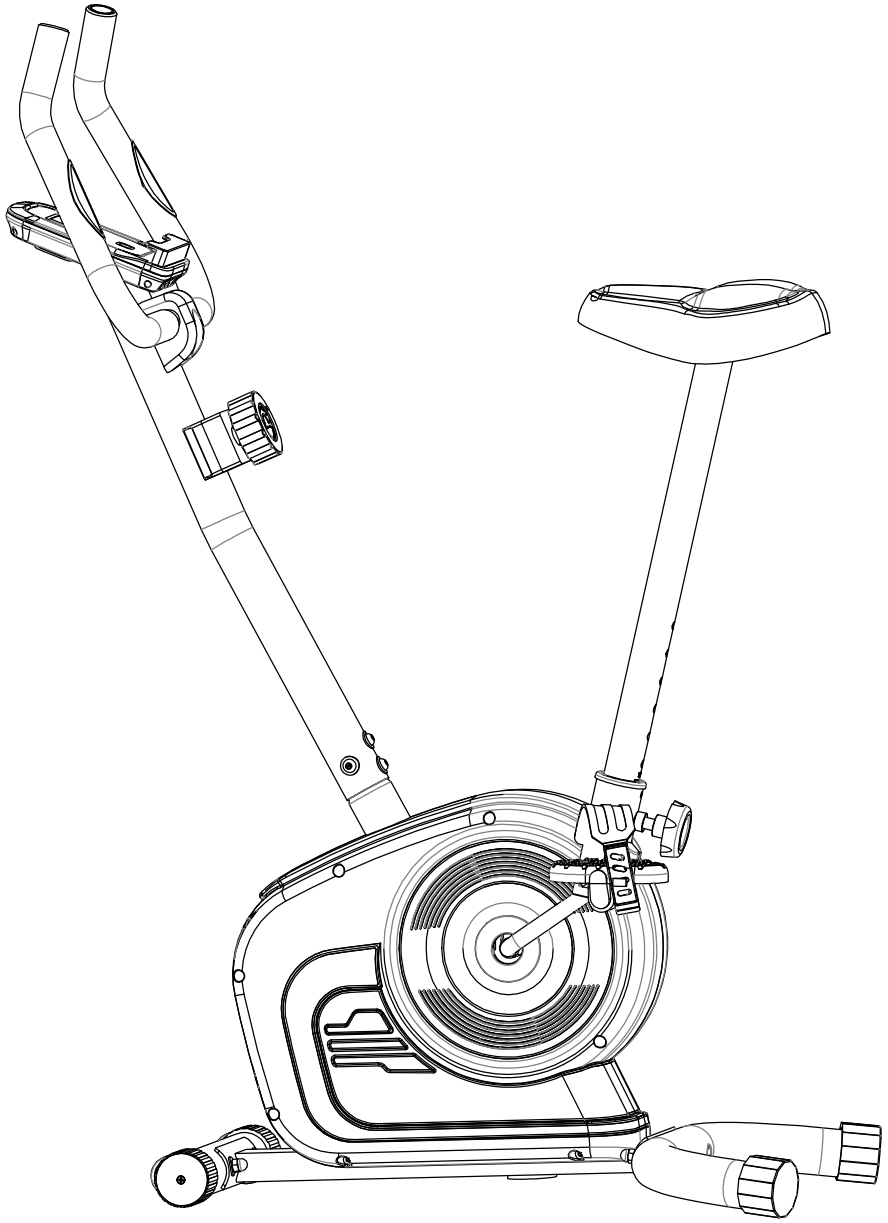

UB120 Upright Bike
OWNER'S MANUAL

PLEASE CAREFULLY READ THIS ENTIRE MANUAL BEFORE OPERATING YOUR NEW UPRIGHT BIKE.

Table Of Contents

Product Registration	**1**
Important Safety Instructions	**2**
Important Operation Instructions	**3**
Exploded View and Parts Lists	**4**
UB120 Assembly Instructions	**7**
Final Considerations	**15**
Exploring Your New Bike	**16**
Troubleshooting	**18**
Manufacturer’s Limited Warranty	**19**

WARRANTY COMPLIANCE

THIS UPRIGHT BIKE IS INTENDED FOR RESIDENTIAL USE ONLY AND IS WARRANTED FOR THE APPLICATION. ANY OTHER APPLICATION VOIDS THIS WARRANTY IN ITS ENTIRETY.

Congratulations On Your New Upright Bike and Welcome to the XTERRA Fitness Family!

Thank you for your purchase of this quality Upright Bike. Your new Upright Bike has been manufactured by one of the leading fitness manufacturers in the world and is backed by one of the most comprehensive warranties available. **XTERRA Fitness** will do all we can to make your ownership experience as pleasant as possible for many years to come.

If you have questions, or if parts are missing or damaged, or you require customer service, call (870) 333-5500. Please have your model number and serial number handy when you call.

Please take a moment to record where you purchased your machine, as well as the date of purchase for future reference. We appreciate your confidence in **XTERRA Fitness** and we will always remember that you are the reason that we are in business. Please complete and mail your registration card today and enjoy your new Upright Bike.

Yours in Health,
XTERRA Fitness

Purchase Location _____

Purchase Date _____

Product Registration

Record Your Serial Number
Please record the Serial Number of this fitness product in the space provided below.

Serial Number _____

Register Your Purchase
The self-addressed product registration card must be completed in full and returned to **XTERRA Fitness**. You can also go to ***www.xterrafitness.com/warranty*** to register online.

UB120_20231206
Version 5.0

Important Safety Instructions

WARNING - Read all instructions before using this appliance.

1. Use this equipment only for its intended use as described in this manual. Do not attempt to ride this bike at high pedal speeds until you have ridden the bike for some time and are comfortable riding at slower pedal speeds.

2. Serious injury or death may occur from over-training. Consult a medical doctor or qualified fitness instructor to determine an exercise program appropriate for your level of fitness.

3. Do not attempt to turn the pedal cranks by hand. Do not touch any driving mechanism while it is in motion as possible injury could occur.

4. In a home setting, keep children away from the bike when it is not in use. Keep children and pets away from the unit while it is in use.

5. Do not attempt to perform dip movements on handlebars.

6. Never drop or insert any object into any opening of the bike.

7. Only use the bike on a stable, level floor.

8. Follow instructions for safe use of the equipment including proper seat position, handlebar position, and use of foot positioning system of pedals. For safe operation, allow for at least 1 foot (30cm) of free space to either side of the unit and 2 feet (60cm) of free space to the rear of the unit.

9. Weight Limit: 250 lbs.

Regularly examine the bike for damage and wear. Inoperable components should be replaced immediately or the equipment should not be used until it is repaired.

Failure to follow all guidelines may compromise the effectiveness of the exercise experience, expose yourself (and possibly others) to injury, and reduce the longevity of the equipment.



WARNING: This product can expose you to chemicals including Toluene and Acrylamide which are known to the State of California to cause cancer and birth defects or other reproductive harm.
For more information go to www.P65Warnings.ca.gov

SAVE THESE INSTRUCTIONS - THINK SAFETY!

Important Operation Instructions

WARNING - AS THE OWNER OF THIS EXERCISE EQUIPMENT, YOU SHOULD INSIST THAT ALL USERS FOLLOW THE SAME GUIDELINES: YOU SHOULD MAKE THIS MANUAL AVAILABLE TO ALL USERS.

1. Obtain a complete physical examination from your medical doctor and enlist a health/ fitness professional's aid in developing an exercise program suitable for your current health status.

2. When working out for the first time, start out slowly for a minimum of five minutes. After your muscles are warmed up, gradually increase the pedaling speed and/or resistance.

3. The speed and duration of your exercise program should always be subject to how you feel. Never permit peer pressure to exceed your personal judgment while exercising.

4. This exercise equipment is not intended for use by persons with reduced physical, sensory or mental capabilities, or lack of experience and knowledge.

5. Overweight or severely de-conditioned individuals should be particularly cautious when using the equipment for the first time. Even though such individuals may not have histories of serious physical problems, they may perceive the exercise to be far less intense than it really is, resulting in the possibility of overexertion or injury.

6. Proper installation and regular maintenance are required to ensure user's safety. Maintenance is the sole responsibility of the owner.

UB120 Exploded View Diagram

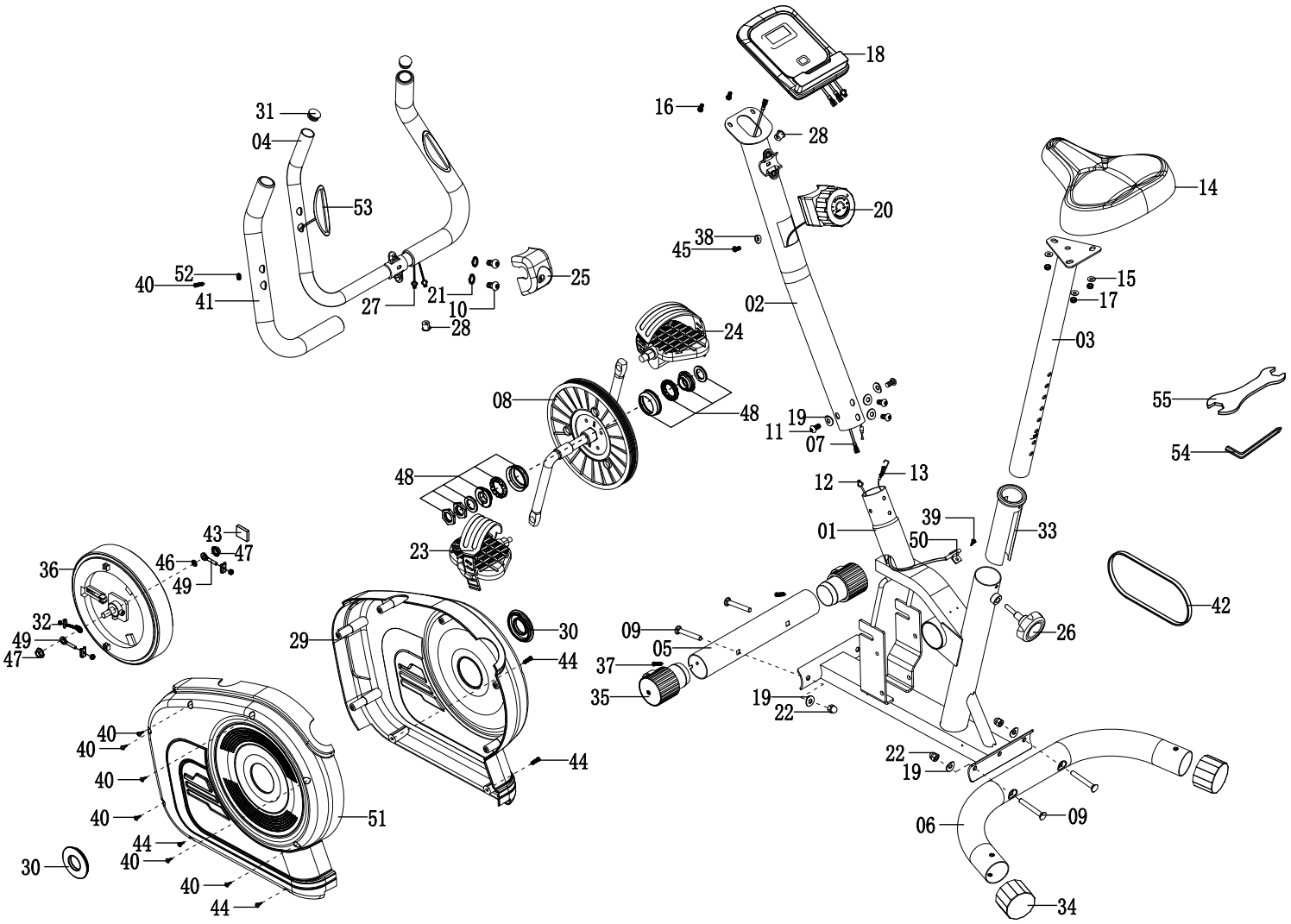

UB120 Parts List

Part No.	Serial No.	Description	Q'TY
1	UB120-BK1036-PART01	Main Frame	1
2	UB120-BK1036-PART02	Front Post	1
3	UB120-BK1036-PART03	Seat Post	1
4	UB120-BK1036-PART04	Handlebar	1
5	UB120-BK1036-PART05	Front Stabilizer	1
6	UB120-BK1036-PART06	Rear Stabilizer	1
7	UB120-BK1036-PART07	Extension Sensor Wire	1
8	UB120-BK1036-PART08	Crank w/ Pulley	1
9	UB120-BK1036-PART09	Carriage Bolt M8x60L	4
10	UB120-BK1036-PART10	Allen Screw M8x30L	2
11	UB120-BK1036-PART11	Allen Screw M8x15L	4
12	UB120-BK1036-PART12	Sensor Wire	1
13	UB120-BK1036-PART13	Lower Tension Wire	1
14	UB120-BK1036-PART14	Seat Cushion KX6614	1
15	UB120-BK1036-PART15	Flat Washer φ8.5xφ20x1.5t	3
16	UB120-BK1036-PART16	Crossed Head Screw M5x10L	2
17	UB120-BK1036-PART17	Nylon Locknut M8x8.0t	3
18	UB120-BK1036-PART18	Console	1
19	UB120-BK1036-PART19	Arc Washer φ8.5xφ20x1.5t	8
20	UB120-BK1036-PART20	8-Level Tension Knob	1
21	UB120-BK1036-PART21	Spring Washer M8	2
22	UB120-BK1036-PART22	Domed Nut M8x16t	4
23	UB120-BK1036-PART23	Pedal L (1/2" axle)	1
24	UB120-BK1036-PART24	Pedal R (1/2" axle)	1
25	UB120-BK1036-PART25	Cover for Handlebar	1
26	UB120-BK1036-PART26	Club Knob M12	1
27	UB120-BK1036-PART27	Pulse Wire	2
28	UB120-BK1036-PART28	Grommet	2
29	UB120-BK1036-PART29	Chain Cover R	1
30	UB120-BK1036-PART30	Cover for Crank	2
31	UB120-BK1036-PART31	End Cap For Handlebar	2
32	UB120-BK1036-PART32	Flywheel Adjustor Assembly φ18x58L	1
33	UB120-BK1036-PART33	Seat Post Bushing	1

UB120 Parts List

34	*UB120-BK1036-PART34*	*Transportation Wheel*	*2*
35	*UB120-BK1036-PART35*	*Leveling End Cap*	*2*
36	*UB120-BK1036-PART36*	*Flywheel Assembly*	*1*
37	UB120-BK1036-PART37	Crossed Head Self-Tapping Screw st4.2x12L	2
38	UB120-BK1036-PART38	Curved Washer φ5.5xφ20x1.5t	1
39	UB120-BK1036-PART39	Crossed Head Self-Tapping Screw ST3.2x12L	1
40	UB120-BK1036-PART40	Crossed Head Self-Tapping Screw st4.2x20L	8
41	UB120-BK1036-PART41	Foam Grip For Handlebar	2
42	UB120-BK1036-PART42	Belt 310J J5	1
43	UB120-BK1036-PART43	EVA Pad 38Lx18Wx3t	1
44	UB120-BK1036-PART44	Self-Tapping Screw st4.2x20L	4
45	UB120-BK1036-PART45	Crossed Head Screw M5x40L	1
46	UB120-BK1036-PART46	Flat Washer φ12.5xφ20x1.5t	1
47	UB120-BK1036-PART47	Flange Nut M10	2
48	UB120-BK1036-PART48	Bearing Assembly	1
49	UB120-BK1036-PART49	Flywheel Adjustor	2
50	UB120-BK1036-PART50	Sensor Bracket	1
51	UB120-BK1036-PART51	Chain Cover L	1
52	UB120-BK1036-PART52	Flat Washer φ4.3xφ12x1t	2
53	UB120-BK1036-PART53	Pulse Sensor	2
54	UB120-BK1036-PART54	Allen Key 80Lx30W	1
55	UB120-BK1036-PART55	Multifunctional Wrench	1

UB120 Assembly Pack Checklist

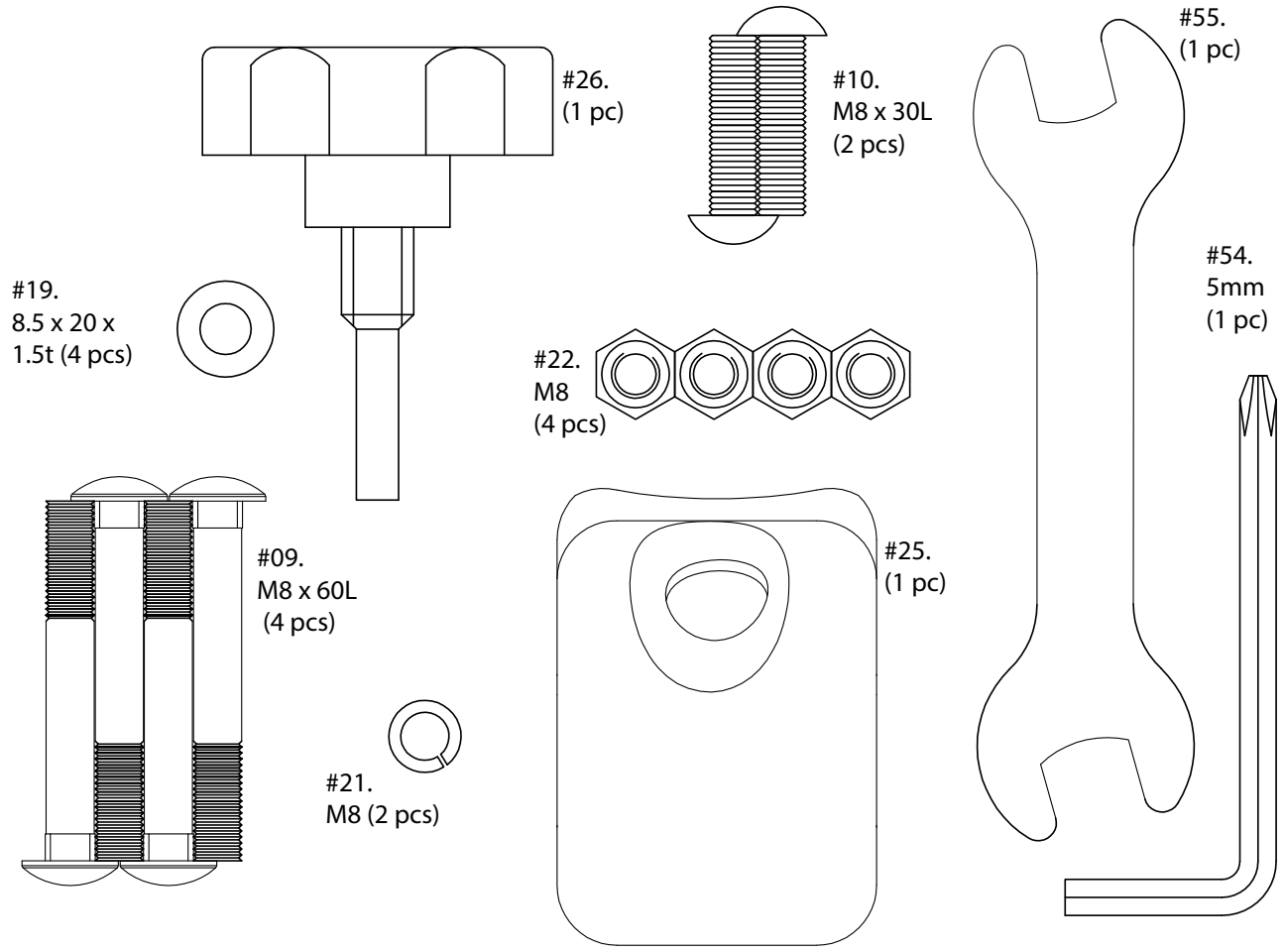

No.	Description	Q'ty
09	Carriage bolt M8*60L	4
10	Allen screw M8*30L	2
19	Curved washer φ8.5xφ20x1.5t	4
21	Spring Washer M8	2
22	Domed nut M8	4
25	Cover for handlebar	1
26	Club knob	1
54	Allen key 5mm	1
55	Wrench	1

UB120 Assembly Pack Checklist

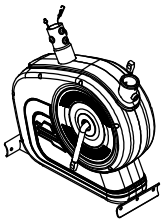 No. 01	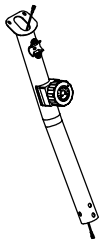 No. 02	 No. 03
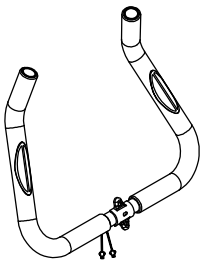 No. 04	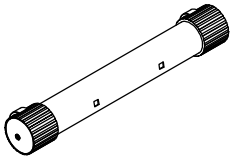 No. 05	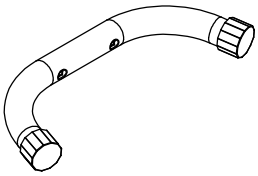 No. 06
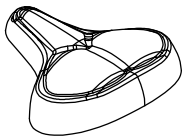 No. 14	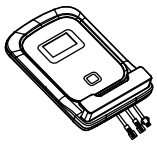 No. 18	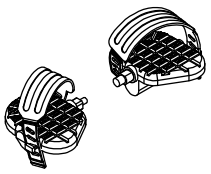 No. 23/24

PART NO.	DESCRIPTION	Q'TY
01	Main Frame	1
02	Front post	1
03	Seat post	1
04	Handlebar	1
05	Front stabilizer	1
06	Rear stabilizer	1
14	Seat	1
18	Console	1
23/24	Pedal L& R	1/1

1 Stabilizers and Main Frame

09	4pcs	M8 x 60L
19	4pcs	8.5 x 20 x 1.5t
22	4pcs	M8
55		Wrench

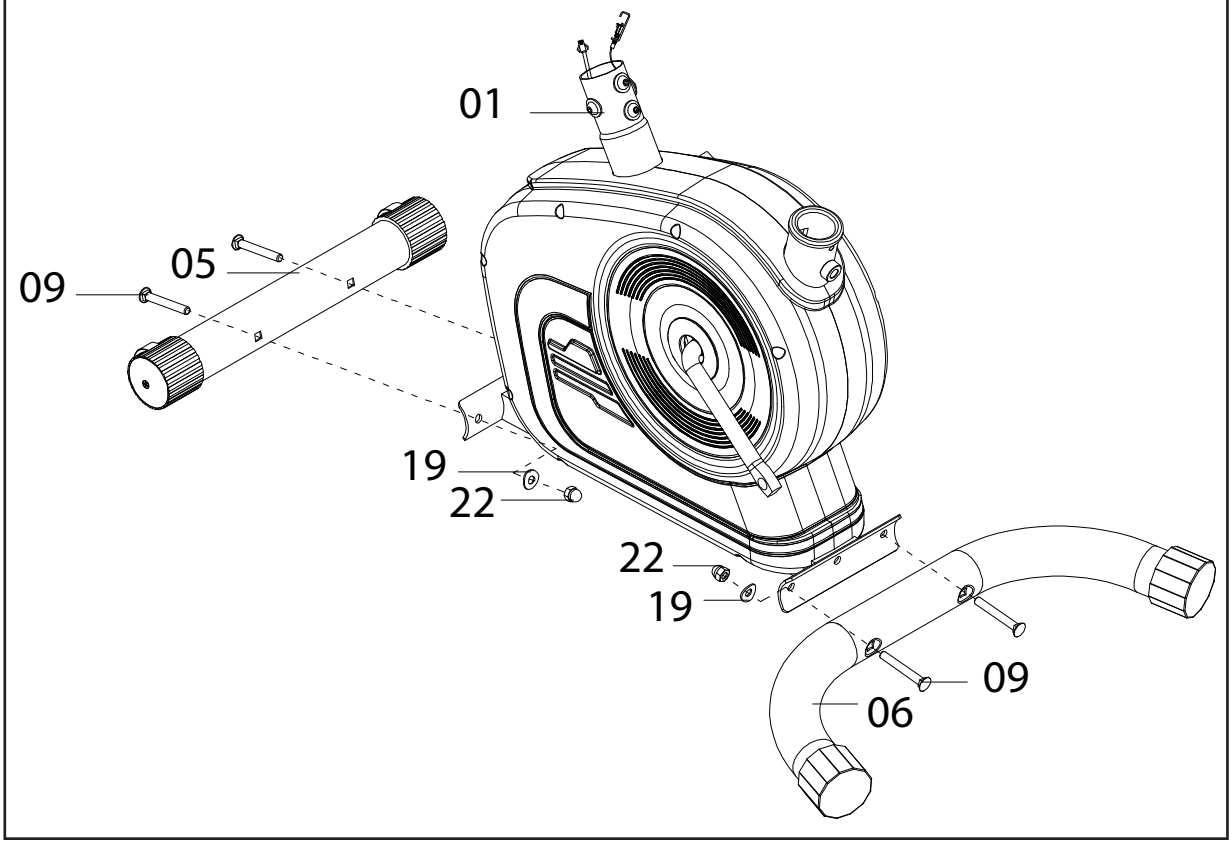

1. Attach the **Front Stabilizer (No. 05)** to **Main Frame (No. 01)** using 2 **Carriage Bolts (No. 09)**, 2 **Arc Washers (No. 19)** and 2 **Domed Nuts (No. 22)**.
2. Attach **Rear Stabilizer (No. 06)** to **Main Frame (No. 01)** using with 2 **Carriage Bolts (No. 09)**, 2 **Arc Washers (No. 19)** and 2 **Domed Nuts (No. 22)**.

2 Attaching the Tension Wires and the Front Support

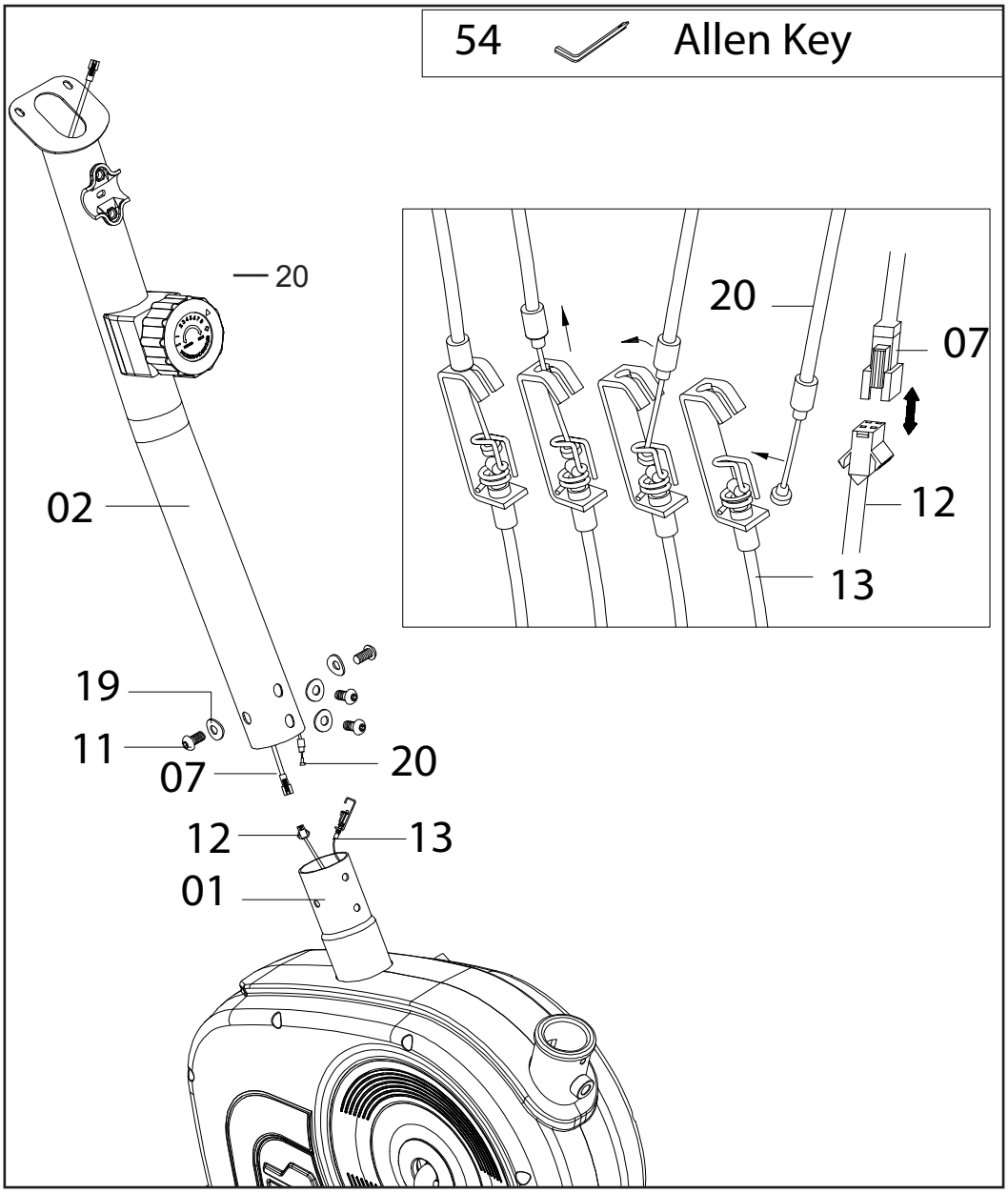

1. Remove the pre-installed 4 **Allen Screws (No. 11)** & 4 **Arc Washers (No. 19)** from **Front Post (No. 02)**.
2. Turn the **Tension Knob (No. 20)** to the 8th (highest) level, then connect it to the **Lower Tension Wire (No. 13)**.
3. Connect **Extension Sensor Wire (No. 07)** with **Sensor Wire (No. 12)**.
4. Insert the **Front Post (No. 02)** into the **Main Frame (No. 01)** and secure with 4 **Allen Screws (No. 11)** and 4 **Arc Washers (No. 19)**.

3 Installing the Seat

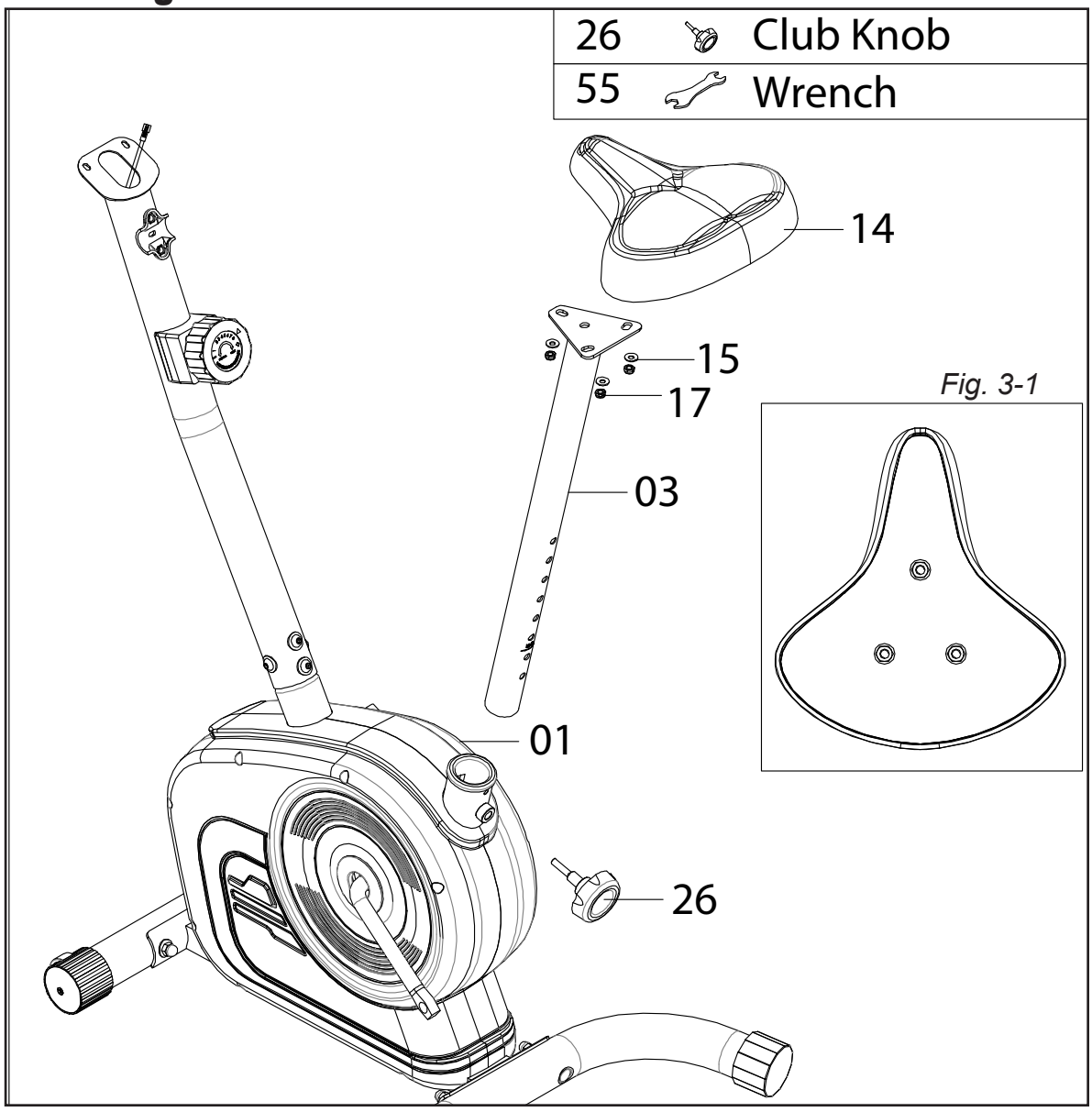

Fig. 3-1

1. Remove the pre-installed 3 **Flat Washers (No. 15)** and 3 **Nylon Locknuts (No.17)** from the back of **Seat (No. 14)** (see fig. 3-1).
2. Attach the **Seat (No. 14)** to **Seat Post (No. 03)**, securing with the 3 **Flat Washers (No. 15)** and 3 **Nylon Locknuts (No. 17)** which had been pre-assembled on the back of **Seat (No. 14)**.
3. Insert **Seat Post (No. 03)** into the **Main Frame (No. 01)**. Line up the holes and fasten the **Seat Post (No. 03)** in right position with **Club Knob (No. 26)**.

4 Installing the Pedals

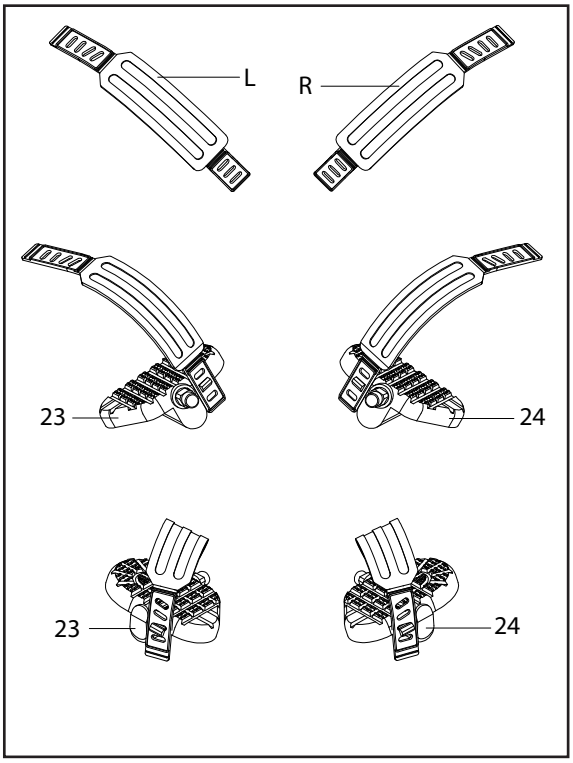

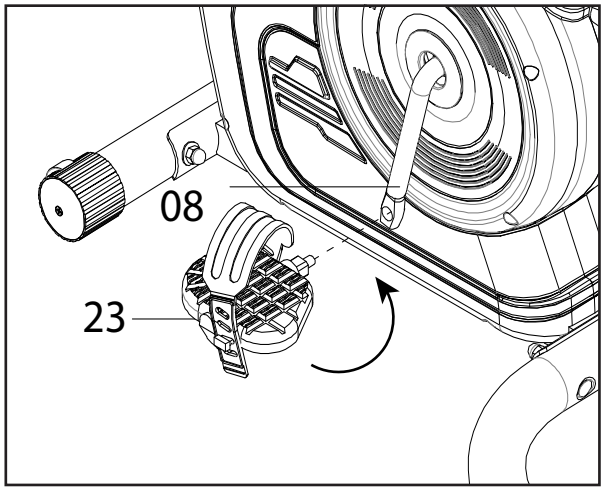

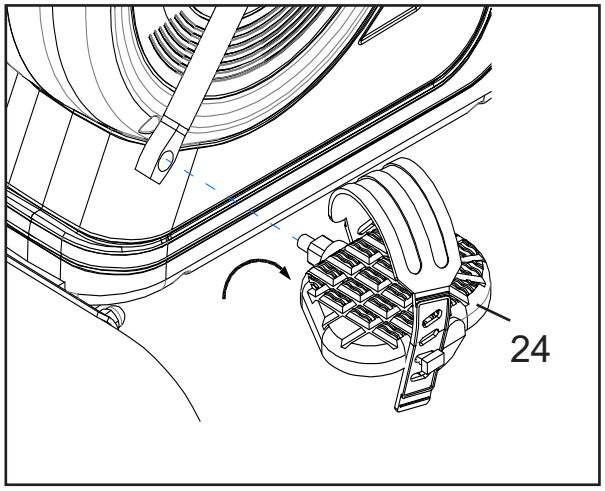

1. Attach the **(L) Strap** to the **Left Pedal (No. 23)**, and you can adjust the strap to the length you need.
   Use the same method to attach the **(R) Strap** to the **Right Pedal (No. 24)**.
2. Connect **Left Pedal (No. 23)** to the left side of **Crank w/ Pulley (No. 08)**, twist it counterclockwise to tighten.
3. Connect the **Right Pedal (No. 24)** to the right side of **Crank w/ Pulley (No. 08)**, twist it clockwise to tighten.

   NOTE: The straps should face outwards and the pedals should be mounted to their respective sides to be functional.

5 Handlebars

10		(2 pcs) M8 x 30L
21		(2 pcs) M8
54		Allen Key

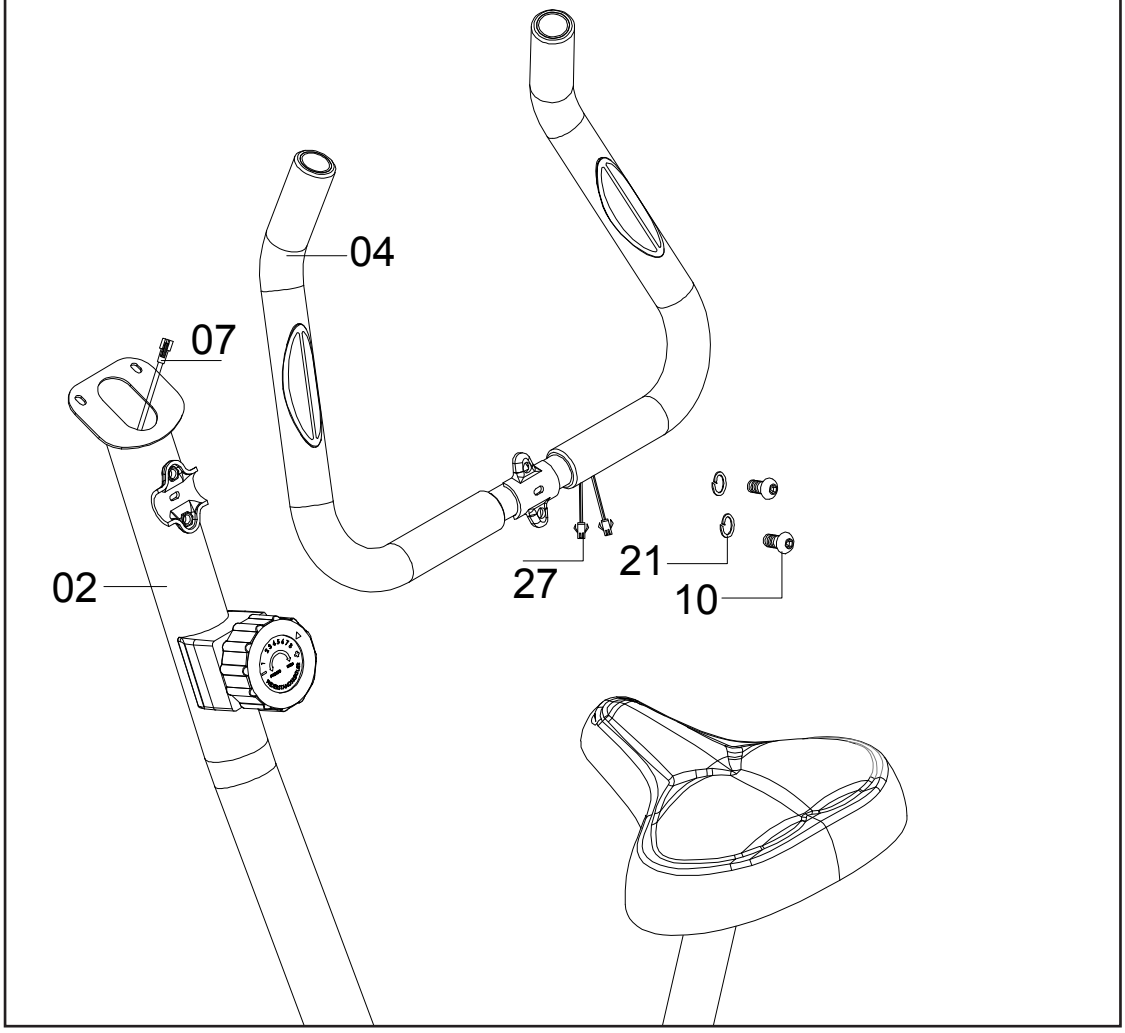

1. Connect the **Handlebar (No. 04)** to **Front Post (No. 02)**, secure with 2 **Spring Washers (No. 21)** and 2 **Allen Screws (No. 10)**.

6 Installing the Console

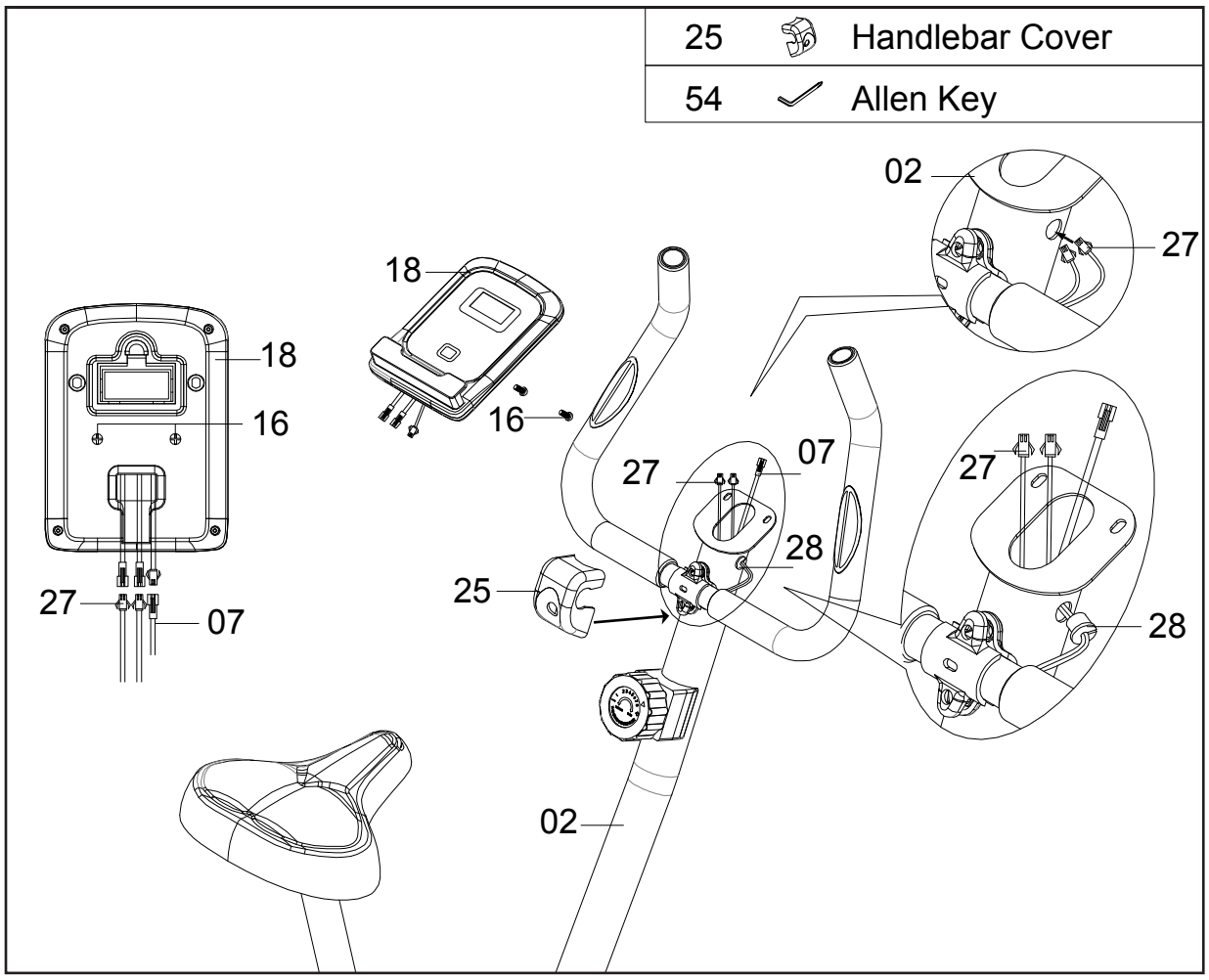

1. Remove the pre-installed 2 **Crossed Head Screws (No. 16)** from the back of **Console (No. 18)**, and also remove the **Grommet (No. 28)** from the **Front Post (No. 02)**.
2. Pull the **Pulse Wires (No. 27)** through the **Grommet (No. 28)** and then through the hole of the **Front Post (No. 02)**, finally plug the **Grommet (No. 28)** into the **Front Post (No. 02)**.
3. Connect the **Pulse Wire (No. 27)** and **Extension Sensor Wire (No. 07)** with the wire from the **Console (No. 18)**, then tighten the **Console (No. 18)** with 2 **Crossed Head Screws (No. 16)** to the **Front Post (No. 02)**.
4. Press the **Cover for Handlebar (No. 25)** into the handlebar.

***NOTE: CHECK TO ENSURE THAT ALL BOLTS AND NUTS ARE TIGHTENED BEFORE USING THE MACHINE.**

Final Considerations

• Tighten all bolts/nuts securely to complete your installation.

• The bike can be cleaned with a damp cloth and mild non-abrasive detergent. Do not use solvents.

• Make sure to tighten both pedals securely to the pedal crank arms as instructed.

• Store the bike Indoors. Excessive moisture can cause rust to the frame and damage to the electronics.

• Place the bike in a such a way that there is room on all side of the bike to safely mount and dismount. We recommend a minimum of 2 feet all around the bike to safely access the bike.

Adjusting Resistance

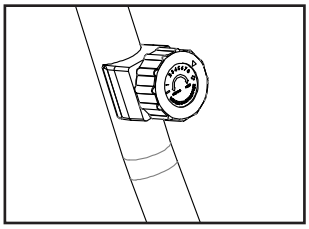

• Use the T**ension Knob (No. 20)** on the **Front Post (No. 2)** to adjust the resistance. Level 1 is the minimum resistance.

Transporting the Bike

• There is a set of transport wheels on the Front Stabilizer. To move the bike carefully tilt the handlebar forwards and roll away.

Exploring Your New Bike
UB120 Console



Getting Familiar with the Control Panel

Functions	SCAN	Every 6 seconds
	TIME	0:00 ~ 99:59
	SPEED	0.0 ~ 999.9 KM/H (MILE/H)
	DISTANCE	0.00 ~ 999.9 KM (MILE)
	CALORIES	0.0 ~ 999.9 CAL
	ODOMETER	0.0 ~ 9999 KM (MILE)
	PULSE	40 ~ 240 BPM
BATTERY TYPE		2 AAA or UM 4
OPERATING TEMPERATURE		0°C ~ +40°C, 32˚F ~ 104˚F
STORAGE TEMPERATURE		-10°C ~ +60°C, 14˚F ~ 140˚F

The console turns on when you start pedaling or when you press a key.

The console turns off automatically after 4 minutes of inactivity.

Key Functions

Button Functions

MODE: Press to select functions. Press the button and hold for two seconds to reset all functions to zero, except ODOMETER.

SCAN: Press MODE button until "▼" appears at SCAN position, the console displays: time, speed, distance, calories, odometer and pulse, in sequence for 6 seconds at a time

TIME: Displays the time from exercise start to the end

DISTANCE: Displays the distance from exercise start to the end

CALORIES: Displays the calories burned from the exercise start to the end.

The calorie readout is an estimate for an average user. It should be used only as comparison between workouts on this unit.

ODOMETER: Display the total accumulated distance you have traveled. The odometer does not reset unless you remove the batteries.

PULSE: Displays an average current heart beat rate in beats per minute (BPM). To use this feature, place hands on the pulse grips and hold for 6 ~ 7 seconds to get a more accurate reading.
Please note that due to contact delay, the heart rate will be higher than the actual heart rate during the first 2 ~ 3 seconds of measurement, then will return to normal level. The measurement value shouldn't be regarded as the basis of medical treatment.

Troubleshooting

Problem	Solution
When display shows all 0's, faded numbers, incomplete numbers or blank screen	• Remove the computer and check the wire that comes from the computer is properly connected to the wire that comes from the Upright. • Check that the batteries are correctly positioned and are in proper contact with the battery springs. • The batteries in the computer may be dead. Remove and replace with new batteries.

Manufacturer's Limited Warranty

Effective December 06, 2023 - UB120 Upright Bike LIMITED WARRANTY

XTERRA Fitness Inc. warrants all its home use Upright Bike parts for a period of time listed below, from the date of retail sale, as determined by a sales receipt or in the absence of a sales receipt, eighteen (18) months from the original factory shipping date. XTERRA Fitness's responsibilities include providing new or remanufactured parts, at XTERRA Fitness's option, and technical support to our independent dealers and servicing organizations. In the absence of a dealer or service organization, these warranties will be administered by XTERRA Fitness directly to a consumer. The warranty period applies to the following components:

Home Use Limited WARRANTY

Frame	Parts	Labor
1 Year	90 Days	None

NORMAL RESPONSIBILITIES OF THE CONSUMER

This warranty applies only to products in ordinary household use. The consumer is responsible for the items listed below:

1. The warranty registration card must be completed and returned to the address listed on the card within 10 days of the original purchase to validate the manufacturer's limited warranty or register online at http://www.xterrafitnessstore.com/warrantyreg.html.
2. Proper use of the Upright Bike in accordance with the instructions provided in this manual, including maintenance.
3. Proper connection to a power supply of sufficient voltage, replacement of blown fuses, repair of loose connections or defects in house/facility wiring.
4. Expenses for making the Upright Bike accessible for servicing, including any item that was not part of the Upright Bike at the time it was shipped from the factory.
5. Damages to the Upright Bike finish during shipping, installation or following installation.

EXCLUSIONS

This warranty does not cover the following:

1. CONSEQUENTIAL, COLLATERAL, OR INCIDENTAL DAMAGES SUCH AS PROPERTY DAMAGE AND INCIDENTAL EXPENSES RESULTING FROM ANY BREACH OF THIS WRITTEN OR ANY IMPLIED WARRANTY. Note: Some states do not allow the exclusion or limitation of incidental or consequential damages, so this limitation or exclusion may not apply to you.
2. Service call reimbursement to the consumer. Service call reimbursement to the dealer that does not involve malfunction or defects in workmanship or material, for units that are beyond the warranty period, for units that are beyond the service call reimbursement period, for Upright Bikes not requiring component replacement, or Upright Bikes not in ordinary household use.
3. Damages caused by services performed by persons other than authorized XTERRA Fitness service companies, use of parts other than original XTERRA Fitness parts, or external causes such as alterations, modifications, abuse, misuse, accident, improper maintenance, inadequate power supply, or acts of God.
4. Products with original serial numbers that have been removed or altered.
5. Products that have been; sold, transferred, bartered, or given to a third party.
6. Products that are used as store display models.
7. Products that do not have a warranty registration on file at XTERRA Fitness, Inc. XTERRA Fitness reserves the right to request proof of purchase if no warranty record exists for the product.
8. Product use in any environment other than a residential setting.
9. THIS WARRANTY IS EXPRESSLY IN LIEU OF ALL OTHER WARRANTIES EXPRESSED OR IMPLIED, INCLUDING THE WARRANTIES OF MERCHANTABILITY AND/OR FITNESS FOR A PARTICULAR PURPOSE.

SERVICE

Keep your bill of sale. Twelve (12) months from the date on the bill of sale or eighteen (18) months from the date of factory shipping as determined by the serial number establishes the warranty period should service be required. If service is performed, it is in your best interest to obtain and keep all receipts. This written warranty gives you specific legal rights. You may also have other rights that vary from state to state. Service under this warranty must be obtained by following these steps, in order:

1. Contact your selling authorized XTERRA Fitness dealer. OR
2. Contact your local authorized XTERRA Fitness service organization.
3. If there is a question as to where to obtain service, contact our service department at (800) 258-8511.
4. XTERRA Fitness's obligation under this warranty is limited to repairing or replacing, at XTERRA Fitness's option, the product through one of our authorized service centers. All repairs must be preauthorized by XTERRA Fitness. If the product is shipped to a service center freight charges to and from the service center will be the customer's responsibility. For replacement parts shipped while the product is under warranty, the customer will be responsible for shipping and handling charges. For in-home service, the customer will be responsible for a trip charge. There will be an additional trip charge if the customer is located over 100 miles from the nearest service center.
5. The owner is responsible for adequate packaging upon return to XTERRA Fitness. XTERRA Fitness is not responsible for damages in shipping. Make all freight damage claims with the appropriate freight carrier. DO NOT SHIP ANY UNIT TO OUR FACTORY WITHOUT A RETURN AUTHORIZATION NUMBER. All units arriving without a return authorization number will be refused.
6. For any further information, or to contact our service department by mail, send your correspondence to:

XTERRA Fitness, Inc.
P.O. Box 2037
Jonesboro, AR 72402-2037

Product features or specifications as described or illustrated are subject to change without notice. All warranties are made by XTERRA Fitness, Inc. This warranty applies only in the 48 contiguous United States. NOTE: This does not apply to Alaska or Hawaii.

3000 Nestle Road Jonesboro, AR 72401 - Phone: 870-336-4286 - Fax: 870-935-7611

©2019 All Rights Reserved.