XTERRA FITNESS



WS200 TREADMILL

WS200_OwnersManual_120082_20251120

Online Support

If you require assistance or are experiencing issues with your XTERRA Machine, please contact customer care for additional help.

1-800-258-8511

questions@xterrafitness.com

Warranty Registration

Scan to quickly and easily register your new XTERRA Fitness machine.

Table of Contents

Product Registration 3

Warning / Safety Instructions

Product Labels 4

Safety Instructions 5

Electrical Safety 6

Grounding & Location Requirements 7

Parts & Assembly

Parts of your treadmill 8

Pack List 9

Assembly 10

Setting Up Your Unit 13

Safety Stop Key 16

Technology and Features

About Your Machine 17

Console Screen - Overview 18

Window Display 19

Functions 20

How to use the Treadmill 21

Using the XF Connect App 22

Wearing the Chest Strap 23

Heart Rate Exertion 24

Maintenance

Maintenance & Care 26

Deck Lubrication 28

Belt & Deck Cleaning 29

Exploded View Diagram 30

Warranty 31

Troubleshooting 34

FCC Warning 36

PRODUCT REGISTRATION

Congratulations on your new treadmill, and welcome to the XTERRA Fitness family!

Thank you for your purchase of this quality unit from XTERRA Fitness. Your new unit was manufactured by one of the leading fitness manufacturers in the world and is backed by one of the most comprehensive warranties available. XTERRA Fitness will do all we can to make your ownership experience as pleasant as possible for many years to come.

If you have questions, or if parts are missing or damaged, or you require customer service, call (870) 336-4286. Please have your model number and serial number handy when you call.

Please take a moment at this time to record the name of the dealer, their telephone number, and the date of purchase below to make any future, needed contact easy. We appreciate your support and we will always remember that you are the reason that we are in business.

Serial Number	
Date of Purchase	
Dealer / Place of Purchase	

WARRANTY REGISTRATION

Use your smartphone to scan the QR code above to quickly and easily register your new XTERRA Fitness machine.

You can also go to **xterrafitness.com/warranty** under the Support tab to register online.

Version: 3.0
Revision: 11/20/25

PRODUCT LABELS





SERIAL NUMBER STICKER

This sticker will be found on the rear of the motor cover. Please record the number below the barcode for the purpose of registering your treadmill's warranty.



PROPOSITION 65 WARNING

This sticker will be found on the rear of the motor cover. The State of California requires us to inform you that this unit was manufactured using chemicals that could cause harm with improper use.



SAFETY WARNING STICKER

This sticker will be found on the interior side of your treadmill's upright. The same warning can be found in this manual. Please read and be aware of the precautions before operating your unit.

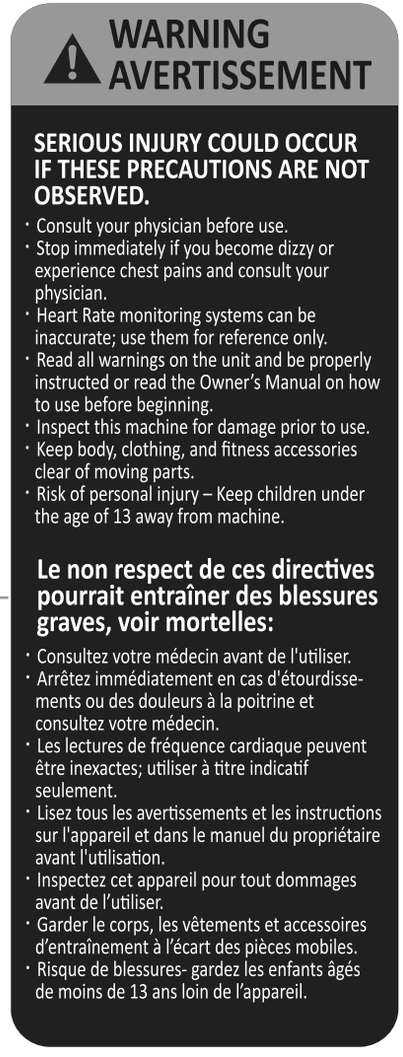

SAFETY INSTRUCTIONS

When using an electrical appliance, basic precautions should always be followed, including the following. Read all instructions before using this appliance.

DANGER - To reduce the risk of electric shock:
Always unplug this appliance from the electrical outlet immediately after using and before cleaning.

WARNING - To reduce the risk of burns, fire electric shock, or injury to persons:

1. An appliance should never be left unattended when plugged in. Unplug from outlet when not in use, and before putting on or taking off parts.
2. Do not operate under blanket or pillow. Excessive heating can occur and cause fire, electric shock, or injury to persons.
3. This appliance is not intended for use by persons with reduced physical, sensory or mental capabilities, or lack of experience and knowledge, unless they have been given supervision or instruction concerning use of the appliance by a person responsible for their safety. Keep children under the age of 13 away from this machine.
4. Close supervision is necessary when this appliance is used by, on, or near children, invalids, or disabled persons. Do not use attachments not recommended by the manufacturer. Never operate this appliance if it has a damaged cord or plug, if it is not working properly, if it has been dropped or damaged, or dropped into water. Return the appliance to a service center for examination and repair.
5. Never operate this appliance if it has a damaged cord or plug, if it is not working properly, if it has been dropped or damaged, or dropped into water. Return the appliance to a service center for examination and repair.
6. Do not carry this appliance by supply cord or use cord as a handle.
7. Keep the cord away from heated surfaces.
8. Never operate the appliance with the air openings blocked. Keep the air openings free of lint, hair, and the like.
9. Never drop or insert any object into any opening.
10. Do not use outdoors.
11. Do not operate where aerosol (spray) products are being use or where oxygen is being administered.
12. Connect this appliance to a properly grounded outlet only. See Grounding Instructions.
13. The appliance is intended for household use.
14. To disconnect, turn all controls to the off position, then remove the plug from the outlet.
15. Do not operate equipment on deeply padded, plush or shag carpet. Damage to both carpet and equipment may result.
16. Before beginning this or any exercise program, consult a physician. This is especially important for persons over the age of 35 or persons with pre-existing health conditions.
17. Keep hands away from all moving parts.
18. The pulse sensors are not medical devices. Various factors, including the user's movement, may affect the accuracy of heart rate readings. The pulse sensors are intended only as exercise aids in determining heart rate trends in general.
19. Do not attempt to use your equipment for any purpose other than for the purpose it is intended.
20. Wear proper shoes. High heels, dress shoes, sandals or bare feet are not suitable for use on your equipment. Quality athletic shoes are recommended to avoid leg fatigue.
21. **User Weight Limit: 265 lbs.**

Please ensure that you review and adhere to the user weight restrictions and power requirements of your new machine. Failure to do so may result in serious injury or damage to your machine.

ELECTRICAL SAFETY

WARNING!

Route the power cord away from any moving part of the unit including the elevation mechanism and transport wheels.

NEVER remove any cover without first disconnecting AC power. If voltage varies by ten percent (10%) or more, the performance of your unit may be affected. **Such conditions are not covered under your warranty.** If you suspect the voltage is low, contact your local power company or a licensed electrician for proper testing.

NEVER expose this unit to rain or moisture. This product is **NOT** designed for use outdoors, near a pool or spa, or in any other high humidity environment. The temperature specification is 40 degrees C, and humidity is 95%, non-condensing (no water drops forming on surfaces).

Circuit breakers: Avoid AFCI/GFCI circuit breakers if possible. These breakers may trip occasionally during exercise because of the high inrush currents of the unit drive electronics and motor. This is an issue that affects all unit brands. New laws in your area may require these breakers. If you do have these breakers and outlets in your home, and are experiencing nuisance tripping, you should check if there are any other devices plugged into the same circuit. Some examples of devices that may also cause tripping are fluorescent lights with electronic ballasts, coffee maker, space heater, hair drier.

Optimally the unit should be the only device plugged into the circuit. Our units have surge suppressors built in to help avoid nuisance tripping. We have tested several AFCI/GFCI breakers and outlets with our products. Brands we have tested are: Eaton (Cutler Hammer Series), Leviton (Smart lock pro) and Schneider Electric (Canadian home series). These breakers do not trip in our testing, when connected to our units, as long as no other devices are plugged into the same circuit.

- **NEVER** operate this unit without reading and completely understanding the results of any operational change you request from the computer.
- Understand that changes in speed and incline do not occur immediately. Set your desired work level on the computer console and release the adjustment key. The computer will obey the command gradually.
- **NEVER** use your unit during an electrical storm. Surges may occur in your household power supply that could damage unit components. Unplug the unit during an electrical storm as a precaution.
- Use caution while participating in other activities while walking on your unit; such as watching television, reading, etc. These distractions may cause you to lose balance which may result in serious injury.
- Do not use excessive pressure on console control keys. They are precision set to function properly with little finger pressure.

GROUNDING & LOCATION REQUIREMENTS

This product must be grounded. If the unit should malfunction or breakdown, grounding provides a path of least resistance for electric current, reducing the risk of electric shock. This product is equipped with a cord having an equipment-grounding plug. The plug must be plugged into an appropriate outlet that is properly installed and grounded in accordance with all local codes and ordinances.

DANGER - Improper connection of the equipment-grounding conductor can result in a risk of electric shock. Check with a qualified electrician or serviceman if you are in doubt as to whether the product is properly grounded. Do not modify the plug provided with the product if it will not fit the outlet; have a proper outlet installed by a qualified electrician.

This product is for use on a nominal 120-volt circuit, and has a grounding plug that looks like the plug illustrated below. A temporary adapter that looks like the adapter illustrated below may be used to connect this plug to a 2-pole receptacle as shown below if a properly grounded outlet is not available. The temporary adapter should be used only until a properly grounded outlet, (shown below) can be installed by a qualified electrician. The green colored rigid ear-lug, or the like, extending from the adapter, must be connected to a permanent ground such as a properly grounded outlet box cover. Whenever the adapter is used, it must be held in place by a metal screw.

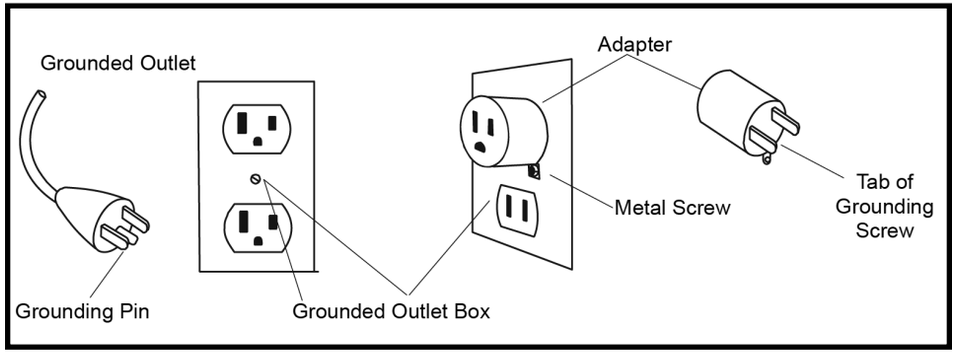

Location Requirements

After assembling your treadmill, you'll need to make sure you've installed it in a safe area.

- We recommend that you leave an area of at least 20in on the front, and sides of your machine. The front of the unit is where the motor is located.
- We recommend that you leave an area of at least 6ft behind the treadmill.
- Install your treadmill in an area where children and pets cannot access it.
- Always keep the area around your treadmill clear of furniture, exercise equipment and other debris.
- Do not install your treadmill on deeply padded, plush, or shag carpet.

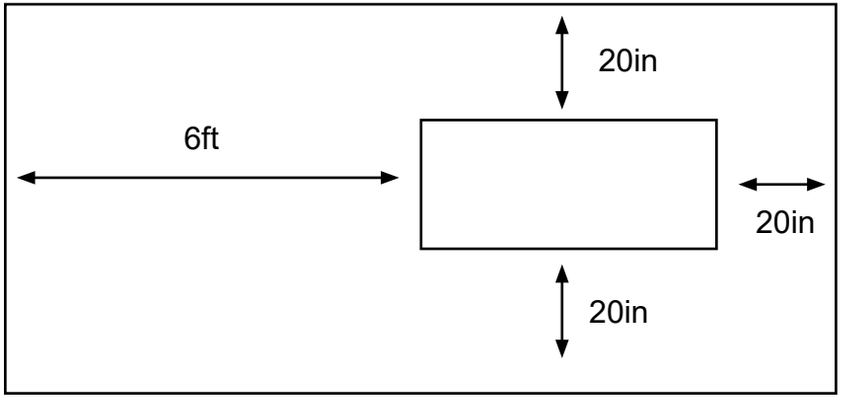

PARTS OF YOUR TREADILL

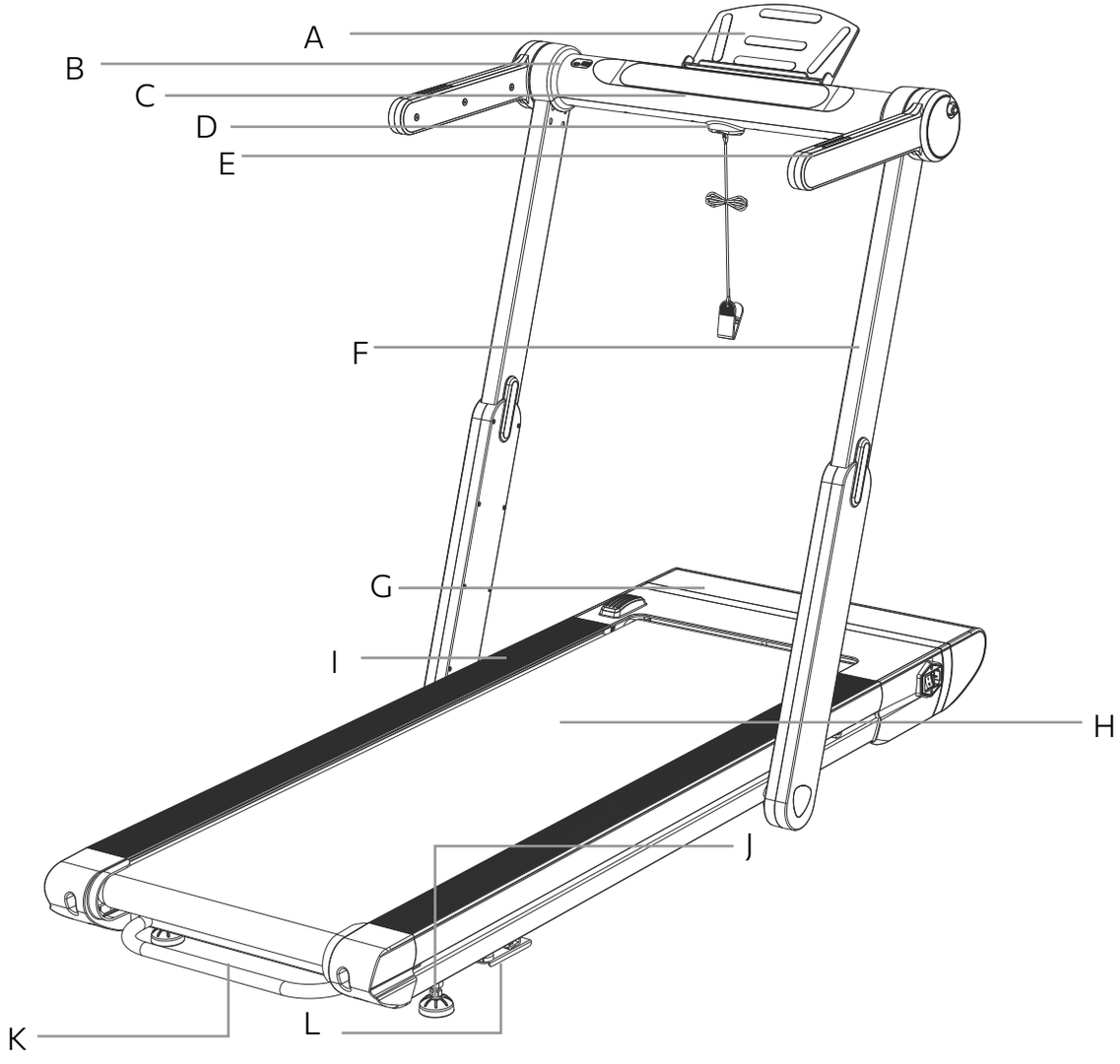

A. Tablet Holder
B. USB Type A & C Charger Port*
C. LED Screen
D. Safety stop key
E. Hand pulse sensors
F. Uprights
G. Motor cover
H. Belt
I. Side rails
J. Levelers
K. Transport Handlebar
L. Upright Stopper

** USB A and C ports are for charging purposes only; USB is 5V / 1A.*

PACK LIST

No	Description	Quantity
1	4.2 x 19mm Bolts	6
2	5mm Allen Key	1
3	6mm Allen Key	1
4	Wrench	1
5	Tablet Holder	1
6	Power Cord	1
7	Safety Key	1
8	Silicone Oil	2
9	Manual	1

ASSEMBLY

1. Take out the treadmill from the carton and lay it aside on the smooth ground.

Lift the Upright Crossbar (as shown in A) until it clicks into place at the top height.

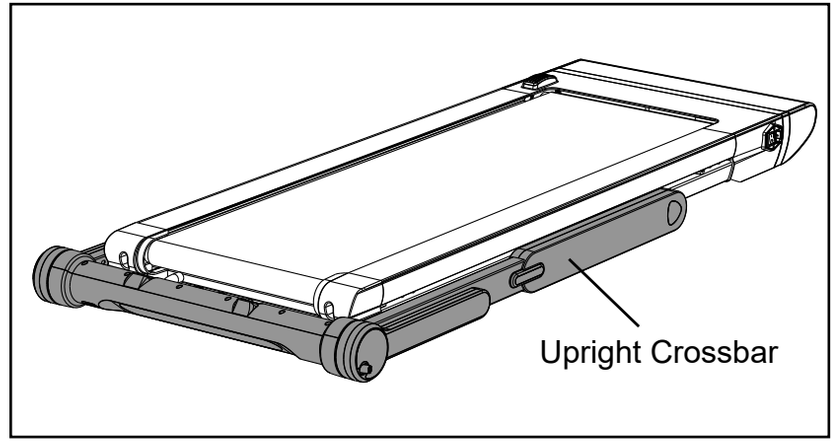

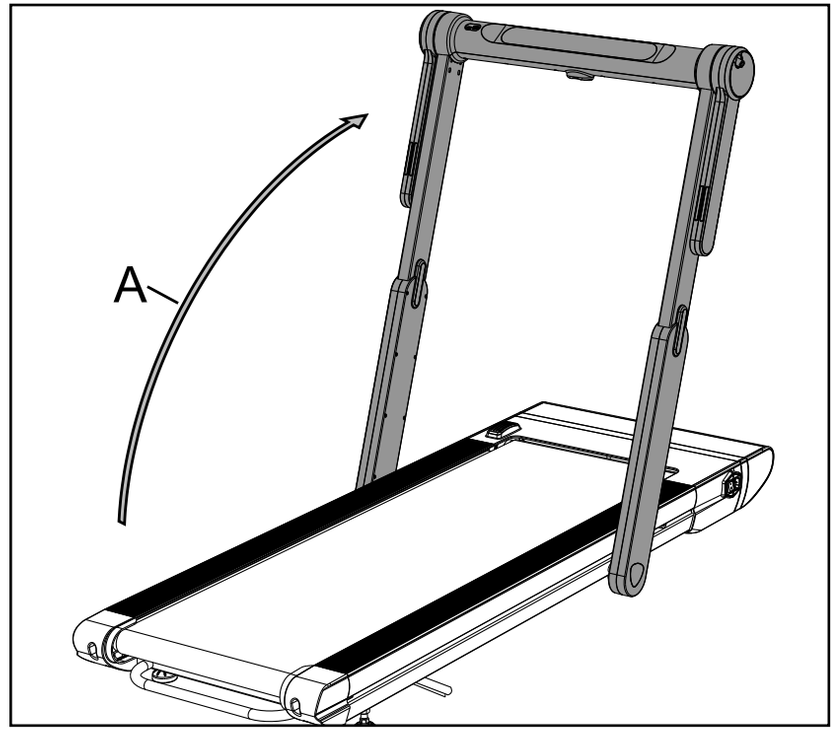

ASSEMBLY - CONTINUED

2. Press and hold the red button on the handle with your thumb as shown in step (B), and at the same time lift the handle up until the handle is locked, and release the button during the process of lifting the handle; (the same operation on the other side)

As shown in step (C), rotate the left and right Handlebar Stoppers to the bottom of the main frame in the direction of the arrow so that they are not exposed to avoid damage.

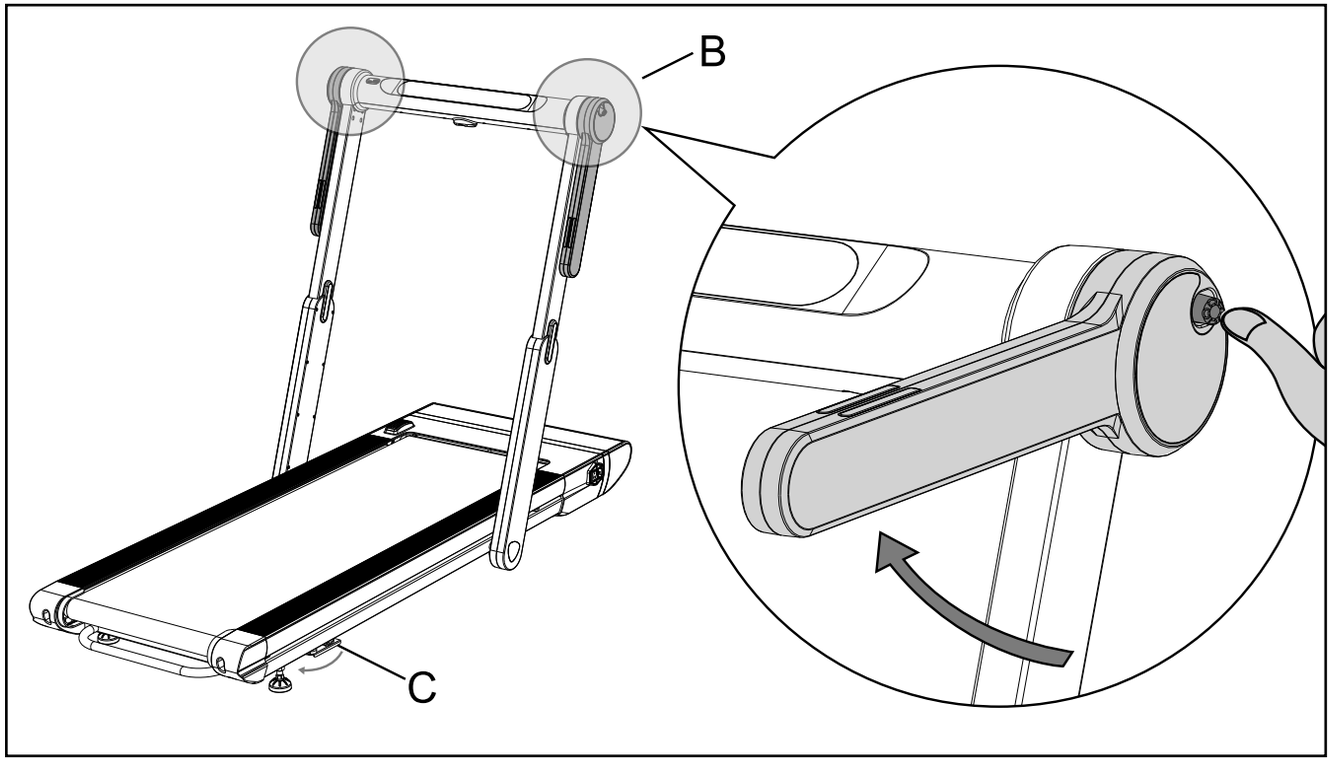

ASSEMBLY - CONTINUED

3. Fix the Tablet Holder (D) to the underside of the Console using 6 cross-recessed countersunk head screws, and place the red Safety Key (E) onto the yellow area of the underside of the Console;

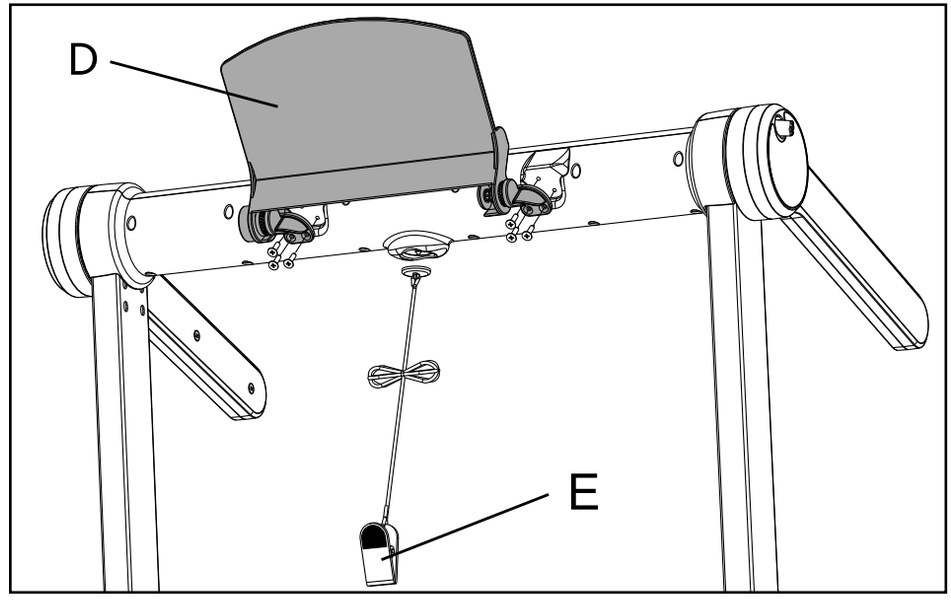

Adjust the angle of the Tablet Holder, as shown in the image, slide the back panel of the bracket in the direction of the arrow to adjust the angle, turning it to a suitable angle.

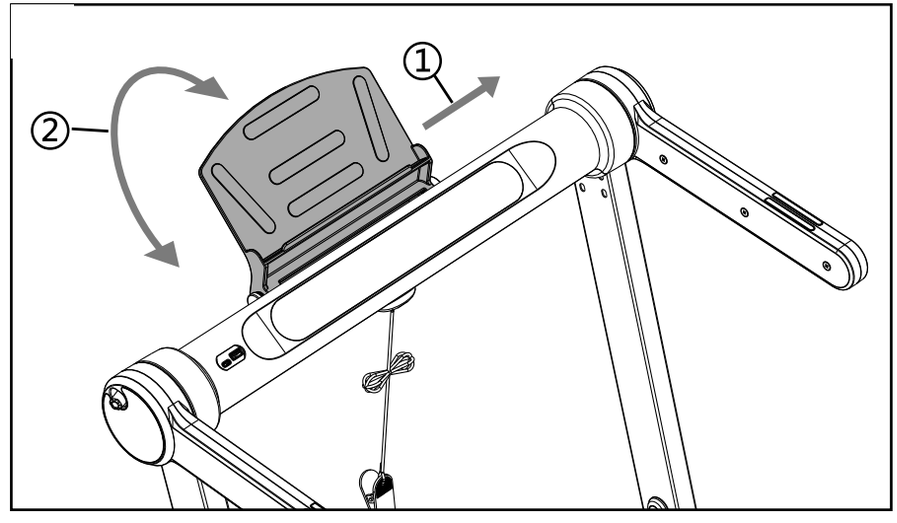

SETTING UP YOUR TREADMILL

Plugging in and Powering On

As shown in the figure below, insert the power cord into the socket on the right side of the treadmill. Plug in the power supply and turn on the power switch of the machine. The treadmill will now enter standby state.

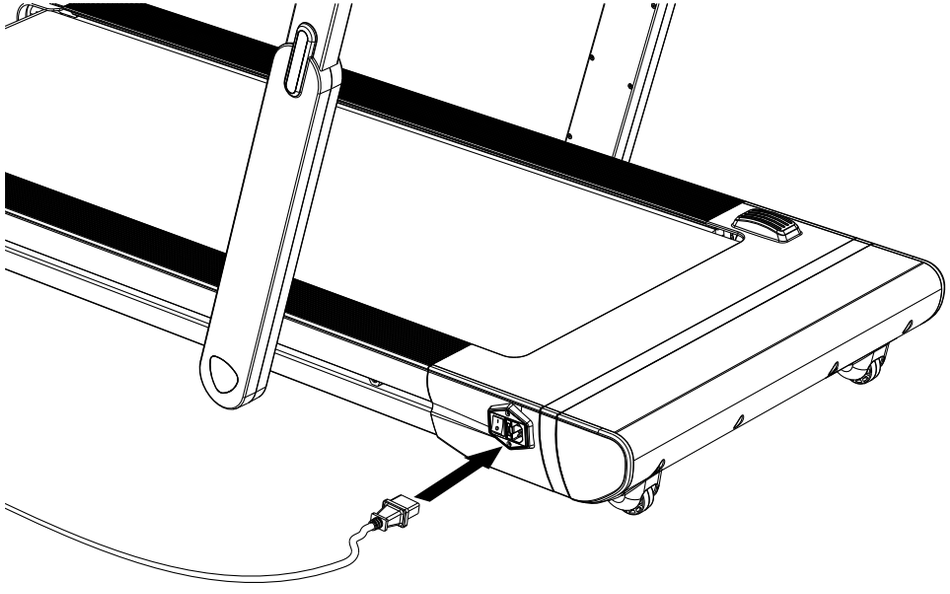

SETTING UP YOUR TREADMILL - CONTINUED

Folding Your Treadmill

As shown in step (A), press and hold the red button on the handle with your thumb, at the same time fold the handle in the direction of the arrow until the handle is locked, and release the button during the process of raising your hand; (the other side can do the same).

As shown in step (B), fold the Handlebar down and make it parallel to the running platform.

As shown in step (C), rotate the Handlebar Stoppers out so that the stopper catches the Upright.

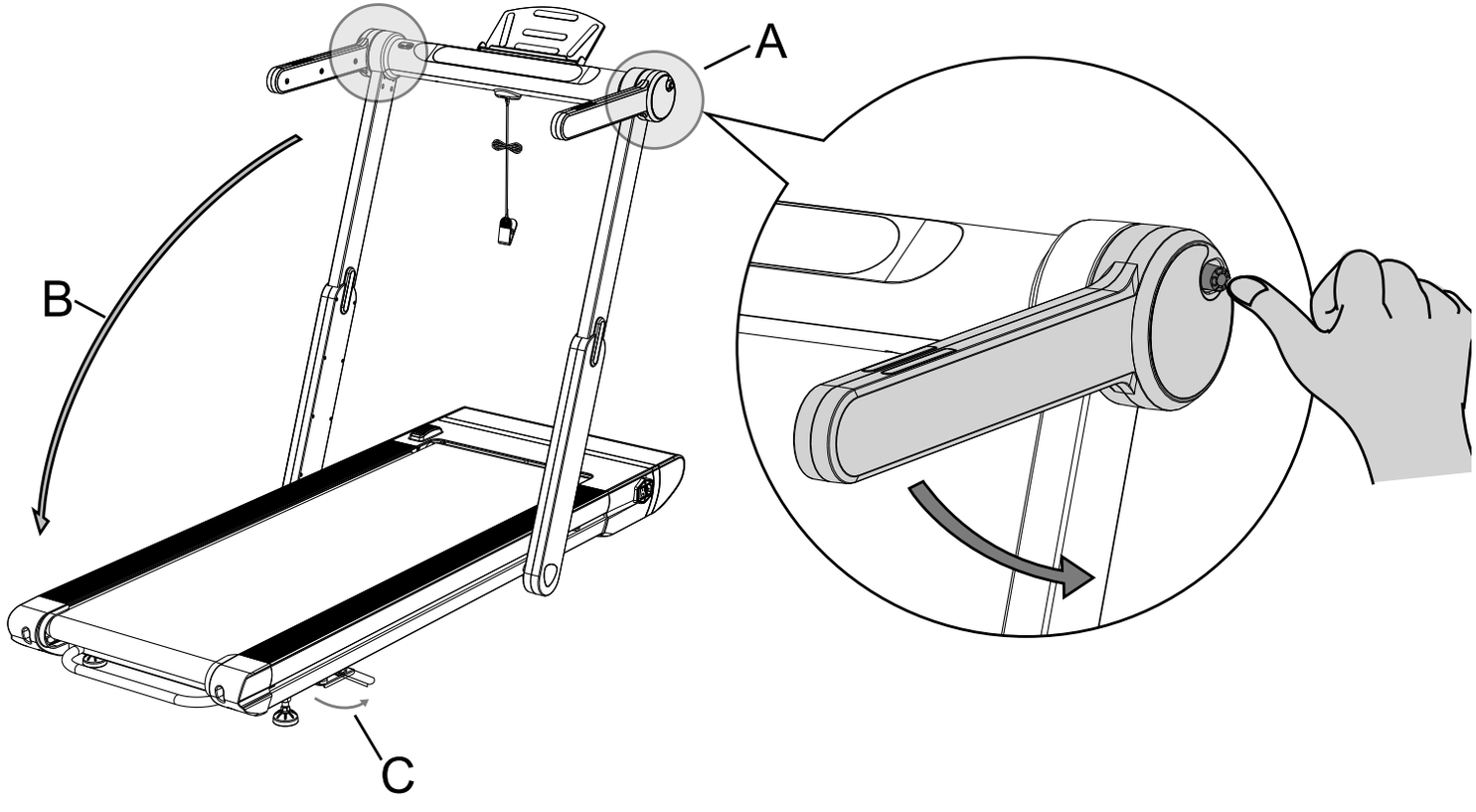

Moving Your Treadmill

Using the Rear Handlebar, lift from the base and roll the unit away.

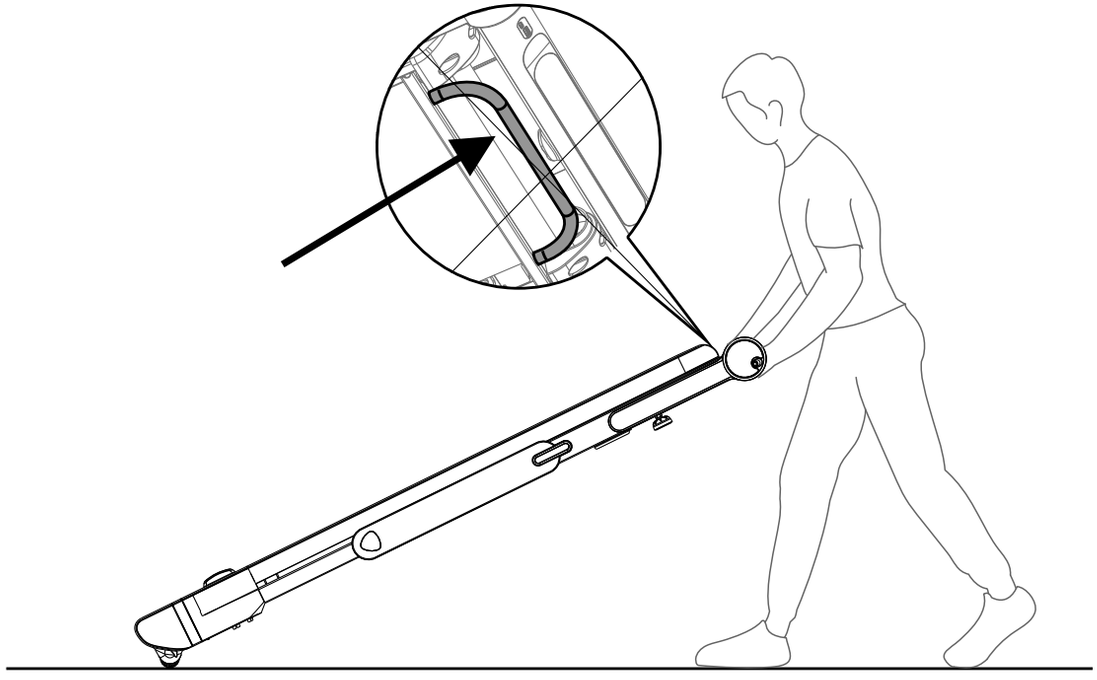

SAFETY STOP KEY

A safety tether cord is provided with this unit.
It is a simple magnetic design that should be used at all times.
It is for your safety should you fall or move too far back on the tread-belt.
Pulling this safety tether cord will stop tread-belt movement.

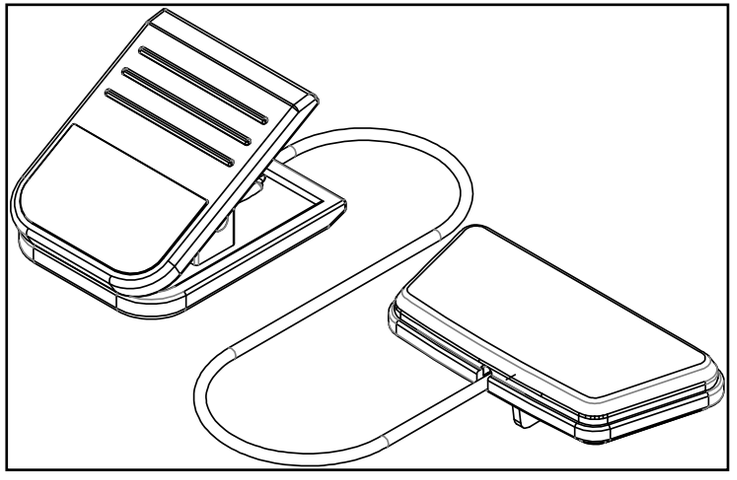

To Use:

1. Place the magnet into position on the round metal portion of the console control head. Your unit will not start and operate without this. Removing the magnet also secures the unit from unauthorized use.
2. Fasten the plastic clip onto your clothing securely to ensure good holding power. Note: The magnet has strong enough power to minimize accidental, unexpected stopping. The clip should be attached securely to make certain it does not come off. Be familiar with its function and limitations. The unit will stop, depending on speed, with a one to two step coast anytime the magnet is pulled off the console. Use the Stop / Pause switch in normal operation.
3. **Refer to page 8 for part# D as the safety stop key.**

ABOUT YOUR MACHINE

Always use care and caution when operating your machine. Follow instruction in this manual to ensure safe operation and maintenance of your treadmill

Your new XTERRA Fitness treadmill has Bluetooth connectivity to give you access to the most advanced workout experiences available. Follow the instructions on page 22 to learn more about using the Bluetooth capabilities to their fullest potential.

Downloading the XF Connect app will help unlock more features - such as tracking workouts and sharing data via Google Fit and Apple Fitness. Simply search for "XF Connect" in the app store on your smartphone or tablet, or scan the QR code on the right



The XF Connect app is available on Google Play and the Apple App Store. Scan the QR Code below, and quickly and easily sign up to start taking your workout experience to a whole new level.

Available on the App Store

GET IT ON Google play

Be sure to follow XTERRA Fitness on your favorite social media platforms to view and share the latest fitness videos, images, and news.

facebook.com/XterraFitness

www.instagram.com/XterraFitness

youtube.com/user/XterraFitnessOnline

CONSOLE SCREEN - OVERVIEW

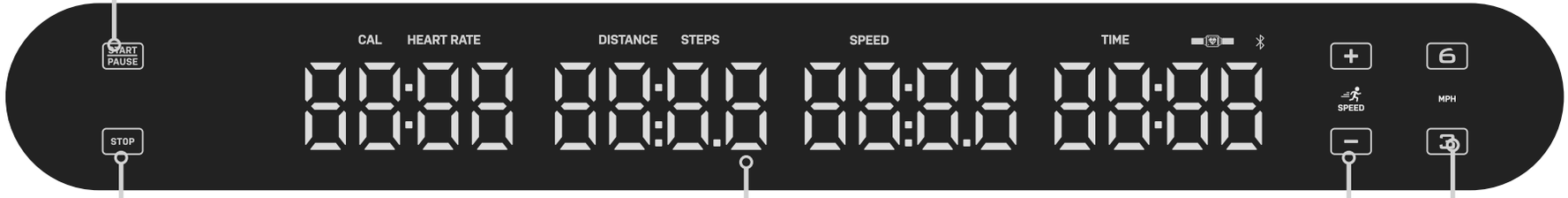

Start / Pause Button

Stop Button

Message Center

Speed Buttons

Direct Speed Buttons

WINDOW DISPLAY

Start/Pause/Resume: Short Press the button to start the treadmill, Press the button to pause or resume the treadmill during running.

Stop: short press the button to stop the treadmill during running.

Speed 3: During the running of the treadmill, short press the speed shortcut key to 3(Km/h or MPH).

Speed 6: During the running of the treadmill, short press the speed shortcut key to 6(Km/h or MPH).

Speed + : Short press or long press the “+” key during the running of the treadmill to increase the speed. The adjustment will be ineffective once the maximum speed limit is reached.

Speed - : Short press or long press the “-” key during the running of the treadmill to decrease the speed. The adjustment will be ineffective once the minimum speed limit is reached.

Display and Key Distribution Specs

The LED windows displays the following functions:

Window Display: Time, Speed, Distance, Calories, Heart Rate, Step Counting Display

Time Display Range: 0:00-99:59

Speed Display Range: 1.0-13.0 (Imperial System: 0.6-8.0mph)

Distance Display Range: 0.00-99.99

Calories Display Range: 0-9999

Heart Rate Display Range: 50-200

Steps Display Range: 0-9999

Quick Start

1. Put the safety key on the safety key position of the treadmill, turn on the power switch, the buzzer will sound, and the system will enter the standby state and display 0:00.
2. Press the “Start/Stop” button window to display a 3-2-1 countdown with a one second buzzer sound at each number, then the motor will start.
3. The starting speed is 0.6mph, at this time, you can press the speed +, - key to adjust the speed.

FUNCTIONS

Heart Rate Detection

Hold the heart rate grips with both hands for 3 to 5 seconds to display the heart rate value (50-200). If you hold the grips with one hand, the signal will be invalid.

Anti-Fall Function

The treadmill will only operate when the uprights are in the upright position. If they are folded down at any time during operation, then the treadmill will automatically stop in 3 seconds. For safety reasons, the treadmill cannot be used with the uprights folded down (as it was in the original carton).

Bluetooth FTMS Connection

Open the desired app (Zwift, Kinomap, etc). Click connect treadmill (Treadmill Bluetooth Name: WS200). The app will automatically search and connect the treadmill. If the connection times out, return to the previous round of operation.

Safety Lock Function

1. If the safety key is pulled off, the window displays “E07”, and the buzzer will beep continuously
2. When the treadmill is running, if the safety key is removed, “E07” is displayed in the window, the treadmill will stop in an emergency and cannot be started.

HOW TO USE THE TREADMILL

1. Turn on the power and check whether the machine is working properly.
2. The machine will begin at a speed of 1.0-13.0Km/h (0.6-8.0mph)
3. Clip the safety key into place on the console and to the front of your clothing.
4. Before exercise, ensure that the stability and function of the treadmill is normal. Do not stand on the running belt. Before running, stand on the left and right bars, hold the handrail, then press the “start” button. The treadmill will delay 3 seconds before starting. The treadmill will then start at .6 MPH. Now, step onto the running belt while holding onto the handlebar with at least one hand.
5. You can speed up running by pressing the “+” key. You can also press the - “key to slow it down.
6. If you need to pause your machine, you can press the “pause” key at any time to stop the motor. When you wish to resume, press the “pause” key again, the motion data will be superimposed in front of the data.
7. You can press the “stop” key at any time to stop the motor.
8. When running, press the “3, 6 speed” selection key to directly increase to that speed.

   Note: During exercise, if the safety key is pulled out, the belt will stop immediately, the console will refuse any operation, and the window displays “E07”.

USING THE XF CONNECT APP

In order to help you achieve your exercise goals, your new exercise machine comes equipped with a Bluetooth® transceiver that will allow it to interact with selected phones or tablet computers via the XF Connect App. Just download the free XF Connect App from the Apple Store or Google Play, and then follow the instructions in the App to sync with your exercise machine.

Press the “DISPLAY” button from the APP to view the display of the current workout data. When your exercise is complete, choose “END & SAVE WORKOUT” to store the workout data.

1. Download the App by scanning the QR code on the right.
2. Open the App on your device (phone or tablet) and make sure Bluetooth® is enabled on your device (phone or tablet).
3. In the App click the Bluetooth® icon to search for your XF Connect equipment.
4. Under the Bluetooth® scan result list, select the machine for connect. When the App and equipment are synced, the Bluetooth® icon on the equipment’s console display will light up. Click “DISPLAY”, you may now start using your XF Connect App.
5. When your exercise is complete, choose “END & SAVE WORKOUT” to store the workout data. You will be prompted to sync your data with each available fitness cloud site. Please note, you will have to download the applicable compatible fitness App, such as Strava, MapMyFitness, Fitbit, etc., in order for the icon to be active and available.

Note: Your device will need to be running on a minimum operating system of IOS 13.1 or Android 8.0 for the XF Connect App to operate properly.



BLUETOOTH HEART RATE CHEST STRAP* (NOT INCLUDED)

1. Attach the transmitter to the elastic strap using the interlocking key.
2. Adjust the strap as tightly as possible as long as the strap is not too tight to remain comfortable.
3. Position the transmitter with the logo centered in the middle of your torso facing away from your chest (some people must position the transmitter slightly left of center). Attach the final end of the elastic strap by inserting the round end and, using the locking parts, secure the transmitter and strap around your chest.
4. Position the transmitter directly below the pectoral muscles.
5. Sweat is the best conductor to measure very minute heart beat electrical signals. However, plain water can also be used to pre-wet the electrodes (2 ribbed oval areas on the reverse side of the belt and both sides of the transmitter). It's also recommended that you wear the transmitter strap a few minutes before your work out. Some users, because of body chemistry, have a more difficult time in achieving a strong, steady signal at the beginning. After "warming up", this problem lessens.
6. Your workout must be within range - distance between transmitter/receiver – to achieve a strong steady signal. The length of range may vary somewhat but generally stay close enough to the console to maintain good, strong, reliable readings. Wearing the transmitter directly on bare skin assures you of proper operation. If you wish, you may wear the transmitter over a shirt. To do so, wet the areas of the shirt that the electrodes will rest upon.

Note: The transmitter is automatically activated when it detects activity from the user's heart. Additionally, it automatically deactivates when it does not receive any activity. Although the transmitter is water resistant, moisture can have the effect of creating false signals, so you should take precautions to completely dry the transmitter after use to prolong battery life (estimated transmitter battery life is 2500 hours). The replacement battery is Panasonic CR2032.

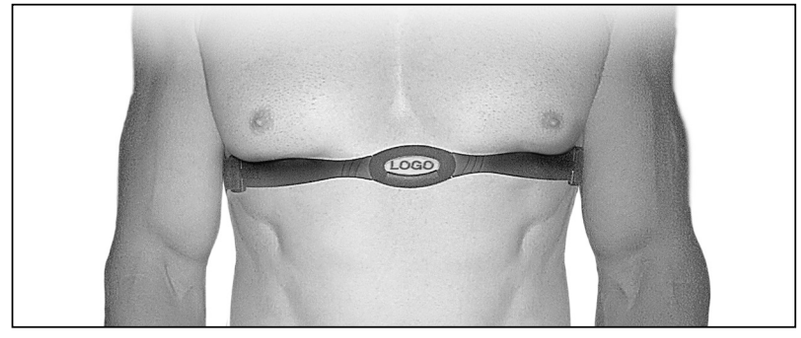

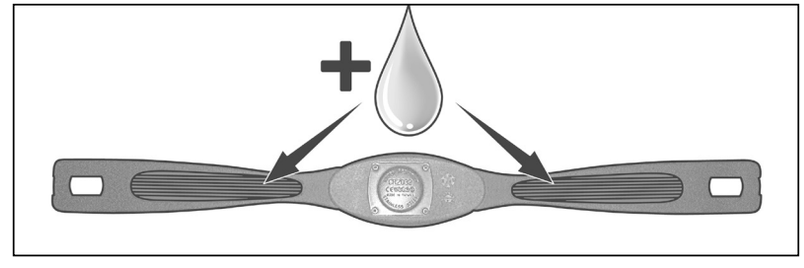

HEART RATE EXERTION

The old motto, “no pain, no gain”, is a myth that has been overpowered by the benefits of exercising comfortably. A great deal of this success has been promoted by the use of heart rate monitors. With the proper use of a heart rate monitor, many people find that their usual choice of exercise intensity was either too high or too low and exercise is much more enjoyable by maintaining their heart rate in the desired benefit range.

To determine the benefit range in which you wish to train, you must first determine your Maximum Heart Rate. This can be accomplished by using the following formula: 220 minus your age. This will give you the Maximum Heart Rate (MHR)for someone of your age. To determine the effective heart rate range for specific goals you simply calculate a percentage of your MHR. Your Heart rate training zone is 50% to 90% of your maximum heart rate. 60% of your MHR is the recommended for burning fat while 80% is recommended for strengthening the cardio vascular system. This 60% to 80% is the zone to stay in for maximum benefit.

For someone who is 40 years old their
target heart rate zone is calculated:
220 – 40 = 180 (maximum heart rate)
180 x .6 = 108 beats per minute (60% of maximum)
180 X .8 = 144 beats per minute (80% of maximum)
So for a 40 year old the training zone would
be 108 to 144 beats per minute.

If you enter your age during programming the console will perform this calculation automatically. Entering your age is used for the Heart Rate programs. After calculating your MHR you can decide upon which goal you would like to pursue.

The two most popular reasons for, or goals, of exercise are cardiovascular fitness (training for the heart and lungs) and weight control. The black columns on the chart represent the MHR for a person whose age is listed at the bottom of each column. The training heart rate, for either cardiovascular fitness or weight loss, is represented by two different lines that cut diagonally through the chart. A definition of the lines’ goal is in the bottom left-hand corner of the chart. If your goal is cardiovascular fitness or if it is weight loss, it can be achieved by training at 80% or 60%, respectively, of your MHR on a schedule approved by your physician. Consult your physician before participating in any exercise program.

With this Spirit Fitness unit you may use the heart rate monitor feature without using the Heart Rate program. However, when using the heart rate monitor feature in conjunction with the Heart Rate programs, the machine will automatically adjust speed or incline to maintain the desired heart rate.

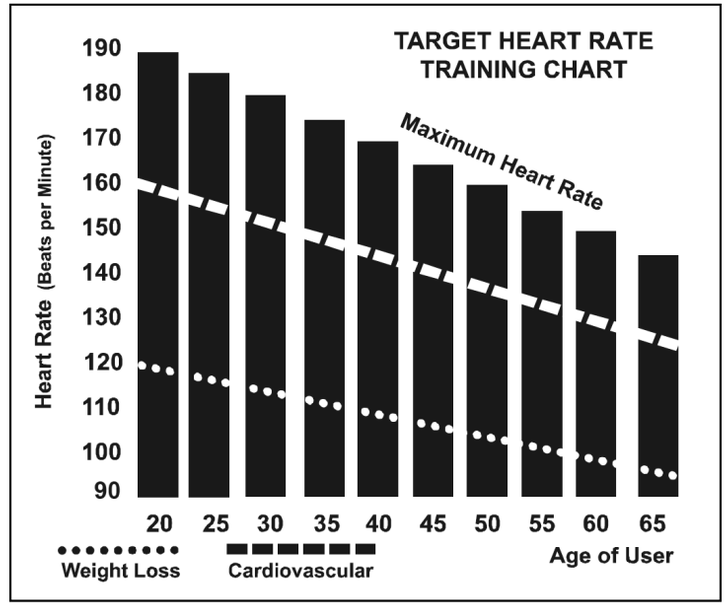

HEART RATE - PERCEIVED EXERTION

Heart rate is important but listening to your body also has a lot of advantages. There are more variables involved in how hard you should workout than just heart rate. Your stress level, physical health, emotional health, temperature, humidity, the time of day, the last time you ate and what you ate all contribute to the intensity at which you should workout. If you listen to your body it will tell you all of these things.

The rate of perceived exertion (RPE), also known as the Borg scale, was developed by Swedish physiologist G.A.V. Borg. This scale rates exercise intensity from 6 to 20 depending upon how you feel or the perception of your effort.
The scale is as follows:

Rating Perception of Effort

6	Minimal
7	Very, Very Light
8	Very, Very Light +
9	Very Light
10	Very Light +
11	Fairly Light
12	Comfortable
13	Somewhat Hard
14	Somewhat Hard +
15	Hard
16	Hard +
17	Very Hard
18	Very Hard +
19	Very, Very Hard
20	Maximal

You can get an approximate heart rate level for each rating by simply adding a zero to each rating. For example a rating of 12 will result in an approximate heart rate of 120 beats per minute. Your RPE will vary depending on the factors discussed earlier. If your body is strong and rested, you will feel strong and your pace will feel comfortable. When your body is in this condition, you are able to train harder and the RPE will support this. If you are feeling tired and sluggish, it is because your body needs a break. In this condition, your pace will feel difficult. Again, this will show up in your RPE and you will train at the proper level for that day.

MAINTENANCE & CARE

Post-Workout Machine Care

1. Store your machine according to the folding instructions when not in use.
2. Use a slightly damp cloth to clean areas where sweat or oil made contact with the machine.
3. Use a microfiber cloth to clean the display and remove unwanted oils and other things that may damage the screen.
4. Avoid leaving paper or other small debris in the cupholders.

General Cleaning

Dirt, dust, and hair can block air inlets and accumulate on the running belt. Please vacuum underneath your unit on a monthly basis to prevent excess build-up of dirt that can get sucked up and get into the inner workings under the motor cover. Every other month, you should remove the motor cover and carefully vacuum out dirt and hair that may accumulate.

UNPLUG THE POWER CORD BEFORE THIS TASK.

Sanitizing Your XTERRA Fitness Equipment

- Unupholstered high-contact surfaces (hard plastics) can be sanitized using a 75% isopropyl alcohol solution and a clean, dry cloth. Spray surfaces to be sanitized, and use the dry cloth to wipe clean. Allow surfaces to dry before using.
- For upholstered or soft-plastic surfaces, use a conditioner after sanitizing. Be sure to follow the instructions provided by the conditioner manufacturer to ensure proper use of the conditioner.
- Alternatively, you can make your own spray by mixing the proper ratio of isopropyl alcohol and distilled water to reach a 75% solution.

MAINTENANCE & CARE - CONTINUED

Belt Adjustments

If running belt slips while walking on it, users can adjust tension of the running belt by turning screws on rear rollers of both sides with 5mm Allen Wrench, which is included in hardware kit.

PS . During adjustment, while turning rear rollers' screws, be sure to keep running belt tension balanced on both sides, otherwise the belt shifts from higher tension end to the other.

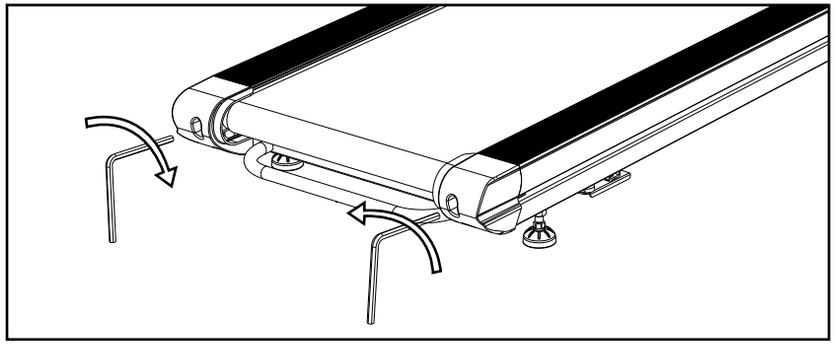

DO NOT OVERTIGHTEN – Over tightening will cause belt damage and premature bearing failure. If you tighten the belt a lot and it still slips, the problem could actually be the drive belt - located under the motor cover - that connects the motor to the front roller. If that belt is loose it feels similar to the walking belt being loose. Tightening the motor belt should be done by a trained service person.

DECK LUBRICATION

To ensure the longevity and proper function of your treadmill, proper belt maintenance is required. You should regularly check between the treadmill belt and the top of the treadmill base for proper lubrication, and to ensure that no dirt or debris has become trapped. Keeping the deck clean and lubricated at the recommended intervals ensures the longest life possible for your unit. Should lubrication dry out, or dirt become trapped, the friction between the belt and deck increases. Increased friction places undue stress on the drive motor, drive belt, and electronic motor control board which could result in catastrophic failure of these essential, expensive components.

Failure to clean and lubricate the deck at regular intervals may void the warranty.

As a part of your routine maintenance schedule, belt lubrication and cleaning should be performed every 90 days, after 90 hours of use, or earlier if you notice that the deck is dry or dirty. Please also be sure to check belt lubrication before first use.

Do not lubricate with anything other than XTERRA Fitness approved lubricant. Your treadmill comes with one tube of treadmill belt lubricant.

Extra tubes can be ordered directly from: www.Xterrafitness.com, or by calling our customer service department at (800)258-8511.

To lubricate your treadmill belt:

1. Turn the power switch off and unplug the power cord from the wall outlet.
2. Measure 18” from the edge of the motor cover; kneel down and reach under the belt approximately 4-6” from one edge. Squirt a line of lubricant about 1/8” wide x 15” long in an “S” pattern perpendicular to the motor cover.
3. Repeat the process on the opposite side.
4. Plug the electrical cord back into the outlet and turn the power switch on.
5. Walk on the belt at a moderate speed for five minutes to evenly distribute the silicone lube.

Regularly check belt lubrication by completing the following steps:

1. Ensure that your machine is off, and that the power cord is unplugged to minimize risk of injury.
2. Reach between the running belt and the top of the treadmill base to verify that lubrication is present.

BELT AND DECK CLEANING

Belt & Deck Cleaning

To clean your treadmill belt:

1. Ensure that your machine is off, and that the power cord is unplugged to minimize risk of injury.
2. Grab one edge of the treadmill belt, and lift slightly to expose the area between the top of the treadmill base and the running belt.
3. Do a visual check for any dirt or debris accumulation.
4. Should dirt and debris be present, slide a towel or cleaning cloth between the treadmill belt and top of the treadmill base until you can grasp one end on each side. (The cleaning cloth should be longer than the running belt is wide to achieve this.)
5. Using both hands, drag the cleaning cloth up and down the length of the treadmill base 1-2 times.
6. For excessive dirt accumulation, rotate the belt halfway, and repeat step 5. Continue until your cleaning cloth is no longer picking up any dirt.
7. Remove cleaning cloth from treadmill before plugging back in.

EXPLODED VIEW DIAGRAM

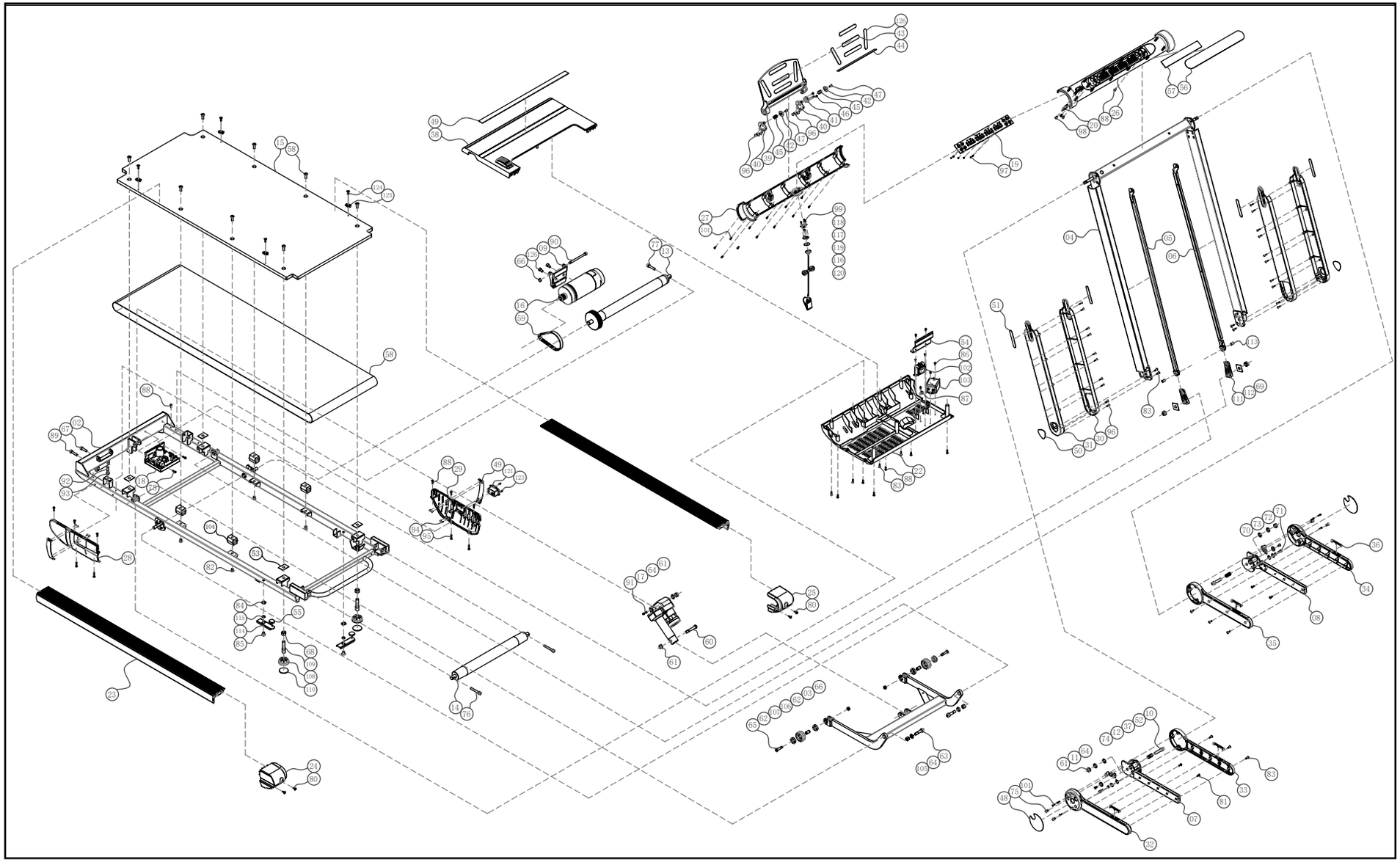

WARRANTY - RESIDENTIAL

Effective August 07 2023- **WS200 Treadmill LIMITED WARRANTY**

XTERRA Fitness Inc. warrants all its home use treadmill parts for a period of time listed below, from the date of retail sale, as determined by a sales receipt or in the absence of a sales receipt, eighteen (18) months from the original factory shipping date. XTERRA Fitness's responsibilities include providing new or remanufactured parts, at XTERRA Fitness's option, and technical support to our independent dealers and servicing organizations. In the absence of a dealer or service organization, these warranties will be administered by XTERRA Fitness directly to a consumer. The warranty period applies to the following components:

Home Use Limited Warranty

Warranty	Frame	Parts	Labor
Residential	Lifetime	90 Days	90 Days

RESPONSIBILITIES OF THE CONSUMER

This warranty applies only to products in ordinary household use, and the consumer/facility is responsible for the items listed below:

1. Proper use of the treadmill in accordance with the instructions provided in this manual
2. Proper installation in accordance with instructions provided with the treadmill and with all local electric codes.
3. Expenses for making the treadmill accessible for servicing, including any item that was not part of the treadmill at the time it was shipped from the factory.
4. Damages to the treadmill finish during shipping, installation or following installation.
5. Routine maintenance of this unit as specified in this manual.

WARRANTY - CONTINUED

What is not covered?

EXCLUSIONS

This warranty does not cover the following:

1. CONSEQUENTIAL, COLLATERAL, OR INCIDENTAL DAMAGES SUCH AS PROPERTY DAMAGE AND INCIDENTAL EXPENSES RESULTING FROM ANY BREACH OF THIS WRITTEN OR ANY IMPLIED WARRANTY.
   Note: Some states do not allow the exclusion or limitation of incidental or consequential damages, so this limitation or exclusion may not apply to you.
2. Service call reimbursement to the consumer. Service call reimbursement to the dealer that does not involve malfunction or defects in workmanship or material, for units that are beyond the warranty period, for units that are beyond the service call reimbursement period, for treadmill not requiring component replacement, or treadmill not in ordinary household or light commercial use.
3. Damages caused by services performed by persons other than authorized XTERRA Fitness service companies; use of parts other than original XTERRA Fitness parts; or external causes such as corrosion, discoloration of paint or plastic, alterations, modifications, abuse, misuse, accident, improper maintenance, inadequate power supply, or acts of God.
4. Products with original serial numbers that have been removed or altered.
5. Products that have been: sold, transferred, bartered, or given to a third party.
6. XTERRA Fitness reserves the right to request proof of purchase if no warranty record exists for the product.
7. THIS WARRANTY IS EXPRESSLY IN LIEU OF ALL OTHER WARRANTIES EXPRESSED OR IMPLIED, INCLUDING THE WARRANTIES OF MERCHANTABILITY AND/OR FITNESS FOR A PARTICULAR PURPOSE.
8. Product use in any environment other than a residential setting or non-dues paying facility with 5 hours use or less per day.
9. Warranties outside of the United States may vary. Please contact your local dealer for details.

Product features or specifications as described or illustrated are subject to change without notice. All warranties are made by XTERRA Fitness, Inc. This warranty applies only in the 48 contiguous United States. NOTE: This does not include Alaska or Hawaii.

WARRANTY - CONTINUED

Responsibilities of the Owner

SERVICE

Keep your bill of sale. Twelve (12) months from the date on the bill of sale or eighteen (18) months from the date of factory shipping as determined by the serial number establishes the labor warranty period should service be required. If service is performed, it is in your best interest to obtain and keep all receipts. This written warranty gives you specific legal rights. You may also have other rights that vary from state to state. Service under this warranty must be obtained by following these steps, in order:

1. Contact your selling authorized XTERRA Fitness dealer. OR
2. Contact your local authorized XTERRA Fitness service organization.
3. If there is a question as to where to obtain service, contact our service department at (870) 935-1107.
4. XTERRA Fitness' obligation under this warranty is limited to repairing or replacing, at XTERRA Fitness' option, the product through one of our authorized service centers. All repairs must be preauthorized by XTERRA Fitness. If the product is shipped to a service center freight charges to and from the service center will be the customer's responsibility. For replacement parts shipped while the product is under warranty, the customer will be responsible for shipping and handling charges. For in-home service, the customer will be responsible for a trip charge. There will be an additional trip charge if the customer is located over 100 miles from the nearest service center.
5. The owner is responsible for adequate packaging upon return to XTERRA Fitness. XTERRA Fitness is not responsible for damages in shipping. Make all freight damage claims with the appropriate freight carrier. DO NOT SHIP ANY UNIT TO OUR FACTORY WITHOUT A RETURN AUTHORIZATION NUMBER. All units arriving without a return authorization number will be refused.

For any further information, or to contact our service department by mail, send your correspondence to:

XTERRA Fitness, Inc.

P.O. Box 2037

Jonesboro, AR 72402-2037

Product features or specifications as described or illustrated are subject to change without notice. All warranties are made by XTERRA Fitness, Inc. This warranty applies only in the 48 contiguous United States. NOTE: This does not apply to Alaska or Hawaii.

TROUBLESHOOTING

Questions	Possible Causes	Maintenance Methods
Treadmill does not work	Not connected	Put plug to insert socket
	Power is not turned on	Put the power switch in "On" Position
	Safety key drop	Put the safety key in correct position
	Circuit signal system Break	Check the controller input terminal and signal circuit
	The fuse blew out	Replace fuse
The running belt doesn't run smoothly	Insufficient lubrication	Add silicone oil lubricant
	Running belt is too tight	Adj ust running belt tightness
Running belt slipped	Running belt too loose	Adj ust running belt tightness
	Motor belt is too loose	Adj ust motor belt tightness

TROUBLESHOOTING - CONTINUED

Questions	Possible Cause	Method
E01	Poor communication	The signal line is not plugged, plug it again
E02	Power assault	Power tube breakdown, replace the electronic controller
E03	Non-sensing signal	Sensing wire is not plugged in properly. Plug it again correctly
E04	Controller or motor abnormal	Overload, replace controller or motor
E05	Overload protection	Overload, replace controller
E06	System self-check failed	System failure, replace controller
E07	Safety lock is not in place	Put the safety key in correct position
Abnormal display	External disturbance	Turn off power switch, turn it on after 1 minute

FCC WARNING

This device complies with part 15 of the FCC Rules. Operation is subject to the following two conditions: (1) This device may not cause harmful interference, and (2) this device must accept any interference received, including interference that may cause undesired operation.
Note: This equipment has been tested and found to comply with the limits for a Class B digital device, pursuant to part 15 of the FCC Rules. These limits are designed to provide reasonable protection against harmful interference in a residential installation. This equipment generates, uses and can radiate radio frequency energy and, if not installed and used in accordance with the instructions, may cause harmful interference to radio communications. However, there is no guarantee that interference will not occur in a particular installation. If this equipment does cause harmful interference to radio or television reception, which can be determined by turning the equipment off and on, the user is encouraged to try to correct the interference by one or more of the following measures:

- Reorient or relocate the receiving antenna.
- Increase the separation between the equipment and receiver.
- Connect the equipment into an outlet on a circuit different from that to which the receiver is connected.
- Consult the dealer or an experienced radio/TV technician for help.

Note: The Grantee is not responsible for any changes or modifications not expressly approved by the party responsible for compliance. Such modifications could void the user's authority to operate the equipment.

The device has been evaluated to meet general RF exposure requirement.
To maintain compliance with FCC's RF exposure guidelines, the distance must be at least 20cm between the radiator and your body, and fully supported by the operating and installation

3000 Nestle Road Jonesboro, AR 72401 | Phone: 800-258-8511 | Fax: 870-935-7611

©2023 All Rights Reserved. WS200 Owner's Manual